PD IEC/TR 60865-2:2015

BSI Standards Publication

Short-circuit currents — Calculation of effects

Part 2: Examples of calculation

bsi.

...making excellence a habit.™

Document Sharing Hub

National foreword

This Published Document is the UK implementation of IEC/TR 60865-2:2015. It supersedes PD 6575-2:1995 which is withdrawn.

The UK participation in its preparation was entrusted to Technical Committee PEL/73, Short circuit currents.

A list of organizations represented on this committee can be obtained on request to its secretary.

This publication does not purport to include all the necessary provisions of a contract. Users are responsible for its correct application.

© The British Standards Institution 2015.
Published by BSI Standards Limited 2015

ISBN 978 0 580 84957 2
ICS 17.220.01; 29.020; 29.240.20

Compliance with a British Standard cannot confer immunity from legal obligations.

This Published Document was published under the authority of the Standards Policy and Strategy Committee on 31 May 2015.

Amendments/corrigenda issued since publication

Date	Text affected

Documents
Document Sharing Hub

Full document details: PD IEC/TR 60865-2:2015

IEC TR 60865-2

Edition 2.0 2015-04

TECHNICAL REPORT

Short-circuit currents – Calculation of effects – Part 2: Examples of calculation

INTERNATIONAL
ELECTROTECHNICAL
COMMISSION

ICS 17.220.01; 29.240.20

ISBN 978-2-8322-2551-6

Warning! Make sure that you obtained this publication from an authorized distributor.

® Registered trademark of the International Electrotechnical Commission

Documents
Document Sharing Hub

Full document details: PD IEC/TR 60865-2:2015

CONTENTS

FOREWORD 5
1 Scope 7
2 Normative references 7
3 Symbols and units 7
4 Example 1 – Mechanical effects on a 10 kV arrangement with single rigid conductors 8
4.1 General 8
4.2 Data 9
4.3 Normal load case: Conductor stress and forces on the supports caused by dead load 9
4.4 Exceptional load case: Effects of short-circuit currents 10
4.4.1 Maximum force on the central main conductor 10
4.4.2 Conductor stress and forces on the supports 11
4.5 Conclusions 13
5 Example 2 – Mechanical effects on a 10 kV arrangement with multiple rigid conductors 14
5.1 General 14
5.2 Data (additional to the data of Example 1) 14
5.3 Normal load case: Conductor stress and forces on the supports caused by dead load 15
5.4 Exceptional load case: Effects of short-circuit currents 15
5.4.1 Maximum forces on the conductors 15
5.4.2 Conductor stress and forces on the supports 16
5.5 Conclusions 20
6 Example 3. – Mechanical effects on a high-voltage arrangement with rigid conductors 20
6.1 General 20
6.2 Data 21
6.3 Normal load case: Conductor stress and forces on the supports caused by dead load 22
6.4 Exceptional load case: Effects of short-circuit currents 23
6.4.1 Maximum force on the central main conductor 23
6.4.2 Conductor stress and forces on the supports 23
6.4.3 Conclusions 29
7 Example 4. – Mechanical effects on a 110 kV arrangement with slack conductors 30
7.1 General 30
7.2 Data 31
7.3 Electromagnetic load and characteristic parameters 32
7.4 Tensile force $F_{t,d}$ during short-circuit caused by swing out 34
7.5 Dynamic conductor sag at midspan 35
7.6 Tensile force $F_{f,d}$ after short-circuit caused by drop 36
7.7 Horizontal span displacement b_h and minimum air clearance a_{min} 36
7.8 Conclusions 36
8 Example 5. – Mechanical effects on strained conductors 37
8.1 General 37
8.2 Common data 37
8.3 Centre-line distance between sub-conductors a_s = 0,1 m 38

Documents
Document Sharing Hub
Full document details: PD IEC/TR 60865-2:2015

8.3.1 Electromagnetic load and characteristic parameters 38
8.3.2 Tensile force $F_{t,d}$ during short-circuit caused by swing out 41
8.3.3 Dynamic conductor sag at midspan 41
8.3.4 Tensile force $F_{f,d}$ after short-circuit caused by drop 42
8.3.5 Horizontal span displacement b_h and minimum air clearance a_{min} 43
8.3.6 Pinch force $F_{pi,d}$ 43
8.3.7 Conclusions 43
8.4 Centre-line distance between sub-conductors a_s = 0,4 m 44
8.4.1 Preliminary remarks 44
8.4.2 Characteristic dimensions and parameters 44
8.4.3 Pinch force $F_{pi,d}$ 45
8.4.4 Conclusions 47
9 Example 6 – Mechanical effects on strained conductors with dropper in the middle of the span 47
9.1 General 47
9.2 Common data 48
9.3 Plane of the dropper parallel to the main conductors 48
9.3.1 General 48
9.3.2 Current flow along the whole length of the main conductor span 49
9.3.3 Current flow along half of the length of the main conductor and along the dropper 57
9.4 Plane of the dropper perpendicular to the main conductors 64
9.4.1 General 64
9.4.2 Current flow along the whole length of the main conductor span 64
9.4.3 Current flow along half of the length of the main conductor and along the dropper 69
10 Example 7 – Mechanical effects on vertical main conductors (droppers) 77
10.1 General 77
10.2 Data 77
10.3 Short-circuit tensile force and maximum horizontal displacement 78
10.4 Pinch force 78
10.4.1 Static tensile force regarding droppers 78
10.4.2 Characteristic dimensions and parameters 79
10.4.3 Pinch force $F_{pi,d}$ 80
10.5 Conclusions 81
11 Example 8 – Thermal effect on bare conductors 81
11.1 General 81
11.2 Data 81
11.3 Calculations 82
11.4 Conclusion 82
Bibliography 83

Figure 1 – Conductor arrangement 8
Figure 2 – Position of the sub-conductors and connecting pieces 14
Figure 3 – Two-span arrangement with tubular conductors 21
Figure 4 – Arrangement with slack conductors 31
Figure 5 – Arrangement with strained conductors 37
Figure 6 – Arrangement with strained conductors and droppers in midspan. Plane of the droppers parallel to the main conductors 47

AVA Documents
Document Sharing Hub

Figure 7 – Possible arrangement of perpendicular droppers in three-phase system and two-line system 64
Figure 8 – Arrangement with strained conductors 77

Documents
Document Sharing Hub
Full document details: PD IEC/TR 60865-2:2015

INTERNATIONAL ELECTROTECHNICAL COMMISSION

SHORT-CIRCUIT CURRENTS – CALCULATION OF EFFECTS

Part 2: Examples of calculation

FOREWORD

1) The International Electrotechnical Commission (IEC) is a worldwide organization for standardization comprising all national electrotechnical committees (IEC National Committees). The object of IEC is to promote international co-operation on all questions concerning standardization in the electrical and electronic fields. To this end and in addition to other activities, IEC publishes International Standards, Technical Specifications, Technical Reports, Publicly Available Specifications (PAS) and Guides (hereafter referred to as "IEC Publication(s)"). Their preparation is entrusted to technical committees; any IEC National Committee interested in the subject dealt with may participate in this preparatory work. International, governmental and non-governmental organizations liaising with the IEC also participate in this preparation. IEC collaborates closely with the International Organization for Standardization (ISO) in accordance with conditions determined by agreement between the two organizations.
2) The formal decisions or agreements of IEC on technical matters express, as nearly as possible, an international consensus of opinion on the relevant subjects since each technical committee has representation from all interested IEC National Committees.
3) IEC Publications have the form of recommendations for international use and are accepted by IEC National Committees in that sense. While all reasonable efforts are made to ensure that the technical content of IEC Publications is accurate, IEC cannot be held responsible for the way in which they are used or for any misinterpretation by any end user.
4) In order to promote international uniformity, IEC National Committees undertake to apply IEC Publications transparently to the maximum extent possible in their national and regional publications. Any divergence between any IEC Publication and the corresponding national or regional publication shall be clearly indicated in the latter.
5) IEC itself does not provide any attestation of conformity. Independent certification bodies provide conformity assessment services and, in some areas, access to IEC marks of conformity. IEC is not responsible for any services carried out by independent certification bodies.
6) All users should ensure that they have the latest edition of this publication.
7) No liability shall attach to IEC or its directors, employees, servants or agents including individual experts and members of its technical committees and IEC National Committees for any personal injury, property damage or other damage of any nature whatsoever, whether direct or indirect, or for costs (including legal fees) and expenses arising out of the publication, use of, or reliance upon, this IEC Publication or any other IEC Publications.
8) Attention is drawn to the Normative references cited in this publication. Use of the referenced publications is indispensable for the correct application of this publication.
9) Attention is drawn to the possibility that some of the elements of this IEC Publication may be the subject of patent rights. IEC shall not be held responsible for identifying any or all such patent rights.

The main task of IEC technical committees is to prepare International Standards. However, a technical committee may propose the publication of a technical report when it has collected data of a different kind from that which is normally published as an International Standard, for example "state of the art".

IEC TR 60865-2, which is a technical report, has been prepared by IEC technical committee 73: Short-circuit currents.

This second edition cancels and replaces the first edition published in 1994. This edition constitutes a technical revision.

This edition includes the following significant technical changes with respect to the previous edition.

a) The determinations for auto reclosure together with rigid conductors have been revised.

AVA Documents
Document Sharing Hub

Full document details: PD IEC/TR 60865-2:2015

b) The configurations in cases of flexible conductor arrangements have been changed.

c) The influence of mid-span droppers to the span has been included.

d) For vertical cable-connection the displacement and the tensile force onto the lower fixing point may be calculated now.

e) Additional recommendations for foundation loads due to tensile forces have been added.

f) The subclause for determination of the thermal equivalent short-circuits current has been deleted (is part of IEC 60909-0:2001 now).

g) The standard IEC 60865-1:2011 has been reorganized and some of the symbols have been changed to follow the conceptual characteristic of international standards.

The text of this technical report is based on the following documents:

Enquiry draft	Report on voting
73/168/DTR	73/173/RVC

Full information on the voting for the approval of this technical report can be found in the report on voting indicated in the above table.

This publication has been drafted in accordance with the ISO/IEC Directives, Part 2.

A list of all parts in the IEC 60865 series, published under the general title *Short-circuit currents – Calculations of effects*, can be found on the IEC website.

The committee has decided that the contents of this publication will remain unchanged until the stability date indicated on the IEC website under "http://webstore.iec.ch" in the data related to the specific publication. At this date, the publication will be

- reconfirmed,
- withdrawn,
- replaced by a revised edition, or
- amended.

A bilingual version of this publication may be issued at a later date.

Documents
Document Sharing Hub

Full document details: PD IEC/TR 60865-2:2015

SHORT-CIRCUIT CURRENTS – CALCULATION OF EFFECTS

Part 2: Examples of calculation

1 Scope

The object of this part of IEC 60865, which is a Technical Report, is to show the application of procedures for the calculation of mechanical and thermal effects due to short circuits as presented in IEC 60865-1. Thus, this technical report is an addition to IEC 60865-1. It does not, however, change the basis for standardized procedures given in that publication.

The following points should particularly be noted:

a) The examples in this Technical Report illustrate how to make the calculations according to IEC 60865-1 in a simplified and easy-to-follow manner. They are not intended as a check for computer programs.

b) The numbers in parentheses at the end of the equations refer to the equations in IEC 60865-1:2011.

c) The system voltages are referred to as nominal voltages.

d) The results are rounded to three significant digits.

e) Short-circuit effects appear as exceptional load in addition to the mechanical loads of the normal operation of a switchgear. In the following examples with rigid conductors, a possible static preloading is therefore calculated too. Depending on whether it concerns the load of the normal operation or the load during the short-circuit different safety factors come to use. The height of these factors has been chosen typically and is recommended for the use. However, other safety factors may be necessary depending on the safety concept.

2 Normative references

IEC 60865-1:2011, *Short-Circuit Currents – Calculation of Effects – Part 1: Definitions and calculation methods*

IEC 60909-0:2001, *Short-circuit currents in three-phase AC systems – Part 0: Calculation of currents*

3 Symbols and units

For symbols and units, reference is made to IEC 60865-1:2011.

In addition, the following symbols are used:

$F_{\mathrm{str,k}}$	Dead load (characteristic value)	N
$F_{\mathrm{str,d}}$	Dead load (design value)	N
$F_{\mathrm{st,r,d}}$	Force on support of rigid conductors (design value) due to dead load	N
h_{S}, h_{I}	Height of the substructure, insulator	m
H_{s}	Horizontal component of the force at the lower fixing point of one sub-conductor of a dropper	N

Documents
Document Sharing Hub
Full document details: PD IEC/TR 60865-2:2015

$J_{st,m}$	Second moment of main conductor area with respect to the direction of the dead load	m^4
I_k	Steady-state short-circuit current (r.m.s) according to IEC 60909-0	A
l_{eff}	Effective length of a span	m
l_f	Form factor of a span	m
l_h	Extend of one head armature and clamp	m
m, n	Factor for heat effect of the d.c. component and a.c. component	1
$M_{S,d}$, $M_{I,d}$	Bending moment on the bottom on the substructure, insulator (design value)	Nm
V_s	Vertical component of the force at the upper fixing point of one sub-conductor of a dropper	N
$W_{st,m}$	Section modulus of main conductor with respect to the direction of the dead load	m^3
γ_F	Partial safety factor for action	1
γ_M	Partial safety factor for material property	1
$\sigma_{st,m,d}$	Bending stress caused by the dead load (design value)	N/m^2
$\sigma_{st,m,k}$	Bending stress caused by the dead load (characteristic value)	N/m^2

4 Example 1 – Mechanical effects on a 10 kV arrangement with single rigid conductors

4.1 General

The basis for the calculation in this example is a three-phase 10 kV busbar with one conductor per phase. The conductors are continuous beams with equidistant simple supports. The conductor arrangement is shown in Figure 1. According to IEC 61936-1 [1][1], the calculation is done for the normal load case considering the dead load of the busbar and the exceptional load case considering the combination of effects of short-circuit currents and dead load.

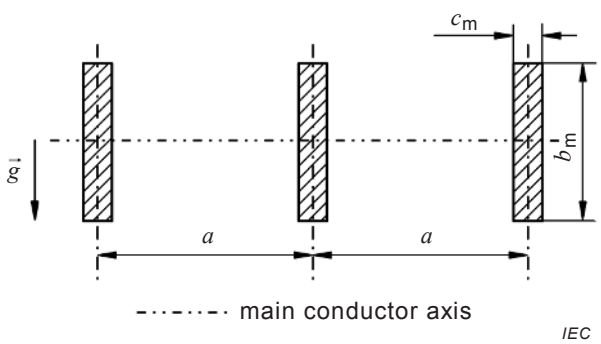

Figure 1 – Conductor arrangement

1 The numbers in square brackets refer to the Bibliography.

Documents
Document Sharing Hub
Full document details: PD IEC/TR 60865-2:2015

4.2 Data

Initial symmetrical three-phase short-circuit current (r.m.s.)	I''_k	=	16 kA
Factor for the calculation of the peak short-circuit current	κ	=	1,35
System frequency	f	=	50 Hz
No automatic reclosing			
Number of spans		≥	3
Centre-line distance between supports	l	=	1 m
Centre-line distance between conductors	a	=	0,2 m
Rectangular conductor EN AW-6101B T7			
– Dimensions	b_m	=	60 mm
	c_m	=	10 mm
– Mass per unit length of main conductor	m'_m	=	1,62 kg/m
– Young's modulus	E	=	70 000 N/mm^2
– Stress corresponding to the yield point	f_y	=	120 N/mm^2 to 180 N/mm^2
Conventional value of acceleration of gravity	g	=	9,81 m/s^2
Partial safety factors; for example according to EN 1990 [2]			
– Normal load case	γ_F	=	1,35
	γ_M	=	1,1
– Exceptional load case	$\gamma_F\ \gamma_M$	=	1,0

NOTE Safety factors differ in national standards.

4.3 Normal load case: Conductor stress and forces on the supports caused by dead load

The dead load on the conductor is:

$$F_{str,k} = m'_m\, l\, g = 1{,}62\,\frac{\text{kg}}{\text{m}} \cdot 1{,}00\ \text{m} \cdot 9{,}81\,\frac{\text{m}}{\text{s}^2} = 15{,}9\ \text{N}$$

$$F_{str,d} = \gamma_F\, F_{str,k} = 1{,}35 \cdot 15{,}9\ \text{N} = 21{,}5\ \text{N}$$

The conductor bending stress is:

$$\sigma_{st,m,k} = \frac{F_{str,k}\, l}{8\, W_{st,m}} = \frac{15{,}9\ \text{N} \cdot 1{,}00\ \text{m}}{8 \cdot 6 \cdot 10^{-6}\ \text{m}^3} = 0{,}33 \cdot 10^6\ \text{N/m}^2 = 0{,}33\ \text{N/mm}^2$$

$$\sigma_{st,m,d} = \gamma_F\, \sigma_{st,m,k} = 1{,}35 \cdot 0{,}33\ \text{N/mm}^2 = 0{,}45\ \text{N/mm}^2$$

with

Documents
Document Sharing Hub
Full document details: PD IEC/TR 60865-2:2015

$$J_{\mathrm{st,m}} = \frac{c_{\mathrm{m}} b_{\mathrm{m}}^3}{12} = \frac{0{,}010 \cdot 0{,}060^3}{12}\ \mathrm{m}^4 = 1{,}8 \cdot 10^{-7}\ \mathrm{m}^4$$

$$W_{\mathrm{st,m}} = \frac{J_{\mathrm{st,m}}}{b_{\mathrm{m}}/2} = \frac{1{,}8 \cdot 10^{-7}\ \mathrm{m}^4}{0{,}03\ \mathrm{m}} = 6 \cdot 10^{-6}\ \mathrm{m}^3$$

NOTE The equation for the calculation of $\sigma_{\mathrm{st,m,k}}$ gives the maximum value for two spans. The actual value for three or more spans is slightly lower.

The conductors have sufficient strength if

$$\sigma_{\mathrm{st,m,d}} \leq \frac{f_{\mathrm{y}}}{\gamma_{\mathrm{M}}}$$

with the lower value of f_{y}. The partial safety factors for normal load case γ_{F}, γ_{M} see 4.2. This gives:

$$\sigma_{\mathrm{st,m,d}} = 0{,}45\ \mathrm{N/mm}^2 \quad \text{less than} \quad \frac{f_{\mathrm{y}}}{\gamma_{\mathrm{M}}} = \frac{120\ \mathrm{N/mm}^2}{1{,}1} = 109\ \mathrm{N/mm}^2$$

The forces on the supports are in the direction of the dead load:

– for the outer supports (A) with $\alpha_{\mathrm{A}} = 0{,}4$, see IEC 60865-1:2011, Table 3:

$$F_{\mathrm{st,r,dA}} = \alpha_{\mathrm{A}}\, F_{\mathrm{str,d}} = 0{,}4 \cdot 21{,}5\ \mathrm{N} = 8{,}6\ \mathrm{N}$$

– for the inner supports (B) with $\alpha_{\mathrm{B}} = 1{,}1$, see IEC 60865-1:2011, Table 3:

$$F_{\mathrm{st,r,dB}} = \alpha_{\mathrm{B}}\, F_{\mathrm{str,d}} = 1{,}1 \cdot 21{,}5\ \mathrm{N} = 23{,}7\ \mathrm{N}$$

NOTE In some standards the safety factors for the supports can include the partial safety factor γ_{F} for action.

4.4 Exceptional load case: Effects of short-circuit currents

4.4.1 Maximum force on the central main conductor

The maximum electromagnetic force on the central main conductor is:

$$F_{\mathrm{m3}} = \frac{\mu_0}{2\pi} \frac{\sqrt{3}}{2} i_{\mathrm{p}}^2 \frac{l}{a_{\mathrm{m}}} = \frac{4\pi \cdot 10^{-7}}{2\pi} \frac{\mathrm{Vs}}{\mathrm{Am}} \cdot \frac{\sqrt{3}}{2} \cdot \left(30{,}6 \cdot 10^3\ \mathrm{A}\right)^2 \cdot \frac{1{,}00\ \mathrm{m}}{0{,}202\ \mathrm{m}} = 803\ \mathrm{N} \qquad (2)$$

where

$$i_{\mathrm{p}} = \kappa \sqrt{2}\, I_{\mathrm{k}}'' = 1{,}35 \cdot \sqrt{2} \cdot 16\ \mathrm{kA} = 30{,}6\ \mathrm{kA} = 30{,}6 \cdot 10^3\ \mathrm{A}$$

and the effective distance between the main conductors

$$a_{\mathrm{m}} = \frac{a}{k_{12}} = \frac{0{,}20\ \mathrm{m}}{0{,}99} = 0{,}202\ \mathrm{m} \qquad (6)$$

with k_{12} according to IEC 60865-1:2011, Figure 1 with $a_{1\mathrm{s}} = a$, $b_{\mathrm{s}} = b_{\mathrm{m}}$, $c_{\mathrm{s}} = c_{\mathrm{m}}$, for $b_{\mathrm{m}}/c_{\mathrm{m}}$ = 60 mm/10 mm = 6, and a/c_{m} = 200 mm/10 mm = 20.

Documents
Document Sharing Hub
Full document details: PD IEC/TR 60865-2:2015

4.4.2 Conductor stress and forces on the supports

4.4.2.1 General

The calculations can be made according to the following 4.4.2.2 or 4.4.2.3.

4.4.2.2 Simplified method

4.4.2.2.1 Conductor bending stress

The maximum bending stress is:

$$\sigma_{\mathrm{m,d}} = V_{\sigma\mathrm{m}} V_{\mathrm{rm}} \beta \frac{F_{\mathrm{m3}}\, l}{8 W_{\mathrm{m}}} = 1{,}0 \cdot 0{,}73 \cdot \frac{803\ \mathrm{N} \cdot 1{,}00\ \mathrm{m}}{8 \cdot 1 \cdot 10^{-6}\ \mathrm{m}^3} = 73{,}3 \cdot 10^6\ \mathrm{N/m^2} = 73{,}3\ \mathrm{N/mm^2} \tag{9}$$

where

$V_{\sigma\mathrm{m}} V_{\mathrm{rm}}$ = 1,0 $(V_{\sigma\mathrm{m}} V_{\mathrm{rm}})_{\mathrm{max}}$ according to IEC 60865-1:2011, Table 2

β = 0,73 according to IEC 60865-1:2011, Table 3

$$W_{\mathrm{m}} = \frac{J_{\mathrm{m}}}{c_{\mathrm{m}}/2} = \frac{0{,}5 \cdot 10^{-8}\ \mathrm{m}^4}{0{,}005\ \mathrm{m}} = 1 \cdot 10^{-6}\mathrm{m}^3$$

The busbar is assumed to withstand the short-circuit force if

$$\sigma_{\mathrm{m,d}} + \sigma_{\mathrm{st,m,k}} \le q\, f_{\mathrm{y}} \tag{11}$$

with the lower value of f_{y}. $\sigma_{\mathrm{st,m,k}}$ see 4.3. For rectangular cross-section $q = 1{,}5$, see IEC 60865-1:2011, Table 4. This gives:

$$\sigma_{\mathrm{m,d}} + \sigma_{\mathrm{st,m,k}} = 73{,}3\ \mathrm{N/mm^2} + 0{,}33\ \mathrm{N/mm^2} = 73{,}6\ \mathrm{N/mm^2} \quad \text{less than} \quad q\, f_{\mathrm{y}} = 1{,}5 \cdot 120\ \mathrm{N/mm^2} = 180\ \mathrm{N/mm^2}$$

4.4.2.2.2 Forces on the supports

The equivalent static force on the supports is:

$$F_{\mathrm{r,d}} = V_{\mathrm{F}} V_{\mathrm{rm}} \alpha F_{\mathrm{m3}} \tag{15}$$

According to IEC 60865-1:2011, Table 2, with the upper value of f_{y} and $\sigma_{\mathrm{tot,d}} = \sigma_{\mathrm{m,d}} + \sigma_{\mathrm{st,m,k}}$ it is:

$$\frac{\sigma_{\mathrm{tot,d}}}{0{,}8\, f_{\mathrm{y}}} = \frac{73{,}6\ \mathrm{N/mm^2}}{0{,}8 \cdot 180\ \mathrm{N/mm^2}} = 0{,}511$$

Therefore, with a three-phase short-circuit we meet range 2 in IEC 60865-1:2011, Table 2,

$$0{,}370 < \frac{\sigma_{\mathrm{tot,d}}}{0{,}8\, f_{\mathrm{y}}} < 1$$

hence

Documents
Document Sharing Hub
Full document details: PD IEC/TR 60865-2:2015

$$V_F V_{rm} = \frac{0{,}8\, f_y}{\sigma_{tot,d}} = \frac{1}{0{,}511} = 1{,}96$$

For the outer supports (A) it is with $\alpha_A = 0{,}4$, see IEC 60865-1:2011, Table 3:

$$F_{r,dA} = V_F V_{rm} \alpha_A F_{m3} = 1{,}96 \cdot 0{,}4 \cdot 803\ \text{N} = 630\ \text{N}$$

For the inner supports (B) it is with $\alpha_B = 1{,}1$, see IEC 60865-1:2011, Table 3:

$$F_{r,dB} = V_F V_{rm} \alpha_B F_{m3} = 1{,}96 \cdot 1{,}1 \cdot 803\ \text{N} = 1731\ \text{N}$$

4.4.2.3 Detailed method

4.4.2.3.1 Relevant natural frequency f_{cm} and factors V_F, V_{rm} and $V_{\sigma m}$

The relevant natural frequency of the main conductor is:

$$f_{cm} = \frac{\gamma}{l^2}\sqrt{\frac{E\,J_m}{m'_m}} = \frac{3{,}56}{(1{,}00\ \text{m})^2} \cdot \sqrt{\frac{7 \cdot 10^{10}\ \text{N/m}^2 \cdot 0{,}5 \cdot 10^{-8}\ \text{m}^4}{1{,}62\ \text{kg/m}}} = 52{,}3\ \text{Hz} \qquad (16)$$

where

$\gamma = 3{,}56$ according to IEC 60865-1:2011, Table 3

$J_m = 0{,}5 \cdot 10^{-8}\text{m}^4$ see 4.4.2.2.1

The frequency ratio is:

$$\frac{f_{cm}}{f} = \frac{52{,}3\ \text{Hz}}{50\ \text{Hz}} = 1{,}05$$

From Figure 4 and 5.7.3 of IEC 60865-1:2011, the following values for the factors V_F, $V_{\sigma m}$ and V_{rm} are obtained:

$$V_F = 1{,}8$$
$$V_{\sigma m} = 1{,}0$$
$$V_{rm} = 1{,}0$$

4.4.2.3.2 Conductor bending stress

The maximum bending stress is:

$$\sigma_{m,d} = V_{\sigma m} V_{rm} \beta \frac{F_{m3}\, l}{8 W_m} = 1{,}0 \cdot 1{,}0 \cdot 0{,}73 \cdot \frac{803\ \text{N} \cdot 1{,}00\ \text{m}}{8 \cdot 1 \cdot 10^{-6}\ \text{m}^3} = 73{,}3 \cdot 10^6\ \text{N/m}^2 = 73{,}3\ \text{N/mm}^2 \qquad (9)$$

where

$V_{\sigma m} V_{rm} = 1{,}0 \cdot 1{,}0$ according to 4.4.2.3.1

$\beta = 0{,}73$ according to IEC 60865-1:2011, Table 3

$W_m = 1 \cdot 10^{-6}\text{m}^3$ see 4.4.2.2.1

The busbar is assumed to withstand the short-circuit force if

Documents
Document Sharing Hub
Full document details: PD IEC/TR 60865-2:2015

$$\sigma_{m,d} + \sigma_{st,m,k} \leq q\, f_y \tag{11}$$

with the lower value of f_y. $\sigma_{st,m,k}$ see 4.3. For rectangular cross-section $q = 1{,}5$, see IEC 60865-1:2011, Table 4. This gives:

$$\sigma_{m,d} + \sigma_{st,m,k} = 73{,}3\ \text{N/mm}^2 + 0{,}33\ \text{N/mm}^2 = 73{,}6\ \text{N/mm}^2 \quad \text{less than} \quad q\, f_y = 1{,}5 \cdot 120\ \text{N/mm}^2 = 180\ \text{N/mm}^2$$

4.4.2.3.3 Forces on the supports

The equivalent static force on supports becomes:

$$F_{r,d} = V_F\, V_{rm}\, \alpha\, F_{m3} \tag{15}$$

According to IEC 60865-1:2011, Table 2, with the upper value of f_y and $\sigma_{tot,d} = \sigma_{m,d} + \sigma_{st,m,k}$ it is:

$$\frac{\sigma_{tot,d}}{0{,}8\, f_y} = \frac{73{,}6\ \text{N/mm}^2}{0{,}8 \cdot 180\ \text{N/mm}^2} = 0{,}511$$

Therefore, with a three-phase short-circuit we meet range 2 in IEC 60865-1:2011, Table 2,

$$0{,}370 < \frac{\sigma_{tot,d}}{0{,}8\, f_y} < 1$$

hence

$$V_F\, V_{rm} = \frac{0{,}8\, f_y}{\sigma_{tot,d}} = \frac{1}{0{,}511} = 1{,}96$$

According to 4.4.2.3.1 above, $V_F\, V_{rm} = 1{,}8 \cdot 1{,}0 = 1{,}8$ which is less than the value 1,96 according to IEC 60865-1:2011, Table 2.

For the outer supports (A) it is with $\alpha_A = 0{,}4$, see IEC 60865-1:2011, Table 3:

$$F_{r,dA} = V_F\, V_{rm}\, \alpha_A\, F_{m3} = 1{,}8 \cdot 1{,}0 \cdot 0{,}4 \cdot 803\ \text{N} = 578\ \text{N}$$

For the inner supports (B) it is with $\alpha_B = 1{,}1$, see IEC 60865-1:2011, Table 3:

$$F_{r,dB} = V_F\, V_{rm}\, \alpha_B\, F_{m3} = 1{,}8 \cdot 1{,}0 \cdot 1{,}1 \cdot 803\ \text{N} = 1590\ \text{N}$$

4.5 Conclusions

The busbar will withstand the dead load

The calculated bending stress is	$\sigma_{st,m,d}$	1 N/mm^2
The outer supports have to withstand a vertical force of	$F_{st,r,dA}$	9 N
The inner supports have to withstand a vertical force of	$F_{st,r,dB}$	24 N

Documents
Document Sharing Hub
Full document details: PD IEC/TR 60865-2:2015

		Simplified method	Detailed method
The busbar will withstand the short-circuit load			
The calculated bending stress is	$\sigma_{tot,d}$	74 N/mm^2	74 N/mm^2
The outer supports have to withstand an equivalent static force of	$F_{r,dA}$	630 N	580 N
The inner supports have to withstand an equivalent static force of	$F_{r,dB}$	1 740 N	1 590 N

The stresses and forces are rounded.

The forces calculated with the detailed method are less than calculated with the simplified method.

5 Example 2 – Mechanical effects on a 10 kV arrangement with multiple rigid conductors

5.1 General

The basis for the calculation in this example is the same three-phase 10 kV busbar as in Example 1, but now with three sub-conductors per main conductor as shown in Figure 2. The cross-sections of the sub-conductors are 60 mm × 10 mm as the conductors of Example 1. The connecting pieces are spacers. According to IEC 61936-1 [1], the calculation is done for the normal load case considering the dead load of the busbar and the exceptional load case considering the combination of effects of short-circuit currents and dead load.

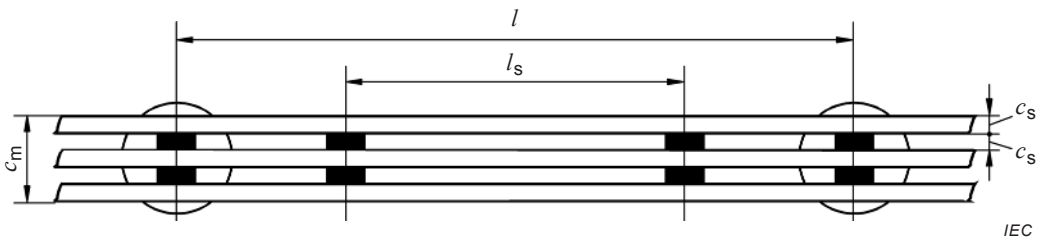

Figure 2 – Position of the sub-conductors and connecting pieces

5.2 Data (additional to the data of Example 1)

Number of sub-conductors	n =	3
Dimension of sub-conductor in the direction of the force	c_s =	10 mm
Number of sets of spacers	k =	2
Centre-line distance between connecting pieces	l_s =	0,5 m
Dimension of spacers of EN AW-6101B T7		60 mm × 60 mm × 10 mm

Documents
Document Sharing Hub
Full document details: PD IEC/TR 60865-2:2015

5.3 Normal load case: Conductor stress and forces on the supports caused by dead load

In 4.3 (Example 1), the following values are calculated for one conductor

Dead load of the conductor	$F_{\text{str,k}}$	=	15,9 N
	$F_{\text{str,d}}$	=	21,5 N
Conductor bending stress	$\sigma_{\text{st,m,k}}$	=	0,33 N/mm^2
	$\sigma_{\text{st,m,d}}$	=	0,45 N/mm^2

In this Example 2, the conductor bending stress is the same as in Example 1, 4.3. According to the number of sub-conductors, the vertical forces on the supports are n times higher

– for the outer supports (A) with $\alpha_{\text{A}} = 0{,}4$, see IEC 60865-1:2011, Table 3:

$$F_{\text{st,r,dA}} = n\,\alpha_{\text{A}}\,F_{\text{str,d}} = 3 \cdot 0{,}4 \cdot 21{,}5\ \text{N} = 25{,}8\ \text{N}$$

– for the inner supports (B) with $\alpha_{\text{B}} = 1{,}1$, see IEC 60865-1:2011, Table 3:

$$F_{\text{st,r,dB}} = n\,\alpha_{\text{B}}\,F_{\text{str,d}} = 3 \cdot 1{,}1 \cdot 21{,}5\ \text{N} = 71{,}0\ \text{N}$$

5.4 Exceptional load case: Effects of short-circuit currents

5.4.1 Maximum forces on the conductors

5.4.1.1 Maximum force on the central main conductor

The maximum electromagnetic force on the central main conductor is:

$$F_{\text{m3}} = \frac{\mu_0}{2\pi}\,\frac{\sqrt{3}}{2}\,i_{\text{p}}^2\,\frac{l}{a_{\text{m}}} = \frac{4\pi \cdot 10^{-7}}{2\pi}\,\frac{\text{Vs}}{\text{Am}} \cdot \frac{\sqrt{3}}{2} \cdot \left(30{,}6 \cdot 10^3\ \text{A}\right)^2 \cdot \frac{1{,}00\ \text{m}}{0{,}20\ \text{m}} = 811\,\text{N} \qquad (2)$$

where

$$i_{\text{p}} = \kappa\sqrt{2}\,I''_{\text{k}} = 1{,}35 \cdot \sqrt{2} \cdot 16\ \text{kA} = 30{,}6\ \text{kA} = 30{,}6 \cdot 10^3\ \text{A}$$

and the effective distance between the main conductors

$$a_{\text{m}} = \frac{a}{k_{12}} = \frac{0{,}2\ \text{m}}{1{,}00} = 0{,}20\ \text{m} \qquad (6)$$

with k_{12} according to IEC 60865-1:2011, Figure 1 with $a_{1\text{s}} = a$, $b_{\text{s}} = b_{\text{m}}$, $c_{\text{s}} = c_{\text{m}}$, for $b_{\text{m}}/c_{\text{m}} = 60$ mm/50 mm = 1,2 and $a/c_{\text{m}} = 200$ mm/50 mm = 4. The dimensions b_{m} and c_{m} are shown in IEC 60865-1:2011, Figure 2 b).

5.4.1.2 Maximum force on the sub-conductor

The maximum electromagnetic force on the outer sub-conductor between two adjacent connecting pieces is:

$$F_{\text{s}} = \frac{\mu_0}{2\pi}\left(\frac{i_{\text{p}}}{n}\right)^2 \frac{l_{\text{s}}}{a_{\text{s}}} = \frac{4\pi \cdot 10^{-7}}{2\pi}\,\frac{\text{Vs}}{\text{Am}} \cdot \left(\frac{30{,}6 \cdot 10^3\ \text{A}}{3}\right)^2 \cdot \frac{0{,}5\ \text{m}}{20{,}2 \cdot 10^{-3}\ \text{m}} = 515\,\text{N} \qquad (4)$$

where

Documents
Document Sharing Hub

$$\frac{1}{a_s} = \frac{k_{12}}{a_{12}} + \frac{k_{13}}{a_{13}} = \frac{0,60}{20\ \text{mm}} + \frac{0,78}{40\ \text{mm}} = \frac{1}{20,2\ \text{mm}} \tag{8}$$

with k_{12} and k_{13} from IEC 60865-1:2011, Figure 1:

– k_{12} = 0,60 for a_{12}/c_s = 20 mm/10 mm = 2 and $b_s/c_s = b_m/c_s$ = 60 mm/10 mm = 6
– k_{13} = 0,78 for a_{13}/c_s = 40 mm/10 mm = 4 and $b_s/c_s = b_m/c_s$ = 60 mm/10 mm = 6

or a_s from IEC 60865-1:2011, Table 1.

5.4.2 Conductor stress and forces on the supports

5.4.2.1 General

The calculations can be made according to 5.4.2.2 or 5.4.2.3.

5.4.2.2 Simplified method

5.4.2.2.1 Bending stress caused by the forces between the main conductors

The maximum bending stress caused by the forces between the main conductors is:

$$\sigma_{m,d} = V_{\sigma m} V_{rm} \beta \frac{F_{m3}\, l}{8 W_m} = 1,0 \cdot 0,73 \cdot \frac{811\,\text{N} \cdot 1,00\ \text{m}}{8 \cdot 3 \cdot 10^{-6}\ \text{m}^3} = 24,7 \cdot 10^6\ \text{N/m}^2 = 24,7\ \text{N/mm}^2 \tag{9}$$

where

$V_{\sigma m} V_{rm} = 1,0 = (V_{\sigma m} V_{rm})_{max}$ according to IEC 60865-1, Table 2

$\beta = 0,73$ according to IEC 60865-1, Table 3

$$J_s = \frac{c_s^3 b_s}{12} = \frac{0,010^3 \cdot 0,060}{12}\ \text{m}^4 = 0,5 \cdot 10^{-8}\ \text{m}^4$$

$$W_s = \frac{J_s}{c_s/2} = \frac{0,5 \cdot 10^{-8}\ \text{m}^4}{0,005\ \text{m}} = 1 \cdot 10^{-6}\ \text{m}^3$$

$W_m = n\, W_s = 3 \cdot 1 \cdot 10^{-6}\ \text{m}^3 = 3 \cdot 10^{-6}\ \text{m}^3$ according to IEC 60865-1, 5.4.2

5.4.2.2.2 Bending stress caused by the forces between the sub-conductors

The maximum bending stress caused by the forces between the sub-conductors is:

$$\sigma_{s,d} = V_{\sigma s} V_{rs} \frac{F_s\, l_s}{16 W_s} = 1,0 \cdot \frac{515\ \text{N} \cdot 0,5\ \text{m}}{16 \cdot 1 \cdot 10^{-6}\ \text{m}^3} = 16,1 \cdot 10^6\ \text{N/m}^2 = 16,1\ \text{N/mm}^2 \tag{10}$$

where

$V_{\sigma s} V_{rs} = 1,0 = (V_{\sigma s} V_{rs})_{max}$ according to IEC 60865-1:2011, Table 2

$W_s = 1 \cdot 10^{-6}\text{m}^3$ see 5.4.2.2.1

5.4.2.2.3 Total conductor stress

The total conductor stress is with the stresses calculated in 5.4.2.2.1, 5.4.2.2.2 and 5.3:

$$\sigma_{tot,d} = \sigma_{m,d} + \sigma_{s,d} + \sigma_{st,m,k} = 24,7\ \text{N/mm}^2 + 16,1\ \text{N/mm}^2 + 0,33\ \text{N/mm}^2 = 41,1\ \text{N/mm}^2 \tag{12}$$

AVA Documents
Document Sharing Hub
Full document details: PD IEC/TR 60865-2:2015

The busbar is assumed to withstand the short-circuit force if

$$\sigma_{\text{tot,d}} \leq q\, f_{\text{y}} \tag{13}$$

with the lower value of f_{y}. For rectangular cross-sections q = 1,5, see IEC 60865-1:2011, Table 4 or 5.4.2. This gives:

$$\sigma_{\text{tot,d}} = 41{,}1\,\text{N/mm}^2 \quad \text{less than} \quad q\, f_{\text{y}} = 1{,}5 \cdot 120\,\text{N/mm}^2 = 180\,\text{N/mm}^2$$

It is recommended that the stress caused by the forces between sub-conductors holds

$$\sigma_{\text{s,d}} \leq f_{\text{y}} \tag{14}$$

with the lower value of f_{y}. This gives:

$$\sigma_{\text{s,d}} = 16{,}1\,\text{N/mm}^2 \quad \text{less than} \quad f_{\text{y}} = 120\,\text{N/mm}^2$$

5.4.2.2.4 Forces on the supports

The equivalent static force on supports is:

$$F_{\text{r,d}} = V_{\text{F}}\, V_{\text{rm}}\, \alpha\, F_{\text{m3}} \tag{15}$$

According to IEC 60865-1:2011, Table 2, with the upper value of f_{y} it is:

$$\frac{\sigma_{\text{tot,d}}}{0{,}8\, f_{\text{y}}} = \frac{41{,}1\,\text{N/mm}^2}{0{,}8 \cdot 180\,\text{N/mm}^2} = 0{,}285$$

therefore with a three-phase short-circuit we meet range 1 in IEC 60865-1:2011, Table 2,

$$\frac{\sigma_{\text{tot,d}}}{0{,}8\, f_{\text{y}}} < 0{,}370$$

hence

$$V_{\text{F}}\, V_{\text{rm}} = 2{,}7$$

For the outer supports (A) it is with α_{A} = 0,4, see IEC 60865-1:2011, Table 3:

$$F_{\text{r,dA}} = V_{\text{F}}\, V_{\text{rm}}\, \alpha_{\text{A}}\, F_{\text{m3}} = 2{,}7 \cdot 0{,}4 \cdot 811\,\text{N} = 876\,\text{N}$$

For the inner supports (B) it is with α_{B} = 1,1, see IEC 60865-1:2011, Table 3:

$$F_{\text{r,dB}} = V_{\text{F}}\, V_{\text{rm}}\, \alpha_{\text{B}}\, F_{\text{m3}} = 2{,}7 \cdot 1{,}1 \cdot 811\,\text{N} = 2409\,\text{N}$$

Documents
Document Sharing Hub
Full document details: PD IEC/TR 60865-2:2015

5.4.2.3 Detailed method

5.4.2.3.1 Relevant natural frequency f_{cm} of the main conductors, f_{cs} of the sub-conductors and factors V_F, $V_{\sigma m}$, $V_{\sigma s}$, V_{rm} and V_{rs}

The relevant natural frequency of the main conductors is:

$$f_{cm} = e\frac{\gamma}{l^2}\sqrt{\frac{E\,J_s}{m'_s}} = 0{,}97\cdot\frac{3{,}56}{(1{,}00\ \text{m})^2}\cdot\sqrt{\frac{7\cdot 10^{10}\ \text{N/m}^2\cdot 0{,}5\cdot 10^{-8}\ \text{m}^4}{1{,}62\ \text{kg/m}}} = 50{,}8\ \text{Hz} \qquad (17)$$

where

e = 0,97 according to IEC 60865-1:2011, Figure 3c), for $k = 2\left(\frac{l_s}{l} = 0{,}5\right)$ and the radio

$$\frac{m_z}{n m'_s l} = \frac{1{,}62\ \text{kg/m}\cdot 0{,}06\ \text{m}\cdot 2}{3\cdot 1{,}62\ \text{kg/m}\cdot 1{,}00\ \text{m}} = 0{,}04$$

γ = 3,56 according to IEC 60865-1:2011, Table 3

J_s = 0,5·10^{-8}m^4 see 5.4.2.2.1

The relevant natural frequency of the sub-conductors is:

$$f_{cs} = \frac{3{,}56}{l_s^2}\sqrt{\frac{E\,J_s}{m'_s}} = \frac{3{,}56}{(0{,}5\ \text{m})^2}\cdot\sqrt{\frac{7\cdot 10^{10}\ \text{N/m}^2\cdot 0{,}5\cdot 10^{-8}\text{m}^4}{1{,}62\ \text{kg/m}}} = 209\ \text{Hz} \qquad (18)$$

The frequency ratios are:

$$\frac{f_{cm}}{f} = \frac{50{,}8\ \text{Hz}}{50\ \text{Hz}} = 1{,}02$$

$$\frac{f_{cs}}{f} = \frac{209\ \text{Hz}}{50\ \text{Hz}} = 4{,}18$$

This gives from IEC 60865-1:2011, Figure 4 and 5.7.3, the following values for the factors V_F, $V_{\sigma m}$, $V_{\sigma s}$, V_{rm} and V_{rs}:

$$V_F = 1{,}8$$

$$V_{\sigma m} = 1{,}0 \qquad V_{\sigma s} = 1{,}0$$

$$V_{rm} = 1{,}0 \qquad V_{rs} = 1{,}0$$

5.4.2.3.2 Bending stress caused by the forces between the main conductors

The maximum bending stress caused by the forces between the main conductors is:

$$\sigma_{m,d} = V_{\sigma m} V_{rm}\,\beta\,\frac{F_{m3}\,l}{8\,W_m} = 1{,}0\cdot 1{,}0\cdot 0{,}73\cdot\frac{811\,\text{N}\cdot 1{,}00\ \text{m}}{8\cdot 3\cdot 10^{-6}\ \text{m}^3} = 24{,}7\cdot 10^6\ \text{N/m}^2 = 24{,}7\ \text{N/mm}^2 \qquad (9)$$

where

$V_{\sigma m}V_{rm}$ = 1,0·1,0 according to 5.4.2.3.1

β = 0,73 according to IEC 60865-1:2011, Table 3

Documents
Document Sharing Hub
Full document details: PD IEC/TR 60865-2:2015

$W_m = 3 \cdot 10^{-6} m^3$ see 5.4.2.2.1

5.4.2.3.3 Bending stress caused by the forces between the sub-conductors

The maximum bending stress caused by the forces between the sub-conductors is:

$$\sigma_{s,d} = V_{\sigma s} V_{rs} \frac{F_s l_s}{16 W_s} = 1{,}0 \cdot 1{,}0 \cdot \frac{515\,\text{N} \cdot 0{,}5\,\text{m}}{16 \cdot 1 \cdot 10^{-6}\,\text{m}^3} = 16{,}1 \cdot 10^6\,\text{N/m}^2 = 16{,}1\,\text{N/mm}^2 \quad (10)$$

where

$V_{\sigma s} V_{rs} = 1{,}0 \cdot 1{,}0$ according to 5.4.2.3.1

$W_s = 1 \cdot 10^{-6} m^3$ see 5.4.2.2.1

5.4.2.3.4 Total bending stress in the busbar

The total conductor stress is with the stresses calculated in 5.4.2.3.2 and 5.4.2.3.3 and 5.3:

$$\sigma_{tot,d} = \sigma_{m,d} + \sigma_{s,d} + \sigma_{st,m,k} = 24{,}7\,\text{N/mm}^2 + 16{,}1\,\text{N/mm}^2 + 0{,}33\,\text{N/mm}^2 = 41{,}1\,\text{N/mm}^2 \quad (12)$$

The busbar is assumed to withstand the short-circuit force if

$$\sigma_{tot,d} \le q\, f_y \quad (13)$$

with the lower value of f_y. For rectangular cross-sections $q = 1{,}5$, see IEC 60865-1:2011, Table 4. This gives:

$$\sigma_{tot,d} = 41{,}1\,\text{N/mm}^2 \quad \text{less than} \quad q\, f_y = 1{,}5 \cdot 120\,\text{N/mm}^2 = 180\,\text{N/mm}^2$$

It is recommended a value

$$\sigma_{s,d} \le f_y \quad (14)$$

with the lower value of f_y. This gives:

$$\sigma_{s,d} = 16{,}1\,\text{N/mm}^2 \quad \text{less than} \quad f_y = 120\,\text{N/mm}^2$$

5.4.2.3.5 Forces on the supports

The equivalent static force on supports is:

$$F_{r,d} = V_F V_{rm}\, \alpha\, F_{m3} \quad (15)$$

According to IEC 60865-1:2011, Table 2, with the upper value of f_y it is:

$$\frac{\sigma_{tot,d}}{0{,}8\, f_y} = \frac{41{,}1\,\text{N/mm}^2}{0{,}8 \cdot 180\,\text{N/mm}^2} = 0{,}285$$

Therefore with a three-phase short-circuit we meet range 1 in IEC 60865-1:2011, Table 2,

AVA Documents
Document Sharing Hub
Full document details: PD IEC/TR 60865-2:2015

$$\frac{\sigma_{\text{tot,d}}}{0{,}8\, f_{\text{y}}} < 0{,}370$$

hence

$$V_{\text{F}}\, V_{\text{rm}} = 2{,}7$$

According to 5.4.2.3.1 above, $V_{\text{F}}\, V_{\text{rm}}$ = 1,8 · 1,0 = 1,8, which is less than the value 2,7 obtained from IEC 60865-1:2011, Table 2.

For the outer supports (A) it is with α_{A} = 0,4, see IEC 60865-1:2011, Table 3:

$$F_{\text{r,dA}} = V_{\text{F}}\, V_{\text{rm}}\, \alpha_{\text{A}}\, F_{\text{m3}} = 1{,}8 \cdot 1{,}0 \cdot 0{,}4 \cdot 811\,\text{N} = 584\ \text{N}$$

For the inner supports (B) it is with α_{B} = 1,1; see IEC 60865-1:2011, Table 3:

$$F_{\text{r,dB}} = V_{\text{F}}\, V_{\text{rm}}\, \alpha_{\text{B}}\, F_{\text{m3}} = 1{,}8 \cdot 1{,}0 \cdot 1{,}1 \cdot 811\,\text{N} = 1606\ \text{N}$$

5.5 Conclusions

The busbar will withstand the dead load		
The calculated bending stress is	$\sigma_{\text{st,m,d}}$	1 N/mm^2
The outer supports have to withstand a vertical force of	$F_{\text{st,r,dA}}$	26 N
The inner supports have to withstand a vertical force of	$F_{\text{st,r,dB}}$	71 N

		Simplified method	Detailed method
The busbar will withstand the short-circuit force			
The calculated bending stresses are	$\sigma_{\text{tot,d}}$	42 N/mm^2	42 N/mm^2
	$\sigma_{\text{s,d}}$	17 N/mm^2	17 N/mm^2
The outer supports have to withstand an equivalent static force of	$F_{\text{r,dA}}$	880 N	590 N
The inner supports have to withstand an equivalent static force of	$F_{\text{r,dB}}$	2 410 N	1 610 N

The forces calculated with the detailed method are less than calculated with the simplified method.

6 Example 3. – Mechanical effects on a high-voltage arrangement with rigid conductors

6.1 General

The basis for the calculation in this example is a three-phase 380 kV busbar, with one tubular conductor per phase. The conductor arrangement is shown in Figure 3. This example includes calculations without and with automatic reclosing. Without automatic reclosing only one short-circuit current duration exists, with automatic reclosing two short-circuit current durations exist with an interval without current flow.

Documents
Document Sharing Hub
Full document details: PD IEC/TR 60865-2:2015

According to IEC 61936-1 [1], the calculation is done for the normal load case considering the dead load of the busbar and the exceptional load case considering the combination of effects of short-circuit currents and dead load.

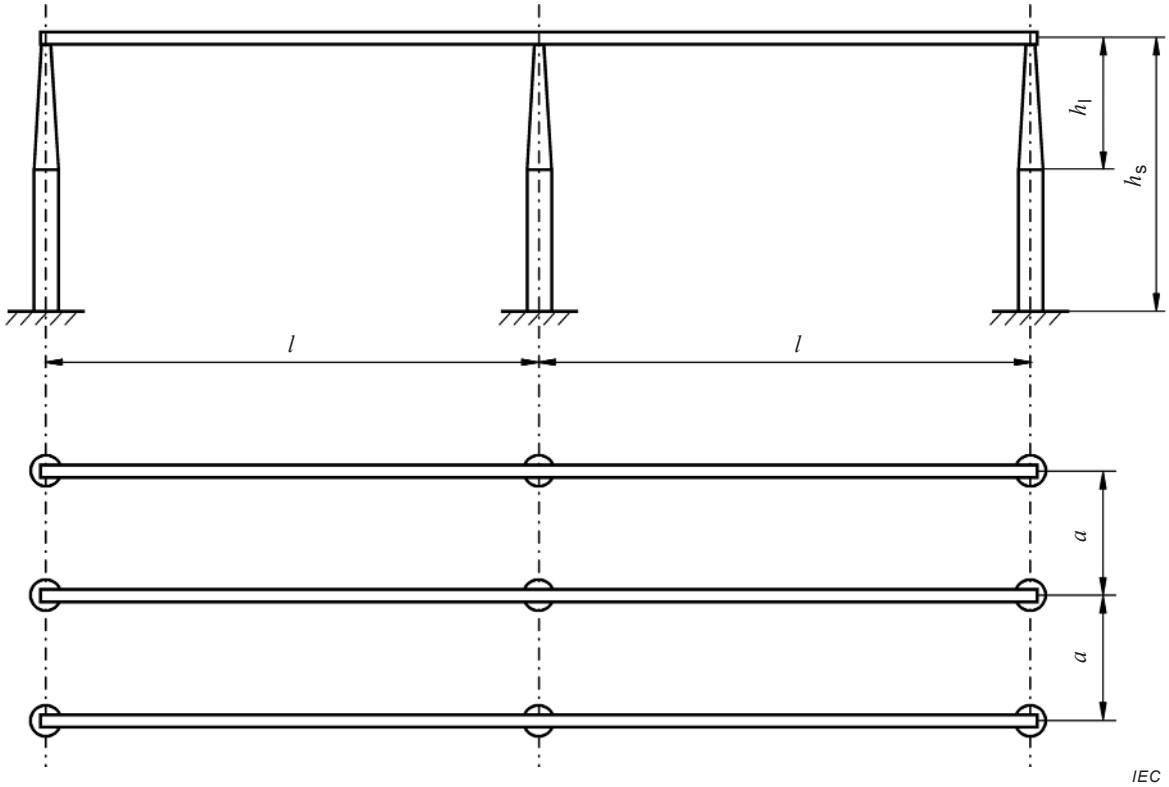

Figure 3 – Two-span arrangement with tubular conductors

6.2 Data

Initial symmetrical three-phase short-circuit current (r.m.s.)	I''_k	=	50 kA
Factor for the calculation of the peak short-circuit current	κ	=	1,81
System frequency	f	=	50 Hz
Number of spans			2
Centre-line distance between supports	l	=	18 m
Centre-line distance between conductors	a	=	5 m
Height of the insulator with clamp	h_l	=	3,7 m
Height of the support	h_S	=	7,0 m
Tubular conductor 160 mm × 6 mm EN AW-6101B T6			
– Mass per unit length	m'_m	=	7,84 kg/m
– Outer diameter	d	=	160 mm
– Wall thickness	t	=	6 mm
– Young's modulus	E	=	70 000 N/mm^2

AVA Documents
Document Sharing Hub

– Stress corresponding to the yield point f_y = 160 N/mm^2 to 240 N/mm^2

Conventional value of acceleration of gravity g = 9,81 m/s^2

Partial safety factors; for example according to EN 1990 [2]

– Normal load case γ_F = 1,35

γ_M = 1,1

– Exceptional load case $\gamma_F\ \gamma_M$ = 1,0

NOTE Safety factors differ in national standards.

6.3 Normal load case: Conductor stress and forces on the supports caused by dead load

The dead load on the conductor is

$$F_{\text{str.k}} = m'_{\text{m}}\, l\, g = 7{,}84\,\frac{\text{kg}}{\text{m}} \cdot 18\ \text{m} \cdot 9{,}81\,\frac{\text{m}}{\text{s}^2} = 1384\ \text{N}$$

$$F_{\text{str,d}} = \gamma_{\text{F}}\, F_{\text{str,k}} = 1{,}35 \cdot 1384\ \text{N} = 1868\ \text{N}$$

The conductor bending stress is

$$\sigma_{\text{st,m,k}} = \frac{F_{\text{str}}\, l}{8 W_{\text{m}}} = \frac{1384\ \text{N} \cdot 18\ \text{m}}{8 \cdot 108 \cdot 10^{-6}\ \text{m}^3} = 28{,}8 \cdot 10^6\ \text{N/m}^2 = 28{,}8\ \text{N/mm}^2$$

$$\sigma_{\text{st,m,d}} = \gamma_{\text{F}}\, \sigma_{\text{st,m,k}} = 1{,}35 \cdot 28{,}8\ \text{N/mm}^2 = 38{,}9\ \text{N/mm}^2$$

with

$$J_{\text{m}} = \frac{\pi}{64}\left(d^4 - (d - 2t)^4\right) = \frac{\pi}{64} \cdot \left(0{,}16^4 - (0{,}16 - 2 \cdot 0{,}006)^4\right)\text{m}^4 = 8{,}62 \cdot 10^{-6}\ \text{m}^4$$

$$W_{\text{m}} = \frac{J_{\text{m}}}{d/2} = \frac{8{,}62 \cdot 10^{-6}\ \text{m}^4}{0{,}16/2\ \text{m}} = 108 \cdot 10^{-6}\ \text{m}^3$$

The conductors have sufficient strength if

$$\sigma_{\text{st,m,d}} \le \frac{f_{\text{y}}}{\gamma_{\text{M}}}$$

with the lower value of f_y. The partial safety factors for normal load case γ_F, γ_M see 6.2. This gives:

$$\sigma_{\text{st,m,d}} = 38{,}9\ \text{N/mm}^2 \quad \text{less than} \quad \frac{f_{\text{y}}}{\gamma_{\text{M}}} = \frac{160\ \text{N/mm}^2}{1{,}1} = 145\ \text{N/mm}^2$$

The force on the supports are in the direction of the dead load:

– for the outer supports (A) with α_A = 0,375, see IEC 60865-1:2011, Table 3:

$$F_{\text{st,r,dA}} = \alpha_{\text{A}}\, F_{\text{str,d}} = 0{,}375 \cdot 1868\ \text{N} = 701\ \text{N} = 0{,}701\ \text{kN}$$

– for the inner supports (B) with α_B = 1,25, see IEC 60865-1:2011, Table 3:

Documents
Document Sharing Hub
Full document details: PD IEC/TR 60865-2:2015

$$F_{\mathrm{st,r,dB}} = \alpha_{\mathrm{B}}\, F_{\mathrm{str,d}} = 1{,}25 \cdot 1868\ \mathrm{N} = 2335\ \mathrm{N} = 2{,}335\ \mathrm{kN}$$

6.4 Exceptional load case: Effects of short-circuit currents

6.4.1 Maximum force on the central main conductor

The maximum electromagnetic force on the central main conductor becomes:

$$F_{\mathrm{m3}} = \frac{\mu_0}{2\pi}\,\frac{\sqrt{3}}{2}\,i_{\mathrm{p}}^2\,\frac{l}{a_{\mathrm{m}}} = \frac{4\pi \cdot 10^{-7}}{2\pi}\,\frac{\mathrm{Vs}}{\mathrm{Am}} \cdot \frac{\sqrt{3}}{2} \cdot \left(128 \cdot 10^3\ \mathrm{A}\right)^2 \cdot \frac{18\ \mathrm{m}}{5\ \mathrm{m}} = 10200\ \mathrm{N} = 10{,}2\ \mathrm{kN} \qquad (2)$$

where

$$i_{\mathrm{p}} = \kappa\sqrt{2}\,I_{\mathrm{k}}'' = 1{,}81 \cdot \sqrt{2} \cdot 50\ \mathrm{kA} = 128\ \mathrm{kA} = 128 \cdot 10^3\ \mathrm{A}$$

and $a_{\mathrm{m}} = a = 5$ m according to IEC 60865-1:2011, 5.3.

6.4.2 Conductor stress and forces on the supports

6.4.2.1 General

The calculations can be made according to the following 6.4.2.2 or 6.4.2.3.

6.4.2.2 Simplified method

6.4.2.2.1 Calculation without three-phase automatic reclosing

6.4.2.2.1.1 Conductor bending stress

The maximum bending stress is:

$$\sigma_{\mathrm{m,d}} = V_{\sigma\mathrm{m}}\,V_{\mathrm{rm}}\,\beta\,\frac{F_{\mathrm{m3}}\,l}{8\,W_{\mathrm{m}}} = 1{,}0 \cdot 0{,}73 \cdot \frac{10{,}2 \cdot 10^3\ \mathrm{N} \cdot 18\ \mathrm{m}}{8 \cdot 108 \cdot 10^{-6}\ \mathrm{m}^3} = 155 \cdot 10^6\ \mathrm{N/m^2} = 155\ \mathrm{N/mm^2} \qquad (9)$$

where

$V_{\sigma\mathrm{m}}V_{\mathrm{rm}} = 1{,}0 = \left(V_{\sigma\mathrm{m}}V_{\mathrm{rm}}\right)_{\mathrm{max}}$	according to IEC 60865-1:2011, Table 2
$\beta = 0{,}73$	according to IEC 60865-1:2011, Table 3
$W_{\mathrm{m}} = 108 \cdot 10^{-6}\mathrm{m}^3$	see 6.3

For tubular cross-section, the total bending stress becomes:

$$\sigma_{\mathrm{tot,d}} = \sqrt{\sigma_{\mathrm{m,d}}^2 + \sigma_{\mathrm{st,m,k}}^2} = \sqrt{155^2 + 28{,}8^2}\ \mathrm{N/mm^2} = 158\ \mathrm{N/mm^2}$$

The busbar is assumed to withstand the short-circuit force if

$$\sigma_{\mathrm{tot,d}} \le q\,f_{\mathrm{y}} \qquad (11)$$

with the lower value of f_{y}. For tubular cross-section in accordance with IEC 60865-1:2011, Table 4:

Documents
Document Sharing Hub
Full document details: PD IEC/TR 60865-2:2015

$$q = 1{,}7\,\frac{1-(1-2\,t/d)^3}{1-(1-2\,t/d)^4} = 1{,}7\cdot\frac{1-(1-2\cdot 0{,}006\ \mathrm{m}/(0{,}160\ \mathrm{m}))^3}{1-(1-2\cdot 0{,}006\ \mathrm{m}/(0{,}160\ \mathrm{m}))^4} = 1{,}32$$

This gives:

$$\sigma_{\mathrm{tot,d}} = 158\ \mathrm{N/mm^2} \quad \text{less than} \quad q\,f_{\mathrm{y}} = 1{,}32\cdot 160\ \mathrm{N/mm^2} = 211\ \mathrm{N/mm^2}$$

6.4.2.2.1.2 Forces on the supports and moments on the substructures

The equivalent static force on supports is:

$$F_{\mathrm{r,d}} = V_{\mathrm{F}}\,V_{\mathrm{rm}}\,\alpha\,F_{\mathrm{m3}} \tag{15}$$

According to IEC 60865-1:2011, Table 2, with the upper value of f_{y} it is:

$$\frac{\sigma_{\mathrm{tot,d}}}{0{,}8\,f_{\mathrm{y}}} = \frac{158\ \mathrm{N/mm^2}}{0{,}8\cdot 240\ \mathrm{N/mm^2}} = 0{,}823$$

Therefore we meet range 2 in IEC 60865-1:2011, Table 2,

$$0{,}370 < \frac{\sigma_{\mathrm{tot,d}}}{0{,}8\,f_{\mathrm{y}}} < 1$$

hence

$$V_{\mathrm{F}}\,V_{\mathrm{rm}} = \frac{0{,}8\,f_{\mathrm{y}}}{\sigma_{\mathrm{tot,d}}} = \frac{1}{0{,}823} = 1{,}22$$

For the outer supports (A) it is with $\alpha_{\mathrm{A}} = 0{,}375$, see IEC 60865-1:2011, Table 3:

$$F_{\mathrm{r,dA}} = V_{\mathrm{F}}\,V_{\mathrm{rm}}\,\alpha_{\mathrm{A}}\,F_{\mathrm{m3}} = 1{,}22\cdot 0{,}375\cdot 10{,}2\ \mathrm{kN} = 4{,}67\ \mathrm{kN}$$

For the inner supports (B) it is with $\alpha_{\mathrm{B}} = 1{,}25$, see IEC 60865-1:2011, Table 3:

$$F_{\mathrm{r,dB}} = V_{\mathrm{F}}\,V_{\mathrm{rm}}\,\alpha_{\mathrm{B}}\,F_{\mathrm{m3}} = 1{,}22\cdot 1{,}25\cdot 10{,}2\ \mathrm{kN} = 15{,}6\ \mathrm{kN}$$

The bending moments on the substructures are:

– on the bottom of the outer insulators

$$M_{\mathrm{IA,d}} = F_{\mathrm{r,dA}}\,h_{\mathrm{I}} = 4{,}67\ \mathrm{kN}\cdot 3{,}7\ \mathrm{m} = 17{,}3\ \mathrm{kNm}$$

– on the bottom of the outer supports

$$M_{\mathrm{SA,d}} = F_{\mathrm{r,dA}}\,h_{\mathrm{S}} = 4{,}67\ \mathrm{kN}\cdot 7{,}0\ \mathrm{m} = 32{,}7\ \mathrm{kNm}$$

– on the bottom of the inner insulators

$$M_{\mathrm{IB,d}} = F_{\mathrm{r,dB}}\,h_{\mathrm{I}} = 15{,}6\ \mathrm{kN}\cdot 3{,}7\ \mathrm{m} = 57{,}7\ \mathrm{kNm}$$

– on the bottom of the inner supports

$$M_{\mathrm{SB,d}} = F_{\mathrm{r,dB}}\,h_{\mathrm{S}} = 15{,}6\ \mathrm{kN}\cdot 7{,}0\ \mathrm{m} = 109\ \mathrm{kNm}$$

Documents
Document Sharing Hub
Full document details: PD IEC/TR 60865-2:2015

6.4.2.2.2 Calculation with three-phase automatic reclosing

6.4.2.2.2.1 General

In networks with three-phase automatic reclosing different mechanical stresses can occur during the first and the second short-circuit current flow duration. In 6.4.2.2.1, the stresses and forces during the first short-circuit current flow duration are calculated.

6.4.2.2.2.2 Conductor bending stress

The maximum bending stress during the second short-circuit current flow duration is:

$$\sigma_{\mathrm{m,d}} = V_{\sigma\mathrm{m}} V_{\mathrm{rm}} \beta \frac{F_{\mathrm{m3}}\, l}{8 W_{\mathrm{m}}} = 1{,}8 \cdot 0{,}73 \cdot \frac{10{,}2 \cdot 10^{3}\ \mathrm{N} \cdot 18\ \mathrm{m}}{8 \cdot 108 \cdot 10^{-6}\ \mathrm{m}^{3}} = 279 \cdot 10^{6}\ \mathrm{N/m^2} = 279\ \mathrm{N/mm^2} \tag{9}$$

where

$V_{\sigma\mathrm{m}} V_{\mathrm{rm}} = 1{,}8 = (V_{\sigma\mathrm{m}} V_{\mathrm{rm}})_{\mathrm{max}}$	according to IEC 60865-1:2011, Table 2
β = 0,73	according to IEC 60865-1:2011, Table 3
W_{m} = 108·10^{-6}m^3	see 6.3

The bending stress during the second short-circuit current flow duration is greater than during the first short-circuit current flow duration calculated in 6.4.2.2.1.1.

The total bending stress becomes:

$$\sigma_{\mathrm{tot,d}} = \sqrt{\sigma_{\mathrm{m,d}}^{2} + \sigma_{\mathrm{st,m,k}}^{2}} = \sqrt{279^{2} + 28{,}8^{2}}\ \mathrm{N/mm^2} = 281\,\mathrm{N/mm^2}$$

The busbar is assumed to withstand the short-circuit force if

$$\sigma_{\mathrm{tot,d}} \le q\, f_{\mathrm{y}} \tag{11}$$

with the lower value of f_{y} and where q = 1,32, see 6.4.2.2.1.1. This gives:

$$\sigma_{\mathrm{tot,d}} = 281\,\mathrm{N/mm^2} \quad \text{greater than} \quad q\, f_{\mathrm{y}} = 1{,}32 \cdot 160\ \mathrm{N/mm^2} = 211\,\mathrm{N/mm^2}$$

Considering only the result of the simplified method, the busbar is not assumed to withstand the short-circuit force. Therefore it is necessary to apply the detailed method to verify that the conductors are assumed to withstand the short-circuit force.

6.4.2.2.2.3 Forces on the supports

The following calculation is made only for information, as a result of the conductors not withstanding the short-circuit force according to the simplified method.

The equivalent static force on the supports is:

$$F_{\mathrm{r,d}} = V_{\mathrm{F}} V_{\mathrm{rm}}\, \alpha\, F_{\mathrm{m3}} \tag{15}$$

During the first short-circuit current flow it is, see 6.4.2.2.1.2:

$$(V_{\mathrm{F}} V_{\mathrm{rm}})_{1} = 1{,}22$$

Documents
Document Sharing Hub
Full document details: PD IEC/TR 60865-2:2015