PD IEC/TR 61340-5-2:2018

BSI Standards Publication

Electrostatics

Part 5-2: Protection of electronic devices from electrostatic phenomena - User guide

Documents
Document Sharing Hub

Full document details: PD IEC/TR 61340-5-2:2018

National foreword

This Published Document is the UK implementation of IEC TR 61340-5-2:2018. It supersedes PD CLC/TR 61340-5-2:2008, which is withdrawn.

The UK participation in its preparation was entrusted to Technical Committee GEL/101, Electrostatics.

A list of organizations represented on this committee can be obtained on request to its secretary.

This publication does not purport to include all the necessary provisions of a contract. Users are responsible for its correct application.

© The British Standards Institution 2018
Published by BSI Standards Limited 2018

ISBN 978 0 580 93967 9

ICS 31.020; 29.020; 17.220.99

Compliance with a British Standard cannot confer immunity from legal obligations.

This Published Document was published under the authority of the Standards Policy and Strategy Committee on 30 April 2018.

Amendments/corrigenda issued since publication

Date	Text affected

Documents
Document Sharing Hub

Full document details: PD IEC/TR 61340-5-2:2018

IEC TR 61340-5-2

Edition 2.0 2018-03

TECHNICAL REPORT

colour inside

Electrostatics –
Part 5-2: Protection of electronic devices from electrostatic phenomena – User guide

INTERNATIONAL
ELECTROTECHNICAL
COMMISSION

ICS 17.220.99; 29.020

ISBN 978-2-8322-5445-5

Warning! Make sure that you obtained this publication from an authorized distributor.

® Registered trademark of the International Electrotechnical Commission

Documents
Document Sharing Hub

Full document details: PD IEC/TR 61340-5-2:2018

CONTENTS

FOREWORD 5
INTRODUCTION 7
1 Scope 9
2 Normative references 9
3 Terms, definitions and abbreviated terms 9
3.1 Terms and definitions 9
3.2 Abbreviated terms 9
4 Personnel safety 10
5 ESD control program 10
5.1 General 10
5.1.1 ESD control program requirements 10
5.1.2 ESD coordinator 10
5.1.3 Tailoring 10
5.2 ESD control program administrative requirements 11
5.2.1 ESD control program plan 11
5.2.2 Training plan 13
5.2.3 Product qualification 15
5.2.4 Compliance verification plan 16
5.3 ESD control program technical requirements 20
5.3.1 Grounding/equipotential bonding systems 20
5.3.2 Personnel grounding 22
5.3.3 ESD protected areas (EPA) 26
5.3.4 Packaging electronic products for shipment and storage 61
5.3.5 Marking 65
6 Automated handling equipment (AHE) 68
7 ESD control gloves and finger cots 68
7.1 Introductory remarks 68
7.2 Types 69
7.3 Testing and qualification 70
7.3.1 Properties to test 70
7.3.2 Resistance measurements 70
7.3.3 Charge decay time measurements 72
7.3.4 Product charging test 73
8 Handtools 75
8.1 Introductory remarks 75
8.2 Testing and qualification 75
8.2.1 Qualification criteria 75
8.2.2 Resistance measurement 75
8.2.3 Charge decay 78
Annex A (informative) Example ESD control program plan based on IEC 61340-5-1 81
A.1 Introductory remarks (Not part of the example) 81
A.2 Purpose 81
A.3 Range 81
A.4 Responsibilities 81
A.5 References 81

AVA Documents
Document Sharing Hub

A.6 Definitions ... 81
A.7 ESD control program plan ... 81
A.8 Training plan ... 82
A.8.1 Initial training ... 82
A.8.2 Refresher training ... 82
A.9 Product qualification ... 83
A.10 Compliance verification plan ... 83
A.11 ESD protected area requirements ... 83
A.11.1 General requirements ... 83
A.11.2 Grounding plan ... 84
A.11.3 Personnel grounding plan ... 84
A.12 Tailoring statement ... 84
A.13 Work surfaces ... 85
A.14 Packaging ... 85
A.15 Marking ... 85
A.16 Compliance verification procedures ... 86
A.16.1 Testing of wrist strap connection point ... 86
A.16.2 Checking for static generators ... 86
A.16.3 Checking isolated conductors ... 86
Annex B (informative) ESD control element considerations ... 87
B.1 General remarks ... 87
B.2 ESD control footwear and flooring ... 87
B.2.1 General ... 87
B.2.2 Ionizers ... 90
B.2.3 Constant monitors ... 90
Bibliography ... 92

Figure 1 – Example assessment report showing trend report ... 19
Figure 2 – Example of individually grounded benches – Recommended ... 21
Figure 3 – Example of a series ground connection of benches – Not recommended ... 22
Figure 4 – Relationship between body voltage and resistance to ground ... 23
Figure 5 – Voltage reading on person walking across grounded conductive floor whilst wearing two heelstraps ... 25
Figure 6 – Ionization by alpha radiation ... 45
Figure 7 – Corona ionization – Positive ... 45
Figure 8 – Corona ionization – Negative ... 45
Figure 9 – ESD sensitive part or assembly ... 66
Figure 10 – Example of a warning label for ESDS ... 66
Figure 11 – Example of a packaging label ... 67
Figure 12 – ESD control material marking ... 67
Figure 13 – Glove or finger cot resistance testing (as worn) ... 71
Figure 14 – Testing glove or finger cot resistance via a wrist strap system ... 72
Figure 15 – Product charging tests ... 75
Figure 16 – Tool resistance test ... 76
Figure 17 – Tool resistance to ground system ... 77
Figure 18 – Charge decay test ... 79

AVA Documents
Document Sharing Hub

Full document details: PD IEC/TR 61340-5-2:2018

Figure 19 – Tool CPM waveforms 80
Figure A.1 – Sign indicating special handling conditions 85
Figure A.2 – Label indicating product is ESD sensitive 86
Figure B.1 – Voltage generated for three types of footwear all on the same flooring system 90

Table 1 – Types of bands 32
Table 2 – Ionizer selection checklist 49
Table A.1 – ESD control program compliance verification requirements 83

Documents
Document Sharing Hub

Full document details: PD IEC/TR 61340-5-2:2018

INTERNATIONAL ELECTROTECHNICAL COMMISSION

ELECTROSTATICS –

Part 5-2: Protection of electronic devices from electrostatic phenomena – User guide

FOREWORD

1) The International Electrotechnical Commission (IEC) is a worldwide organization for standardization comprising all national electrotechnical committees (IEC National Committees). The object of IEC is to promote international co-operation on all questions concerning standardization in the electrical and electronic fields. To this end and in addition to other activities, IEC publishes International Standards, Technical Specifications, Technical Reports, Publicly Available Specifications (PAS) and Guides (hereafter referred to as "IEC Publication(s)"). Their preparation is entrusted to technical committees; any IEC National Committee interested in the subject dealt with may participate in this preparatory work. International, governmental and non-governmental organizations liaising with the IEC also participate in this preparation. IEC collaborates closely with the International Organization for Standardization (ISO) in accordance with conditions determined by agreement between the two organizations.
2) The formal decisions or agreements of IEC on technical matters express, as nearly as possible, an international consensus of opinion on the relevant subjects since each technical committee has representation from all interested IEC National Committees.
3) IEC Publications have the form of recommendations for international use and are accepted by IEC National Committees in that sense. While all reasonable efforts are made to ensure that the technical content of IEC Publications is accurate, IEC cannot be held responsible for the way in which they are used or for any misinterpretation by any end user.
4) In order to promote international uniformity, IEC National Committees undertake to apply IEC Publications transparently to the maximum extent possible in their national and regional publications. Any divergence between any IEC Publication and the corresponding national or regional publication shall be clearly indicated in the latter.
5) IEC itself does not provide any attestation of conformity. Independent certification bodies provide conformity assessment services and, in some areas, access to IEC marks of conformity. IEC is not responsible for any services carried out by independent certification bodies.
6) All users should ensure that they have the latest edition of this publication.
7) No liability shall attach to IEC or its directors, employees, servants or agents including individual experts and members of its technical committees and IEC National Committees for any personal injury, property damage or other damage of any nature whatsoever, whether direct or indirect, or for costs (including legal fees) and expenses arising out of the publication, use of, or reliance upon, this IEC Publication or any other IEC Publications.
8) Attention is drawn to the Normative references cited in this publication. Use of the referenced publications is indispensable for the correct application of this publication.
9) Attention is drawn to the possibility that some of the elements of this IEC Publication may be the subject of patent rights. IEC shall not be held responsible for identifying any or all such patent rights.

The main task of IEC technical committees is to prepare International Standards. However, a technical committee may propose the publication of a technical report when it has collected data of a different kind from that which is normally published as an International Standard, for example "state of the art".

IEC TR 61340-5-2, which is a Technical Report, has been prepared by IEC technical committee 101: Electrostatics.

This second edition cancels and replaces the first edition published in 2007. This edition constitutes a technical revision.

This edition includes the following significant technical changes with respect to the previous edition:

This second edition of IEC TR 61340-5-2 has been modified to provide guidance for users of IEC 61340-5-1:2016. The text has been arranged to follow the requirements of

AVA Documents
Document Sharing Hub

IEC 61340-5-1:2016 as closely as possible as well as providing specific guidance on each of the requirements of IEC 61340-5-1:2016.

The text of this Technical Report is based on the following documents:

Enquiry draft	Report on voting
101/532/DTR	101/543/RVDTR

Full information on the voting for the approval of this technical report can be found in the report on voting indicated in the above table.

This document has been drafted in accordance with the ISO/IEC Directives, Part 2.

A list of all parts in the IEC 61340 series, published under the general title *Electrostatics,* can be found on the IEC website.

The committee has decided that the contents of this document will remain unchanged until the stability date indicated on the IEC website under "http://webstore.iec.ch" in the data related to the specific document. At this date, the document will be

- reconfirmed,
- withdrawn,
- replaced by a revised edition, or
- amended.

A bilingual version of this publication may be issued at a later date.

IMPORTANT – The 'colour inside' logo on the cover page of this publication indicates that it contains colours which are considered to be useful for the correct understanding of its contents. Users should therefore print this document using a colour printer.

Documents
Document Sharing Hub

Full document details: PD IEC/TR 61340-5-2:2018

INTRODUCTION

This user guide has been produced for individuals and organizations that are faced with controlling electrostatic discharge (ESD). It provides guidance that can be used for developing, implementing and monitoring an electrostatic discharge control program in accordance with IEC 61340-5-1.

This user guide applies to activities that manufacture, process, assemble, install, package, label, service, test, inspect or otherwise handle electrical or electronic parts, assemblies and equipment susceptible to damage by electrostatic discharges greater than or equal to 100 V using the human body model (HBM), 200 V charged device model (CDM) or 35 V on isolated conductors. Isolated conductors were historically represented by the machine model (MM). The MM test is no longer used for qualification of devices, only HBM and CDM. The MM is retained in this document for process control of isolated conductors. These three levels were selected for IEC 61340-5-1 as the baseline susceptibility threshold, since a large majority of the ESD products on the market have a sensitivity of greater than 100 V HBM, 200 V CDM and 35 V for isolated conductors. If ESD sensitive devices (ESDS) of less than these values are being handled, additional controls can be implemented or some of the technical control item requirements can be adjusted.

The requirements established for each of the ESD control items are specified for an ESD control program designed for 100 V HBM, 200 V CDM and 35 V for isolated conductors. The 100 V HBM value is predicated on maximum voltage levels attainable on an individual when they are grounded via techniques accepted throughout the electronics industry as outlined in IEC 61340-5-1.

For organizations concerned with charged device model damage, IEC 61340-5-1 establishes requirements concerning the use of insulators in the ESD protected area (EPA) based on maximum electrostatic field limits.

Any contact and physical separation of materials or flow of solids, liquids, or particle-laden gases can generate electrostatic charges. Common sources of ESD include charged: personnel, conductors, common polymeric materials, and processing equipment. ESD damage can occur when:

- a charged person or object comes into contact with an ESDS;
- an ESDS comes into direct contact with a highly conductive surface while exposed to an electrostatic field;
- a charged ESDS comes into contact with another conductive surface which is at a different electrical potential. This surface may or may not be grounded.

Examples of ESDS are microcircuits, discrete semiconductors, thick and thin film resistors, hybrid devices, printed circuit boards and piezoelectric crystals. It is possible to determine device and item susceptibility by exposing the device to simulated ESD events. The level of sensitivity, determined by test using simulated ESD events, may not necessarily relate to the level of sensitivity in a real life situation. However, the levels of sensitivity are used to establish a baseline of susceptibility data for comparison of devices with equivalent part numbers from different manufacturers. Three different models have been used for qualification of electronic components – human body model (HBM), machine model (MM), and charged device model (CDM). In current practice, devices are qualified only using HBM and CDM susceptibility tests.

The general principles described in IEC 61340-5-1 are not limited in their applicability to ESDS with ESD sensitivities defined in IEC 61340-5-1 (e.g. 100 V HBM). For organizations that handle ESDS with withstand voltages higher or lower than those defined in IEC 61340-5-1, the general principles of IEC 61340-5-1 can still be used. The organization can modify some of the required limits specified in Tables 2 to 3 of IEC 61340-5-1:2016. The program documentation identifies the lowest ESDS withstand voltage(s) that can be handled,

AVA Documents
Document Sharing Hub

and if different to those defined in IEC 61340-5-1, appropriate changes to the limits specified in IEC 61340-5-1 can be made in the program documentation.

The fundamental ESD control principles that form the basis of IEC 61340-5-1 are as follows:

a) Avoid a discharge from any charged, conductive object (personnel, equipment) into the sensitive device:

   It is preferred that all conductors that may come into contact with ESDS including personnel, are bonded or electrically connected to a known ground or contrived ground (as on shipboard or on aircraft). This attachment creates an equipotential balance between all items and personnel. Electrostatic protection can be maintained at a potential different from “zero” voltage ground potential, as long as all items in the system are at the same potential. If a conductor that cannot be grounded (e.g. isolated conductor) comes into contact with an ESDS, the ESD risk should be evaluated and if necessary mitigated.

b) Avoid a discharge from any charged ESD sensitive device (the charging process that can lead to a discharge can result from direct contact and separation or can be field induced):

   Insulators cannot lose their electrostatic charge by grounding. It is preferred that insulators should be removed from the vicinity of ESDS. Some insulators are essential to the process or product and cannot be removed from the vicinity of the ESDS. Ionization or other mitigating techniques can provide neutralization of charges on these essential insulators (circuit board materials and some device packages are examples of essential insulators). Assessment of the ESD hazard created by electrostatic charges on the essential insulators in the work place is done to ensure that appropriate actions are implemented, according to the risk.

c) Once outside of an electrostatic discharge protected area (hereafter referred to as an EPA) it is generally not possible to control the above items, therefore, ESD protective packaging can be used. ESD protection can be achieved by enclosing ESD sensitive products in static protective materials, although the type of material depends on the situation and destination. Inside an EPA, static dissipative materials may provide adequate protection. Outside an EPA, low charging and static discharge shielding materials are recommended. While all of these materials are not discussed in this document, it is important to recognize the differences in their application. Requirements and associated test methods for ESD protective packaging are specified in IEC 61340-5-3.

Each organization has different processes, and so there will be a different blend of ESD prevention measures for an optimum ESD control program. It is vital that these measures are selected, based on technical necessity and carefully documented in an ESD control program plan, so that all concerned can be sure of the program requirements.

Training is an essential part of an ESD control program in order to ensure that the personnel involved understand the equipment and procedures they are to use in order to be in compliance with the ESD control program plan. Training is also essential in raising awareness and understanding of ESD issues. Without training, personnel are often a major source of ESD risk. With training, they become an effective first line of defence against ESD damage.

Regular compliance verification checks and tests are essential to ensure that equipment remains effective and that the ESD control program is correctly implemented in compliance with the ESD control program plan.

Documents
Document Sharing Hub

Full document details: PD IEC/TR 61340-5-2:2018

ELECTROSTATICS –

Part 5-2: Protection of electronic devices from electrostatic phenomena – User guide

1 Scope

This part of IEC 61340, which has been developed to support IEC 61340-5-1, applies to activities that: manufacture, process, assemble, install, package, label, service, test, inspect, transport or otherwise handle electrical or electronic parts, assemblies and equipment with withstand voltages greater than or equal to 100 V HBM, 200 V CDM and 35 V for isolated conductors. Additional control elements or adjusted limits can be applicable for ESDS with lower withstand voltages.

NOTE Isolated conductors were historically represented by MM.

2 Normative references

The following documents are referred to in the text in such a way that some or all of their content constitutes requirements of this document. For dated references, only the edition cited applies. For undated references, the latest edition of the referenced document (including any amendments) applies.

IEC 61340-5-1:2016, *Electrostatics – Part 5-1: Protection of electronic devices from electrostatic phenomena – General requirements*

3 Terms, definitions and abbreviated terms

3.1 Terms and definitions

For the purposes of this document, the terms and definitions given in IEC 61340-5-1 apply.

ISO and IEC maintain terminological databases for use in standardization at the following addresses:

- IEC Electropedia: available at http://www.electropedia.org/
- ISO Online browsing platform: available at http://www.iso.org/obp

3.2 Abbreviated terms

AHE automated handling equipment

CDM charged device model

CPM charged plate monitor

DUT device under test

EPA ESD protected area

ESD electrostatic discharge

ESDS ESD sensitive device

HBM human body model

MM machine model

MVTR moisture vapour transmission rate

Documents
Document Sharing Hub

Full document details: PD IEC/TR 61340-5-2:2018

PPE personal protective equipment

RC resistor-capacitor

4 Personnel safety

The procedures and equipment described in this document may expose personnel to hazardous electrical conditions. Users of this document are responsible for selecting equipment that complies with applicable laws, regulatory codes and both external and internal policy. This document cannot replace or supersede any requirements for personnel safety.

Electrical hazard reduction practices should be exercised and proper grounding instructions for equipment should be followed.

5 ESD control program

5.1 General

5.1.1 ESD control program requirements

The program includes both administrative and technical requirements as described in IEC 61340-5-1, which requires the organization to establish, document, implement, maintain and verify the compliance of the program.

5.1.2 ESD coordinator

An ESD coordinator is a person appointed by the organization to be responsible for organizing and maintaining the ESD control program. In order to have a well thought out and implemented ESD control program, IEC 61340-5-1 requires that an ESD coordinator be assigned. The ESD coordinator is responsible for all aspects of ESD in the facility. In order to be effective the ESD coordinator needs:

a) the full support of management;

b) a good understanding of electrostatics and how ESD sensitive devices can be damaged; the ESD coordinator will often need to attend educational classes or seminars related to ESD in order to maintain or update knowledge;

c) a thorough understanding of IEC 61340-5-1 and all of the organization's processes related to the handling of ESD sensitive devices.

d) access to measuring equipment for the purposes of performing compliance verification measurements as well as testing new ESD products and materials for use in the ESD control program;

e) depending on the size of the facility, the ESD coordinator might also need to have auditors assigned to conduct the ESD audits.

Finally, management should provide the ESD coordinator with the authority and funding necessary to ensure that the ESD control program is maintained and enforced.

5.1.3 Tailoring

It is possible that portions of IEC 61340-5-1 may not apply to all areas within an organization. In these situations it is acceptable for the organization to document an exception to one or more of the required elements of IEC 61340-5-1 as long as there is a valid, substantiated and documented justification for the exception. An example of an acceptable exception to IEC 61340-5-1 can be found in the sample ESD control program plan at the end of this document (Annex A).

Documents
Document Sharing Hub

Full document details: PD IEC/TR 61340-5-2:2018

5.2 ESD control program administrative requirements

5.2.1 ESD control program plan

5.2.1.1 General

This clause outlines a step-by-step approach that can be used to establish an ESD control program.

5.2.1.2 Determination of ESD withstand voltage

One step in developing an ESD control program plan is to determine the part, assembly or equipment sensitivity level under which the plan is to be developed. Although the requirements outlined in IEC 61340-5-1 are effective for handling parts sensitive to 100 V HBM or 200 V CDM or higher, the organization may choose to develop an ESD control program based on ESD sensitivities that are greater or less than these limits. In this situation, the organization should develop an ESD control program plan that clearly states the ESD sensitivity that the program is based on.

The organization can use various methods to determine the ESD sensitivity of the products that are to be handled. Any of the following methods may be used:

- assumption that all ESDS products have an HBM withstand voltage of 100 V and 200 V CDM;
- actual testing of ESD sensitive devices to establish the ESD withstand voltage using IEC standards (see Bibliography);
- referencing ESD withstand voltage data in published documents such as manufacturer's published data sheets.

For more information see the Industry Council on ESD target levels white papers (www.esdindustrycouncil.org).

5.2.1.3 Initial process and organizational assessment

Before the ESD control program plan can be developed, an initial assessment of the processes and organizations impacted by an ESD control program should be conducted. Organizations and processes that might be affected include (this list represents examples of areas involved):

- purchasing (purchasing the qualified ESD control items);
- design engineering (selecting components/materials with consideration of ESD issues);
- receiving and inspection (taking care of handling ESD susceptible components as well as secondary packaging);
- quality assurance;
- manufacturing (design and operation of manufacturing lines);
- testing;
- maintenance (production/grounding);
- packaging and shipping;
- field service (implement ESD control during field service operations);
- failure analysis;
- repair services;
- spare parts storage;
- material handling and parts conveyance;
- facility management (e.g. cleaning/grounding).

Documents
Document Sharing Hub

Full document details: PD IEC/TR 61340-5-2:2018

An assessment of each area where ESDS parts are handled should be conducted in order to determine ESD hazards and the appropriate ESD control process procedures. The information accumulated throughout these steps forms the basis for developing the ESD control program plan.

5.2.1.4 Guidance of how to determine ESD hazards

The first step in determining ESD hazards is to identify whether ESD susceptible components, PCBs or other items (ESDS) are handled in the facility. Most semiconductors and some passive devices are ESDS. In general populated PCBs, modules and similar assemblies should be considered ESD susceptible. If their ESD withstand voltage is not known then assume the product is ESD sensitive. Even PCBs or modules that are fully contained within an enclosure may have some susceptibility to ESD that may enter via a connector or flying leads.

The second step is to identify the processes in which ESDS should be handled in an unprotected state. These processes may be manual or automated. A major contribution to ESD protection may be made by minimizing handling of ESDS in an unprotected state. Where handling is necessary, some form of ESD control is required – these are defined as ESD protected areas (EPA) in IEC 61340-5-1. All areas in which ESD controls are not applied are unprotected areas. Any ESDS in unprotected areas should be protected within ESD protective packaging of some form.

The third step is to identify the potential ESD sources in each process. The most common of these are;

- a charged person touching the ESDS;
- a charged metal or conductive object, tool or other item touching the ESDS;
- the ESDS becoming charged and touching a conductive item (e.g. metal part or equipment).

Electrostatic fields are not usually in themselves damaging (with a few exceptions). However electrostatic fields help set up the conditions in which ESD can occur because any isolated conductor (e.g. metal parts or the device itself) within the electrostatic field will attain a voltage. If two conductors touch (or become sufficiently close to each other) within an electrostatic field, and at least one is isolated, then ESD will probably occur between them.

A particularly damaging form of ESD can occur when an ESDS comes into contact with a high conductivity (low resistance, e.g. metal) item. An ESD event occurring in this circumstance can have a very short duration high discharge current. The susceptibility of the ESDS to this type of event is characterized by its charged device model (CDM) withstand voltage. This type of damage can often be avoided where the device instead makes contact with a higher resistance (> 10^4 Ω) resistance material.

5.2.1.5 How to determine appropriate ESD measures

It follows that the first step in determining the appropriate ESD control measures is to define the boundary of each EPA. These should then be marked or signed so that personnel can easily identify which areas are EPA and which are unprotected areas. Within the EPAs the ESD control measures can then be determined.

- Personnel handling ESDS are grounded so that they cannot be at a high enough voltage to damage the ESDS that they touch. This normally means that the body voltage on personnel should be reduced to less than the human body model withstand voltage of the ESDS.
- Any metal or conductive items, that make contact with ESDS, are grounded to ensure that they are not charged.

Documents
Document Sharing Hub

Full document details: PD IEC/TR 61340-5-2:2018

- Sources of high electrostatic fields (e.g. charged insulators or equipment that generates external electrostatic fields) are kept far enough away from ESDS not to risk inducing high voltages on the device.
- ESDS are often in an ungrounded state when they make contact with other components or process items; this can create charged device ESD risk. This risk should be managed by use of dissipative materials or reducing voltage differences.

5.2.1.6 Documentation of ESD control program plan

After gathering the above information, the organization is in a position to begin documenting the ESD control program plan. The plan should state the scope of the program which includes the tasks, activities and procedures necessary to protect the ESD sensitive items at or above the ESD sensitivity level chosen for the plan. Although the primary focus of the plan is to outline strategies for meeting the administrative and technical elements of IEC 61340-5-1, other items may be beneficial to incorporate as well. These additional items might include:

- organizational responsibilities;
- defined roles and responsibilities between the organization and subcontractors and suppliers;
- strategies for monitoring product yields and processes that might be important in determining the effectiveness of ESD control measures currently in place or in assessing whether additional measures should be taken;
- approaches for ensuring continual improvement of the ESD control program;
- a list of approved ESD control products and materials.

The administrative and technical elements of IEC 61340-5-1 that need to be addressed in the plan include:

- training plan;
- product qualification;
- compliance verification plan;
- grounding/bonding systems;
- personnel grounding;
- protected areas;
- packaging;
- marking.

5.2.2 Training plan

Training of personnel is a critical element in the implementation of an ESD control program. A sustained commitment and attitude among all personnel that ESD prevention is a valuable, continuing effort by everyone is one of the primary goals of training.

One of the first decisions that is to be made is who will be required to attend ESD training courses. IEC 61340-5-1 requires that, at a minimum, initial and recurrent ESD training be provided to all personnel that handle or otherwise come into contact with ESD sensitive items. This decision seems straight-forward but care should be taken to ensure that all people that handle ESD sensitive devices receive adequate training. One example is the finance department. Many people will immediately state that this group should be exempt from ESD training. However, in some organizations the finance department personnel are involved in the annual physical inventory where parts are counted. In these situations, the finance employees are touching ESD sensitive parts and therefore should receive ESD training in order for the organization to be in compliance with IEC 61340-5-1.

Although it is not a requirement of IEC 61340-5-1, the organization should consider providing some form of ESD training to personnel who do not handle ESD sensitive parts such as:

AVA Documents
Document Sharing Hub

- managers, who may need to understand the implications of, and necessity for ESD prevention;
- cleaning and maintenance personnel who may need to work within the EPA; and
- purchasing personnel responsible for buying ESD susceptible parts and ESD control equipment.

For visitors to the EPA, the person escorting the visitor is responsible for ensuring that they are wearing the ESD control equipment required by the organization and that they understand what they may and may not do within the EPA.

Although personnel training can take several forms (i.e. instructor, computer based, etc.), the preferred technique for initial training is through the use of an instructor. Special care should be exercised in finding a "suitable" instructor. The instructor should have a good understanding of ESD theory and the organization's ESD control program and the processes, procedures and materials prescribed within. In addition, if manufacturing spans more than one culture, careful consideration should be given to customs and religious beliefs. Besides cultural differences, other factors such as education, experience and age should be considered. All training should be carried out in a secure, non-threatening environment.

One of the first steps is to determine the type(s) of ESD training methods that will work best for the organization. Some possible training methods include:

- in-house, instructor-led ESD class;
- in-house, consultant-led class;
- computer based training;
- industry symposia, tutorials and workshops;
- on the job training.

The initial training program should cover the fundamentals of ESD, the details of the organization's ESD control program plan, and each person's role in the ESD control program. The training program should answer the following basic questions:

- what is static electricity?
- how does it occur?
- how does ESD affect product quality?

A careful explanation of the protection process as part of organizations policy should be included. No matter which type of training method is chosen, the program should be designed so that all trainee questions that arise can be answered. In addition, a knowledgeable person in the organization should be available to answer trainee questions once they have begun working. Opening the lines of communication is the beginning of a successful ESD training program. This type of communication should continue in the workplace and form the basis for an ongoing education process. It is a requirement in IEC 61340-5-1 that initial ESD training is provided before personnel handle ESD sensitive devices.

Because ESD control programs cover such a variety of job disciplines and educational levels, it may be necessary to develop special job specific training modules. Advanced modules should emphasize the main concerns of each discipline. Course emphasis should be tailored to each group's specific needs. For example, the modules developed for management, engineering, technicians, cleaning staff and field service could differ significantly because their day-to-day concerns and responsibilities are much different.

Ongoing or refresher training is also vital to any organization's training plan. It should reinforce the basic fundamentals taught during initial training, but also should incorporate program updates and changes and the reasons for those changes. As with the initial training, the organization should decide which type of training will be used and how frequently the recurring training will be required. The method chosen should keep everyone informed,

Documents
Document Sharing Hub

renewing his or her commitment to the total ESD control effort. Recurring training is also a good feedback loop for monitoring the program's effectiveness. Personnel should be encouraged to discuss issues, and make suggestions for improvement in these sessions. Actions can then be assigned to improve the organization's overall ESD control program.

After training (initial or recurring) sessions have been completed, it is important to ensure that the trainee understands and has retained the ESD control program concepts taught during these sessions. IEC 61340-5-1 requires that an objective evaluation technique be incorporated as part of the training plan. This can be accomplished in a number of ways that include written tests, question and answer sessions with an instructor or multiple choice questions at the conclusion of a computer based training session. Regardless of the method selected, the organization should establish a pass/fail criterion for the testing to ensure adequate training has been accomplished. Records of all test results should be maintained. The test records should be stored such that they are readily available to management and customers who want objective evidence that the training portion of the ESD control program plan is being adhered to.

Finally, since IEC 61340-5-1 requires recurring or "refresher" training, a system should be established to highlight when employees are due for retesting and/or recertification.

A repository or central information source of educational ESD control materials should be kept for reference at any time by organization employees. This repository might include:

- material from initial and recurring training sessions;
- ESD bulletins or newsletters;
- videos or CDs;
- computer-based training materials;
- technical papers, studies, standards and specifications;
- ESD control material and equipment product sheets.

5.2.3 Product qualification

It is of great importance for the organization that new ESD control items have the required properties before being allowed into the EPA.

Subclause 5.2.3 will discuss different ways of handling the product qualification procedure of ESD control items that the organization is required to undertake.

The product qualification requirements of the ESD control items are all present in IEC 61340-5-1 and IEC 61340-5-3 with the appropriate references to the test methods; however a tailoring statement might be present in the ESD control program plan that changes acceptance levels or test methods, as well as adding or subtracting ESD control items to the list. If an ESD control item is added to the list, an appropriate test method and acceptance limit should be stated in the ESD control program plan.

The main part of the information regarding the test methods and acceptance limits can be found in IEC 61340-5-1:2016, Table 2 and Table 3.

There are four different acceptable evidences of product qualification:

a) Product data sheets published by the manufacturer of the ESD control item
   1) should include a reference to the required test method, and
   2) should include the test result and other vital information concerning general requirements of IEC 61340-5-1 or IEC 61340-5-3.

Documents
Document Sharing Hub

Full document details: PD IEC/TR 61340-5-2:2018

b) Test reports from an independent test laboratory. The test report should follow the requirements of the test method as well as the general requirements of IEC 61340-5-1 or IEC 61340-5-3.

c) Test reports generated internally by the organization for its own use. The test report should follow the requirements of the test method as well as the general requirements of IEC 61340-5-1 or IEC 61340-5-3.

d) Historical evidence of compliance verification data can be used for product qualification. A general recommendation is that it should contain at least three years of data.

5.2.4 Compliance verification plan

5.2.4.1 General

A compliance verification plan (ensuring that the ESD control items are still functional) is an essential part of any ESD control program. While the compliance verification may occur on a periodic basis, it is considered part of the overall program. However it should not be considered an audit or assessment of the process.

NOTE An assessment or audit of the process is used to confirm that the ESD control program complies with all the requirements in IEC 61340-5-1. This is typically done in accordance with a quality management system with either internal or external assessors. If desired, third party external assessment could lead to certification that the ESD control process complies with IEC 61340-5-1. This type of assessment not only reviews the technical elements defined, but ensures that all administrative elements, such as product qualification and training, meet all the requirements.

5.2.4.2 Development of a compliance verification plan

Subclause 5.2.4.2 will discuss the importance of having a properly implemented compliance verification plan and its role in maintaining a successful ESD control program.

In order for the ESD control program to be successful it is essential to develop a plan for on-going surveillance. The plan should identify:

- the ESD control items that will be used,
- how often the item will be checked to ensure that it meets specification,
- the acceptable limits for each ESD control item used,
- the test methods that will be used to verify that each ESD control item is within established parameters,
- the equipment that will be used to check the various ESD control items,
- who will make the measurements,
- what will be done if an out of compliance situation occurs.

Compliance verification should be done after an ESD control item is installed and before it is used.

5.2.4.3 ESD control items

There are many ways to establish an ESD control program. A program can range from a very simple, low cost or basic system to an extensive system that uses a variety of control items that provide redundancy in the event that the primary ESD control element(s) were to fail.

A basic ESD control program might include the following items:

a) a grounded work surface;

b) personnel grounded through a wrist strap system;

c) ESD protective packaging to move ESDS from one process step to the next.

Documents
Document Sharing Hub

Full document details: PD IEC/TR 61340-5-2:2018

An extensive ESD control program might include the following items:

1) grounded work surfaces;
2) personnel grounded through constant wrist strap monitor;
3) personnel grounded to a ESD control floor through ESD control footwear;
4) personnel wearing grounded ESD control garments;
5) air ionization at each workstation.

The decision on what to include in an ESD control program is a matter of organization choice. Some of the considerations are: value of the products being manufactured, product reliability requirements imposed by the customer and the ESD sensitivity of the devices being handled. One type of program is not necessarily any better than the other as each can be effective in protecting ESD sensitive devices.

Once the ESD control items have been defined and implemented, the organization needs to develop a compliance verification plan. In order to establish meaningful data concerning improving or deteriorating ESD control program trends, it is necessary to evaluate each area consistently every time. Many organizations find that properly designed compliance verification plan helps improve consistency.

5.2.4.4 Verification frequency

The frequency for checking the function of ESD control elements is dependent on a number of factors such as how often the item is used, the item's durability and the impact on the ESD control program if the control item were to fail. As an example, wrist straps are often used as the primary ground for personnel. A ground cord, whilst being worn, is subjected to thousands of stretch/bend cycles each day and the conductive wire(s) in the ground cord will eventually break. The typical verification frequency, used by industry, for ground cords is once per shift due to the ground cord's importance to the success of the program and the likelihood of failure.

Some organizations may want to increase the time between verifications of an ESD control item after it has been in use for a period of time. This is typically done by monitoring the failures of the ESD control item. Once the organization has evidence that there is an acceptable period of time where no failures were found, the time between verifications can be increased. The new verification interval is then monitored. If an unacceptable level of failures is identified, then the verification frequency should revert back to the previous level.

5.2.4.5 Verifications

5.2.4.5.1 Types of verifications

There are several types of verifications in use by industry today. These verifications are often used in combination to maximize the effectiveness of the ESD control program.

5.2.4.5.2 Visual verifications

Visual verifications are used by many organizations to check the general state of the EPA. They can be used by employees at the start of the shift to ensure that all ground wires are in place and that unnecessary static generators have been removed from the workplace. Visual verifications can also be used by management and supervisory personnel to ensure that employees are following organization guidelines with respect to daily testing of wrist straps, the proper wearing of ESD control garments and the correct wearing of wrist straps and ESD control footwear. A visual verification is often a good indication of whether or not an ESD control program is being followed.

Documents
Document Sharing Hub

Full document details: PD IEC/TR 61340-5-2:2018

5.2.4.5.3 Measurement verifications

Most organizations rely on verifying that the ESD control items function through the use of actual measurements. These types of verifications are carried out by specially trained personnel using equipment that has been selected to properly measure each ESD control items. Some organizations measure 100 % of each control element in use throughout the factory while others perform verifications on a sample basis. The type of verification used is up to the organization implementing IEC 61340-5-1 as long as it proves to be effective.

5.2.4.6 ESD control item requirements

In the past, many organizations were forced to develop their own test procedures and establish the requirements for the ESD control items that they used. However, ESD control has advanced to the point where there are generally accepted requirements for many of the ESD control items that are used. Establishing an ESD control program around the requirements found in IEC 61340-5-1 will drastically reduce the possibility that ESD susceptible devices will be damaged by an ESD event.

There might be instances where it is necessary to tighten the requirements. An example of this situation occurs when the organization designs an ESD control program around a device with an ESD withstand voltage of less than the levels specified in the scope of IEC 61340-5-1.

5.2.4.7 Test methods

In order to implement IEC 61340-5-1, it is a requirement that the organization follows the test methods or standards specified in IEC 61340-5-1:2016, Table 1 to Table 3. It is recognized that some organizations have developed their own test methods or use other standard methods for verifying some of the ESD control items. This is allowed under IEC 61340-5-1. If the organization does not use the standards referenced in IEC 61340-5-1, a tailoring statement should be included in the ESD control program plan that describes the technical justification for not using the referenced standards.

The test methods listed in the tables are intended primarily for qualifying products and materials for use by an organization. A modified version of the test method is often used by the organization for making measurements that comply with IEC 61340-5-1.

It is very important that everyone involved in measuring the ESD control items understands how the measurements are to be made. The organization should select and document procedures for making each of the measurements. The organization should also ensure that everyone involved in taking measurements understands the testing procedures.

5.2.4.8 Test equipment

It is very important that the organization selects the proper equipment for making compliance verification measurements. It is best to select equipment that complies with the equipment specified in the individual IEC test methods or standards referenced in IEC 61340-5-1:2016, Table 1 to Table 3. Each of the technicians should be trained in how to properly use the measuring equipment.

5.2.4.9 Assessments

5.2.4.9.1 Assessor skills

As part of developing an ESD control program that is compliant with IEC 61340-5-1, it is important that the right people be selected to assess the ESD control program. Some considerations for selecting internal assessors include the following:

- The internal assessor should be familiar with IEC 61340-5-1 as well as the organization's specific ESD control program.

Documents
Document Sharing Hub

Full document details: PD IEC/TR 61340-5-2:2018

- The internal assessor should also understand how the ESD control program fits into the organization's quality management system. ESD assessment findings are one example. How does the organization handle non-conformances found during assessments? How are ESD assessment findings documented? Are corrective action reports generated? Prior to closing a corrective action, does the assessor verify that the audit finding has been corrected?
- It is preferred that the internal assessor has received training on how assessments are conducted.
- The ESD assessor should have a good understanding of the processes that they will be assessing.

5.2.4.9.2 Reporting of assessment findings

It is important to keep management informed about the status of the ESD control program. This can be accomplished through issuing reports at the completion of an assessment. The ESD coordinator will need to classify the severity of each non-conformance. Major non-conformances should be addressed before those considered to be minor in nature. For significant ESD non-compliance issues, management should be notified immediately so that proper resources can be assigned to correct the problem.

There are many ways to make management aware of the ESD findings. Assessment charts are commonly used to report the assessment results. The chart, at a minimum should identify:

- the number of findings;
- the type of finding;
- the area assessed.

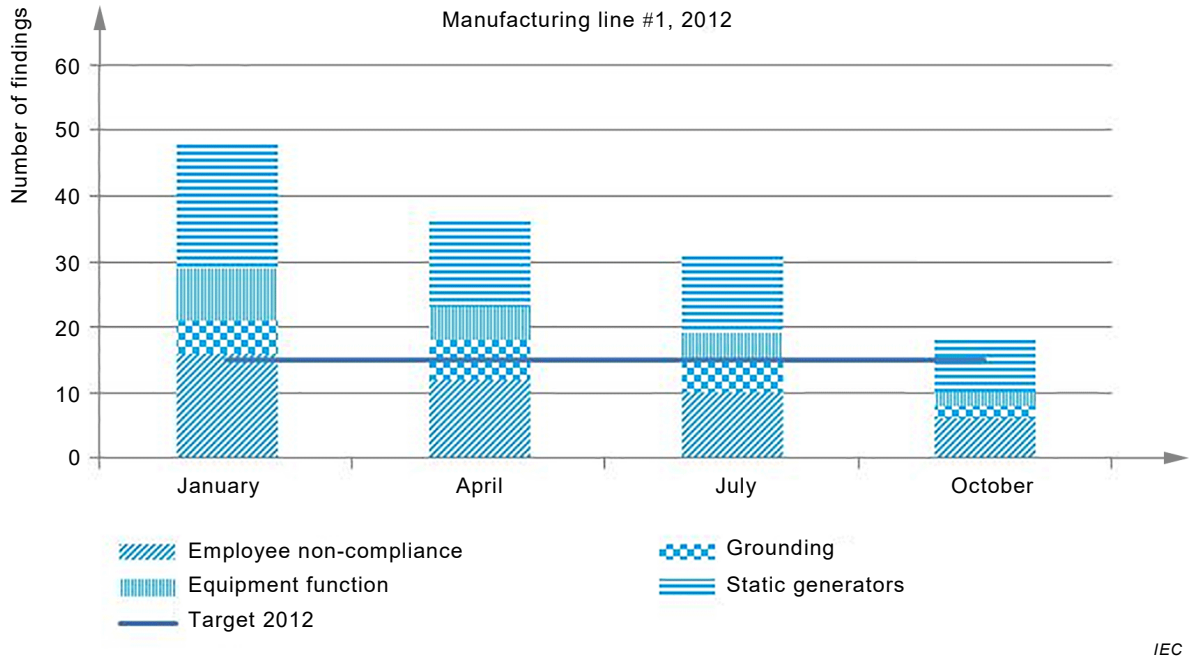

Figure 1 – Example assessment report showing trend report

The information contained in Figure 1 shows management the status of the ESD control program and the items that are the largest source of non-conformances, as well as the fact that the ESD control program is decreasing the number of findings. However the target level is not reached by October.

Documents
Document Sharing Hub
Full document details: PD IEC/TR 61340-5-2:2018

5.3 ESD control program technical requirements

5.3.1 Grounding/equipotential bonding systems

5.3.1.1 General grounding/equipotential bonding considerations

The protection of ESDS is accomplished by providing a ground path to bring ESD protective materials and personnel to the same electrical potential. All conducting items in the environment, including personnel, should be bonded or electrically connected to a known ground or common connection point. This connection results in a sharing of charge which equalizes the voltage across all items and personnel and eliminates the chances of an ESD event to ESD sensitive devices from those items in the bonded and grounded environment. Electrostatic protection can be maintained at a potential different from a "zero" voltage ground reference as long as all items in the system are at the same potential.

The upper limit of resistance to ground of the surface on which ESDS may be placed in IEC 61340-5-1, is less than the upper limit of resistance of some packaging material. Some materials, which are acceptable for packaging applications should not be used as a groundable surface when working on unprotected ESDS.

It is important to understand that insulators cannot lose their electrostatic charge by connection to ground. The handling of insulators is dealt with in 5.3.3 d).

The following subclauses are provides guidance and procedures needed to establish an effective path to ground. This discussion is limited to grounding for ESD purposes.

5.3.1.2 Basic grounding requirements

5.3.1.2.1 Common ground points and common connection points

The first step in ensuring that everything in an EPA is at the same electrical potential is to electrically bond all conductive components of the work area (work surfaces, people, equipment, etc.) to one of the following points:

a) common ground point connected to protective earth or functional ground, or

b) common connection point.

The layout and terminology used to define electrical power systems may vary between different regulations and standards, but the general principles should be similar. Nevertheless, organizations should consult IEC 60364-1 and national electrical codes/regulations before connecting any ESD control items to electrical power systems.

5.3.1.2.2 Grounding using protective earth

The preferred ESD ground utilizes the protective earth, also known as equipment grounding conductor, which is a part of the electrical power system. Using protective earth as ESD ground for ESD control items ensures that the ESD control items and all powered electrical equipment are at the same potential.

5.3.1.2.3 Grounding using functional ground

In situations where the organization does not wish to use the protective earth, or a protective earth is not available, a functional ground can be used. The functional ground is a separate earth grounding electrode that is used as the ESD ground for all the ESD control items used by the organization. It is recommended that, if possible, the functional ground system be bonded to the electrical ground system (when available) in order to eliminate differences in potential between the two grounding systems.

Documents
Document Sharing Hub

Full document details: PD IEC/TR 61340-5-2:2018

5.3.1.2.4 Common connection point (equipotential bonding)

Where a ground system is not available, an ESD control program can still be established by connecting all of the ESD control items and other large conductors together at a common connection point. The common connection point is not connected to ground, but the items attached to the common connection point will all be at the same potential, which minimizes the chance of the ESDS being damaged. The common connection point can be a single conductive point where the grounding wires of each of the ESD control items are attached or it can be a large conductive element such as the metal frame of a workstation.

A real life example of this is often observed in office equipment field service operations. For safety reasons, the service technician will often disconnect the AC power cord which detaches the equipment from ground. In order to install ESD sensitive boards or components into the equipment it is necessary to electrically connect or bond together the service technician, the equipment frame and the ESD sensitive product. Once bonded together, an ESD event will not occur between bonded items when the technician handles the product or installs it in the office equipment.

5.3.1.3 Additional grounding considerations

Aircraft, ships and surface vehicles typically have a ground bus or ground conductor that is suitable for use as an ESD ground. This scenario is similar to the equipotential bonding situation.

It is a good practice for each grounded work surface to be directly connected to common ground point. Figure 2 is an example of the recommended method. Many organizations however connect work surfaces to ground in series as shown in Figure 3. Connecting the work surfaces together in series can lead to a situation where multiple work surfaces become detached from ground if the single grounding wire breaks and therefore this type of grounding method is not recommended.

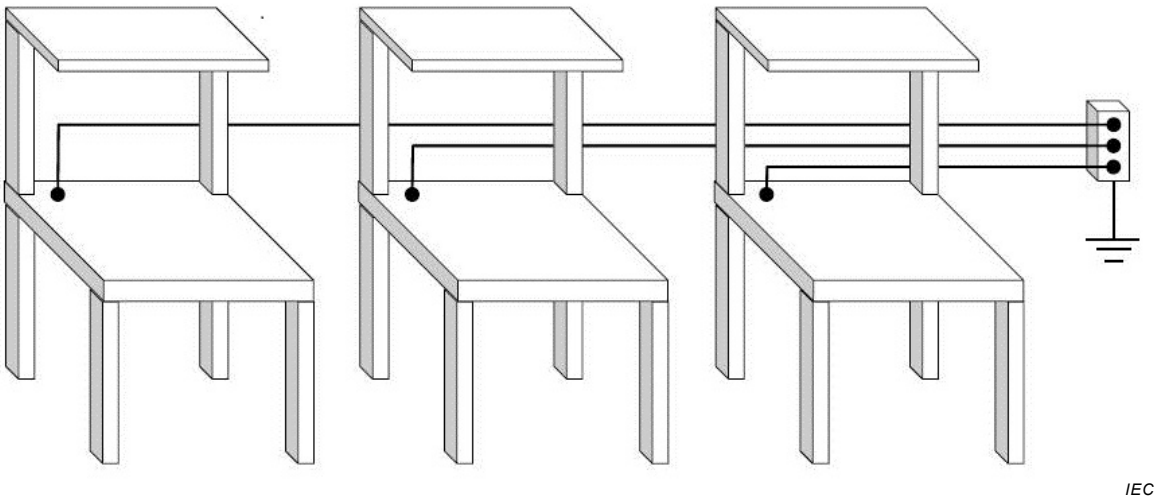

Figure 2 – Example of individually grounded benches – Recommended

Documents
Document Sharing Hub
Full document details: PD IEC/TR 61340-5-2:2018

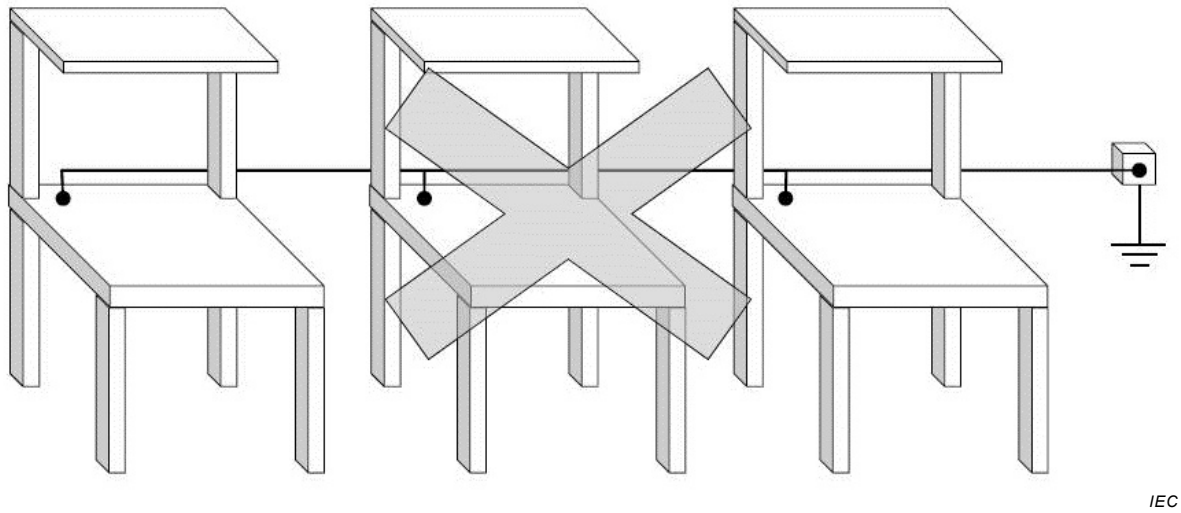

Figure 3 – Example of a series ground connection of benches – Not recommended

5.3.1.4 Verification of ESD grounding system

5.3.1.4.1 Protective earth

For ESD control programs that use the protective earth to ground the ESD control items it is necessary to verify the integrity of the electrical system. The values used can vary depending on the electrical code requirements in each country. However, there are certain items that should be checked for any ESD control program that uses the protective earth.

- The impedance of the protective earth should meet national electrical code requirements.
- The electrical system is correctly wired to ensure that the ESD control items are attached to ground and not to an energized portion of the electrical system.

5.3.1.4.2 Functional ground

When a functional ground is used it is necessary to verify that the ground rod system meets national electrical codes for such systems. If no code exists then measure the resistance between functional ground and protective earth and check that it complies with the specified value of IEC 61340-5-1.

5.3.1.4.3 Equipotential bonding

Where an equipotential bonding system is used, it is important to verify the electrical connection between common connection points.

5.3.1.5 Verification of proper installation of ESD control items

Once the ESD ground has been verified it is important to ensure that each of the ESD control items used is correctly connected to the ESD ground. Using the test method and limits for each ESD control item given in IEC 61340-5-1:2016, Table 2 and Table 3, verify that the resistance to ground (or to the common connection point) meets the required limit.

5.3.2 Personnel grounding

5.3.2.1 General grounding considerations

Personnel grounding is a critical technical element required in IEC 61340-5-1 and should be addressed any time personnel are involved with the handling of unprotected ESD sensitive devices. There are two means by which this requirement can be met. The first is by use of a wrist strap system and the second is by use of a flooring/footwear system. The choice is

AVA Documents
Document Sharing Hub

dependent on several factors that include the physical actions and surroundings of the individual as well as the potential cost of each alternative. Both system techniques include the person, the control items (i.e. wrist strap, flooring, and footwear) and the connection to ground. Wrist strap, flooring and footwear types, uses, and other key information about each are described in 5.3.2.2 and 5.3.2.3.

5.3.2.2 System requirements

Electrostatic charge can accumulate on the body through movement. The charge results in an electrostatic voltage between the body and ground. This charge can be damaging if discharged to ESDS. The procedures outlined in IEC 61340-5-1 are designed to protect devices sensitive to human body model voltages of 100 V or greater. To maintain a person's body voltage to less than 100 V, the body should be electrically connected to ground or differences in potential should be eliminated by bonding all of the ESD control elements together.

With a grounded system, there should be some degree of assurance that the body voltage remains below 100 V when connected in series with a resistance to ground. This resistance is a key factor in limiting the voltage observed on the body. For a given body movement, the voltage achieved increases with resistance. Tests have shown that a resistance of 3,5 x 10^7 Ω or less is necessary to limit body voltage for personnel using a wrist strap system to less than 100 V. Figure 4 shows the relationship between body voltage and resistance to ground for a given experimental setup. For an ESD control program that uses ESD control footwear and flooring to ground personnel, the situation is more complex. As people walk across an ESD control floor while wearing ESD control footwear, it is difficult to predict the voltage on a person's body due to the constantly changing body capacitance and the continuous charging and discharging of the person.

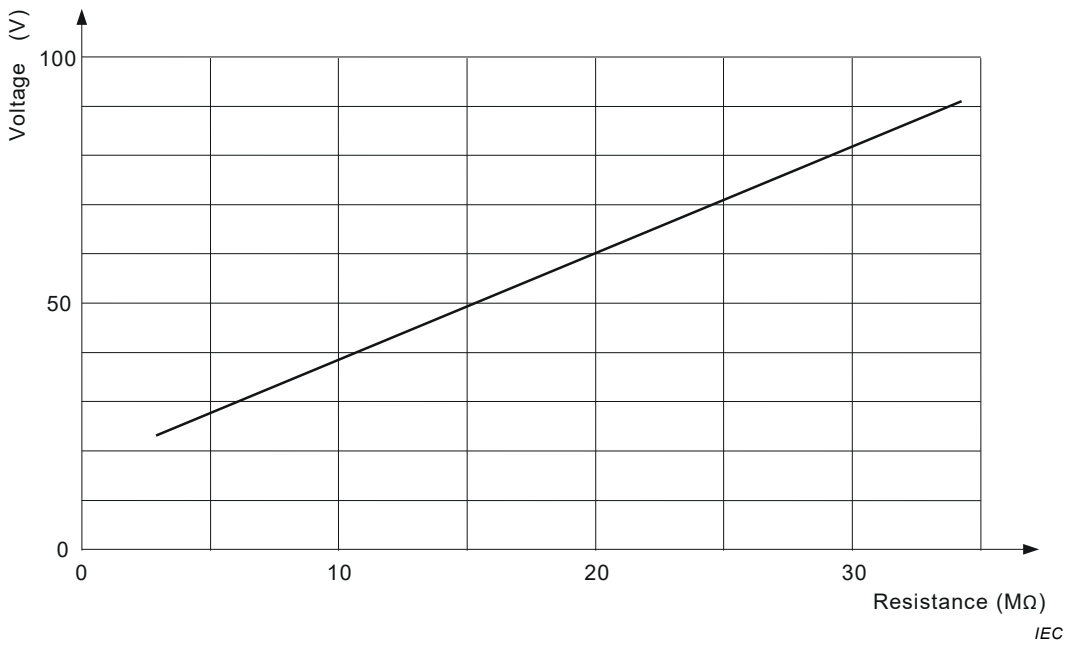

Figure 4 – Relationship between body voltage and resistance to ground

5.3.2.3 Wrist strap system

A wrist strap system consists of three elements: a person, a ground cord and a wrist band. To ensure that the resistance to ground of personnel is within the specifications, it is important to measure the entire system (i.e. from the person's body to the end of the ground cord).

A wrist strap assembly is the most commonly used means of grounding personnel. A wrist strap is required in IEC 61340-5-1 for operations where the individual is seated while handling

Documents
Document Sharing Hub
Full document details: PD IEC/TR 61340-5-2:2018

or processing ESD sensitive items or components. The reason for this requirement is that floor and footwear systems may not provide reliable contact with ground since the person's feet may not be in contact with the floor at all times while seated.

While a wrist strap assembly will ground a person when standing, often the ground cord will become a physical impediment to the wearer. In these situations, organizations will often rely on a footwear-flooring system to ground their employees.

5.3.2.4 Footwear-flooring system

Personnel may also be grounded through use of a flooring and footwear system. This method is useful when personnel require mobility or stand in areas where wrist straps are not feasible and ESDS items should be handled or transported. The ground path is maintained through the use of dissipative or conductive floors and dissipative or conductive footwear. Footwear-flooring systems may be installed to provide a back-up ESD control item for personnel grounded with a wrist strap system.

When footwear-flooring systems are used as the only grounding system for personnel, the resistance to ground including the person, footwear, floor and body voltage generation needs to be less than specified in IEC 61340-5-1, under worst case environmental conditions. For this reason it is good practice to test at different times of the year when different humidity conditions may be experienced so that worst case conditions can be found.

For reasons such as safety, minimum resistance limits should be considered with reference to local regulations.

Some of the ESD control footwear options include ESD control shoes, sole and heel grounding straps and shoe covers. If the ESD control footwear does not completely cover the underside of the foot, charge generation may occur, especially when a person is walking. An example of this occurs with the use of heelstraps. The following chart (Figure 5) shows the voltage on a person's body as they walk across a grounded conductive floor while wearing two heelstraps. The voltage on the person's body is not controlled because the heelstrap is not in continuous contact with the conductive flooring surface.

Documents
Document Sharing Hub

Full document details: PD IEC/TR 61340-5-2:2018

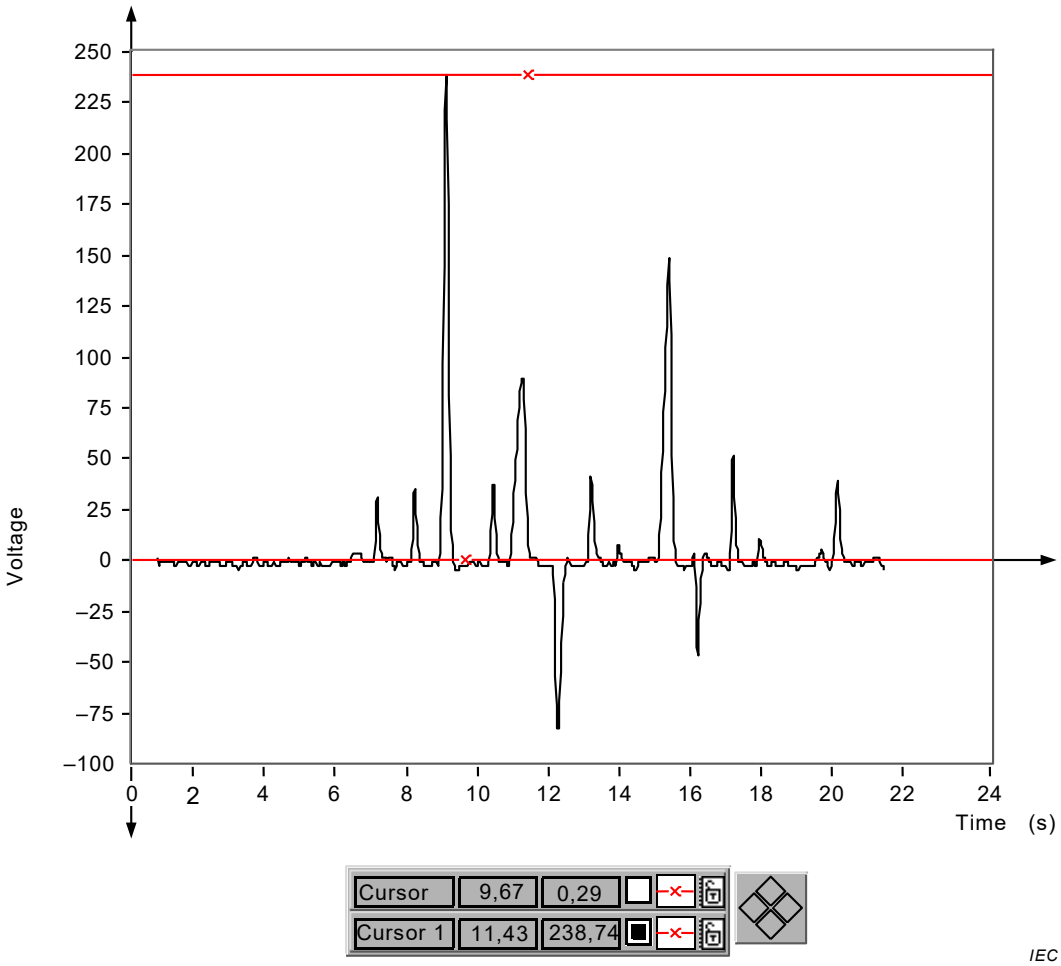

Figure 5 – Voltage reading on person walking across grounded conductive floor whilst wearing two heelstraps

Heelstraps can still be an effective part of an ESD control program when used for standing operations providing a strap is worn on each foot, and the ESD risk due to occasional loss of the ground connection is assessed to be acceptable. They should not be used in any process where unprotected ESDS are transported inside the EPA by hand.

Two complementary test methods are used to measure the footwear-flooring system in combination with a person and described in IEC 61340-4-5.

a) The first test method was developed to measure the electrical system resistance of floor materials in combination with a person wearing ESD control footwear. This test can be used to evaluate systems prior to installation or it can be used with installed floors. This test method can be used to characterize any ESD control floor material. These include all floor coverings (e.g. tiles, carpets, epoxies, laminates, mats, paints/coatings or floor finishes).

b) The second test method provides a way to characterize the ESD behaviour of floor materials and footwear by measuring the charge generation of the floor, footwear and person as a system. This test method can be used to evaluate systems prior to installation or it can be used with installed floors. This test method can be used to characterize any ESD control floor material. These include all floor coverings (e.g. tiles, carpets, epoxies, laminates, mats, paints/coatings or floor finishes).

Documents
Document Sharing Hub
Full document details: PD IEC/TR 61340-5-2:2018

5.3.3 ESD protected areas (EPA)

5.3.3.1 General considerations for EPA

An ESD protected area (EPA) is an area that is equipped with the ESD control items required to minimize the chance of damaging ESD sensitive devices.

In the broad sense, an EPA is capable of controling static electricity on all the items that enter that work area. Personnel and other conductive or dissipative items should be electrically bonded together and connected to ground (or a common connection point when a ground is not available) to equalize electrical potential among the items. The size of an EPA can vary greatly. An EPA may be a permanent workstation within a room or an entire factory floor encompassing thousands of workstations. An EPA may also be a portable worksurface or mat as used in a field service situation.

IEC 61340-5-1 places several requirements on the handling of ESDS as follows:

1) ESD sensitive devices should be handled inside an EPA. This means that at any operation where unprotected ESDS are handled, all of the items that potentially could come into contact with ESDS should either be connected to the defined ESD ground or connected together to form an equipotential bond. If the ESD sensitive device should leave the EPA, it should be protected from damage. ESD protective packaging or specially designed carriers can be used to transport ESDS from one EPA to another.
2) An EPA should have a well-defined boundary. Appropriate signs and markings should identify protected areas so that all people entering the area, including visitors, are aware that special precautions are needed. Some examples of appropriate signs/markings are physical signs, floor tape outlining the border of the EPA, different coloured floor tiles or any other method that defines the border of an EPA. The organization should ensure that ESD awareness training clearly describes to the new employees the rules for the EPA and how it is identified.
3) Access to the EPA is restricted to personnel who have trained on EPA protocols appropriate to their role in the EPA,.for example cleaning personnel are trained not to handle ESDS when inside the EPA. This is sufficient training to enter the EPA in this case. In situations where suppliers, customers, new employees or other visitors need to enter into the EPA, they should be escorted by a person who has completed appropriate training.
4) The organization should ensure that the electrical potential on any isolated conductors that come into contact with ESDS will not exceed 35 V with respect to the ESDS.
5) All non-essential insulators need to be removed from the workstation or any operation where unprotected ESDS are handled. Insulators required as part of the manufacturing process need to be checked to determine whether or not they pose a threat to ESD sensitive devices.

5.3.3.2 Insulators

All non-essential insulators (plastics and paper) such as coffee cups, food wrappers and personal items should be removed from the workstation or any operation where unprotected ESDS are handled.

The ESD threat associated with process essential insulators should be evaluated to ensure that:

- the electrostatic field at the position where the ESDS are handled should not exceed 5 000 V/m or;
- if the electrostatic potential measured at the surface of the process required insulator exceeds 2 000 V, the item should be kept a minimum of 30 cm from the ESDS and;
- if the electrostatic potential measured at the surface of the process required insulator exceeds 125 V, the item should be kept a minimum of 2,5 cm from the ESDS.

Documents
Document Sharing Hub

These measurements are to be made based on the frequency defined in the compliance verification plan.

If it is not possible to maintain measured field at acceptable levels, the organization needs to use ionization or other methods to reduce the levels of charge generated in the process. The use of chemical treatments on the surface of insulating materials or the addition of humidity controls inside the EPA are two possible methods, in addition to ionization, that can be used to reduce the levels of measured electrostatic fields to acceptable levels. The general principles and guidance for measuring electrostatic fields and potentials of insulators are found in IEC TR 61340-2-2 and IEC TR 61340-1.

5.3.3.3 Isolated conductors

Isolated conductors that come into contact with ESDS should be avoided when possible. An ESD control item should not have ungrounded conducting parts or insulators. When establishing an ESD control program plan, if a conductor that comes into contact with an ESDS cannot be grounded or equipotentially bonded together, then the process should ensure that the difference in potential between the conductor and the contact of the ESDS is less than 35 V.

NOTE The 35 V limit is related to the level achievable using the ionizers specified in IEC 61340-5-1 (see also 5.3.3.4.6 in this document).

This can be accomplished by measuring the ESDS and the conductor by using: a non-contact electrostatic voltmeter or a high impedance contact electrostatic voltmeter.

Examples of possible isolated conductors are; test probes, bond wires, hand tools and transport rollers,

5.3.3.4 ESD control items

NOTE Subclauses 5.3.3.4.1 to 5.3.3.4.9 describe some of the various ESD control items that can be used when developing an ESD control program that is compliant with IEC 61340-5-1.

5.3.3.4.1 Work surfaces

5.3.3.4.1.1 Introductory remarks

Work surfaces play a critical role in the design and implementation of an EPA. Work surfaces designed for ESD control are used in production and repair areas as well as in field service. Most areas where unprotected ESDS are handled, repaired or tested require some form of a work surface designed to dissipate electrostatic charges. The work surface is a major component in establishing a local static safe work environment. The work surface is considered by most of the industry to be the second most important element of an ESD control program, personnel grounding being most important.

The main purpose of a properly grounded work surface is to ensure that the items being handled and the work area are at the same electrical potential. Work surfaces provide the following functions:

- a work surface designed for control of static electricity provides an electrical path to ground or a common connection point in the case of an equipotential bonding situation. This allows non-insulating items placed on the work surface to discharge in a controlled manner;
- in some cases the work surface defines the boundary of an ESD work area in which ESDS can be handled.

5.3.3.4.1.2 Factors in selecting work surfaces

There are several factors to be considered in selecting an appropriate work surface. The major factors are the following:

AVA Documents
Document Sharing Hub