PD IEC TR 61340-5-4:2019

BSI Standards Publication

Electrostatics

Part 5-4: Protection of electronic devices from electrostatic phenomena — Compliance verification

Documents
Document Sharing Hub

Full document details: PD IEC TR 61340-5-4:2019

National foreword

This Published Document is the UK implementation of IEC TR 61340-5-4:2019.

The UK participation in its preparation was entrusted to Technical Committee GEL/101, Electrostatics.

A list of organizations represented on this committee can be obtained on request to its secretary.

This publication does not purport to include all the necessary provisions of a contract. Users are responsible for its correct application.

© The British Standards Institution 2019
Published by BSI Standards Limited 2019

ISBN 978 0 580 99214 8

ICS 17.220.99; 29.020

Compliance with a British Standard cannot confer immunity from legal obligations.

This Published Document was published under the authority of the Standards Policy and Strategy Committee on 31 August 2019.

Amendments/corrigenda issued since publication

Date	Text affected

Documents
Document Sharing Hub

Full document details: PD IEC TR 61340-5-4:2019

IEC TR 61340-5-4

Edition 1.0 2019-08

TECHNICAL REPORT

colour inside

Electrostatics –
Part 5-4: Protection of electronic devices from electrostatic phenomena – Compliance verification

INTERNATIONAL
ELECTROTECHNICAL
COMMISSION

ICS 17.220.99; 29.020

ISBN 978-2-8322-7272-5

Warning! Make sure that you obtained this publication from an authorized distributor.

® Registered trademark of the International Electrotechnical Commission

Documents
Document Sharing Hub

Full document details: PD IEC TR 61340-5-4:2019

CONTENTS

FOREWORD 8
INTRODUCTION 10
1 Scope 11
2 Normative references 11
3 Terms and definitions 11
4 Personnel safety 11
5 Test equipment 12
5.1 Selection of test equipment 12
5.2 AC outlet analyzer (or mains socket tester) 12
5.3 AC circuit tester (impedance meter) 12
5.4 Charged plate monitor (CPM) 12
5.4.1 CPM requirements 12
5.4.2 Portable verification kit 12
5.5 Concentric ring electrode assembly 13
5.6 DC ohmmeter 13
5.7 Electrostatic field meter 13
5.8 Electrostatic voltmeter 13
5.9 Foot electrode 13
5.10 Hand-held electrode 13
5.11 Resistance measurement electrode(s) 14
5.12 Insulative support surface 14
5.13 Integrated checker 14
5.14 Two-point probe 14
5.15 Surface resistance bar electrode 14
6 Grounding/bonding systems 15
6.1 Responsibility for checking systems 15
6.2 Objective 15
6.3 Test equipment 15
6.4 Test procedure for wrist strap bonding points 16
6.5 Troubleshooting wrist strap bonding point failures 16
7 Work surfaces 17
7.1 Basis of test procedure 17
7.2 Objective 17
7.3 Test equipment 17
7.4 Test procedure 18
7.5 Troubleshooting 18
7.5.1 Visual/mechanical check 18
7.5.2 Electrical test 18
8 Wrist strap system 19
8.1 Basis of test procedure 19
8.2 Objective 19
8.3 Test equipment 20
8.4 Test procedure 20
8.4.1 Testing with integrated checker 20
8.4.2 Testing with DC ohmmeter 20
8.5 Troubleshooting 20

AVA Documents
Document Sharing Hub

9 Person-footwear system 22
9.1 Basis of test procedure 22
9.2 Objective 22
9.3 Test equipment 22
9.4 Test procedure 22
9.4.1 Testing with integrated checker 22
9.4.2 Testing with DC ohmmeter 22
9.5 Troubleshooting 23
10 Flooring 24
10.1 Basis of test procedure 24
10.2 Objective 24
10.3 Test equipment 24
10.4 Test procedure 25
10.5 Troubleshooting 25
11 Person-footwear-flooring system 25
11.1 Measurement of electrical resistance 25
11.1.1 Basis of test procedure 25
11.1.2 Objective 26
11.1.3 Test equipment 26
11.1.4 Test procedure 26
11.1.5 Troubleshooting 26
11.2 Measurement of body voltage 27
11.2.1 Basis of test procedure 27
11.2.2 Objective 27
11.2.3 Test equipment 28
11.2.4 Test procedure 28
11.2.5 Troubleshooting 28
12 Seating 29
12.1 Basis of test procedure 29
12.2 Objective 29
12.3 Test equipment 29
12.4 Test procedure 29
12.5 Troubleshooting 30
13 Air ionizers 31
13.1 Basis of test procedure 31
13.2 Objective 31
13.3 Test equipment 31
13.4 Test procedure 31
13.4.1 Initial test setup 31
13.4.2 Discharge time test 31
13.4.3 Offset voltage test (balance) 32
13.5 Troubleshooting 32
14 Mobile equipment 32
14.1 Basis of test procedure 32
14.2 Objective 33
14.3 Test equipment 33
14.4 Test procedure 33
14.5 Troubleshooting 34

AVA Documents
Document Sharing Hub

15 Groundable static control garment system 35
15.1 Basis of test procedure 35
15.2 Objective 35
15.3 Test equipment 35
15.4 Test procedure 36
15.4.1 Testing with integrated checker 36
15.4.2 Testing with DC ohmmeter 36
15.5 Troubleshooting 37
16 Static control garments and groundable static control garments point-to-point method 37
16.1 Basis of test procedure 37
16.2 Objective 38
16.3 Test equipment 38
16.4 Test procedure 38
16.5 Troubleshooting 39
17 Static control garments and groundable static control garments hanging clamp method 40
17.1 Basis of test procedure 40
17.2 Objective 40
17.3 Test equipment 40
17.4 Test procedure 40
17.5 Troubleshooting 42
18 Packaging 42
18.1 Basis of test procedure 42
18.2 Objective 42
18.3 Test equipment 42
18.4 Test procedure 43
18.4.1 Surface resistance using an integrated measuring instrument 43
18.4.2 Surface resistance using a concentric ring electrode assembly or two SRBs 43
18.4.3 Surface resistance using a DC ohmmeter and two-point probe 44
18.4.4 Point-to-point using resistance measurement electrode(s) 45
18.4.5 Volume resistance using an integrated checker or DC ohmmeter 46
18.5 Troubleshooting (surface and volume resistance) 47
19 Process required insulators 47
19.1 Basis of test procedure 47
19.2 Objective 47
19.3 Test equipment 47
19.4 Test procedure for measuring electrostatic field strength at the site of the ESD sensitive device (ESDS) from electrostatic field source 48
19.5 Measurement of surface voltage of a process required insulator 48
19.6 Troubleshooting 48
20 Process required isolated conductors 49
20.1 Basis of test procedure 49
20.2 Objective 49
20.3 Test equipment 49
20.4 Test procedures 49
20.5 Troubleshooting 50
Annex A (informative) Test frequency ..... [illegible]

Documents
Document Sharing Hub
Full document details: PD IEC TR 61340-5-4:2019

Annex B (informative) Other test methods for static control garments 52
B.1 General considerations for other test methods 52
B.2 Precautions to be observed when conducting tests 52
B.3 Tribocharging tests for garments 52
B.3.1 Objective 52
B.3.2 Test equipment for body voltage measurements 52
B.3.3 Test procedures for body voltage measurements 53
B.3.4 Test equipment for measuring charge on garments 56
B.3.5 Test procedure for measuring charge on garments 57
B.3.6 Test equipment for measuring electrostatic field or surface voltage on garments 57
B.3.7 Test procedure for measuring electrostatic field or surface voltage on garments 58
B.3.8 Troubleshooting tribocharging tests 58
B.4 Charge decay time tests for garments 59
B.4.1 Objective 59
B.4.2 Test equipment for measuring charge decay time after tribocharging 59
B.4.3 Test procedure for measuring charge decay time after tribocharging 59
B.4.4 Test equipment for measuring charge decay time after corona charging 60
B.4.5 Test procedure for measuring charge decay time after corona charging 60
B.4.6 Test equipment for measuring charge decay time after connection to a DC high-voltage supply 61
B.4.7 Test procedure for measuring charge decay time after connection to a DC high-voltage supply 61
B.5 Field suppression tests for garments 62
B.6 Capacitance loading tests for garments 62
Annex C (normative) Electrical soldering/desoldering hand tools 63
C.1 Basis of test procedure 63
C.2 Objective 63
C.3 Test equipment 63
C.4 Test procedure 63
C.4.1 Soldering/desoldering hand tool tip voltage test procedure (hot iron) using integrated tester or AC millivoltmeter 63
C.4.2 Soldering/desoldering hand tools resistance to ground (hot iron) 64
C.4.3 Soldering/desoldering hand tools resistance to ground (cold iron) 64
C.4.4 Soldering/desoldering hand tools resistance to ground (hot iron) using low resistance meter 65
C.5 Troubleshooting 65
Annex D (normative) Hand tools 66
D.1 Basis of test procedure 66
D.2 Objective 66
D.3 Test equipment 66
D.3.1 Resistance measurements 66
D.3.2 Charge decay time measurements 66
D.3.3 Test procedure for hand tool resistance measurements 66
D.3.4 Test procedure for hand tool resistance to ground measurements 67
D.3.5 Test procedure for charge decay time measurements 68
D.3.6 Troubleshooting 69
Annex E (normative) Constant (continuous) monitors 70
E.1 Basis of test procedure 70

Documents
Document Sharing Hub
Full document details: PD IEC TR 61340-5-4:2019

E.2 Objective 70
E.3 Test equipment 70
E.4 Test procedure 70
E.5 Troubleshooting 70
Annex F (normative) Gloves and finger cots – In use resistance 71
F.1 Basis of test procedure 71
F.2 Objective 71
F.3 Test equipment 71
F.4 Test procedure 71
F.4.1 Integrated wrist strap checker with touch plate and wrist strap 71
F.4.2 Hand-held electrode and DC ohmmeter via wrist strap 72
F.4.3 Integrated footwear checker with foot plate and touch plate, and ESD control footwear 73
F.4.4 Constant area and force electrode (CAFE) with DC ohmmeter and wrist strap 73
F.5 Troubleshooting 75
Annex G (informative) Grounding/bonding systems 76
G.1 Objective 76
G.2 Test equipment 76
G.3 Test procedure 76
G.4 Troubleshooting 76
Bibliography 77

Figure 1 – ESD control workstation 16
Figure 2 – ESD control work surface test 17
Figure 3 – Point-to-point measurement setup 19
Figure 4 – Wrist strap test using integrated checker 20
Figure 5 – Wrist strap test using DC ohmmeter 21
Figure 6 – ESD control footwear test 23
Figure 7 – ESD control flooring test 24
Figure 8 – Person-footwear-flooring system test 27
Figure 9 – ESD control chair test 30
Figure 10 – ESD control mobile equipment test 34
Figure 11 – Testing groundable static control garment system using integrated checker 36
Figure 12 – Test setup – Groundable garment in combination with a person, hand-held probe and DC ohmmeter 37
Figure 13 – Garment (point-to-point) test 39
Figure 14 – Electrodes for hanging garment test 41
Figure 15 – Alternate point-to-point resistance measurement 41
Figure 16 – Setup for test method using concentric ring electrode assembly and surface resistance bar electrodes 44
Figure 17 – Setup for test method using a DC ohmmeter and two-point probe 45
Figure 18 – Setup for test method using two resistance measurement electrodes 46
Figure 19 – Setup for test method using a resistance measurement electrode 47
Figure B.1 – Example of a test setup for measuring body voltage whilst removing a garment 54

AVA Documents
Document Sharing Hub

Full document details: PD IEC TR 61340-5-4:2019

Figure B.2 – Example of a test setup for measuring body voltage whilst rubbing the garment under test 55
Figure B.3 – Example of a test setup for measuring body voltage on a person rising from a seat 56
Figure B.4 – Example of a test setup for measuring charge on garments 57
Figure B.5 – Examples of test setups for measuring charge decay time on garments as worn and on a bench-top after tribocharging 60
Figure B.6 – Example of test setup for measuring charge decay time after connecting a garment to a DC high-voltage supply 62
Figure C.1 – Soldering iron resistance and tip voltage measurements 64
Figure D.1 – Hand tool resistance measurement 67
Figure D.2 – Hand tool resistance to ground measurement 68
Figure D.3 – Hand tool charge decay time measurement 69
Figure F.1 – Wrist strap test wearing a glove using integrated checker 72
Figure F.2 – Glove test with hand-held electrode and DC ohmmeter via wrist strap 73
Figure F.3 – Test wearing a glove using constant area and force electrode 74

Documents
Document Sharing Hub

Full document details: PD IEC TR 61340-5-4:2019

INTERNATIONAL ELECTROTECHNICAL COMMISSION

ELECTROSTATICS –

Part 5-4: Protection of electronic devices from electrostatic phenomena – Compliance verification

FOREWORD

1) The International Electrotechnical Commission (IEC) is a worldwide organization for standardization comprising all national electrotechnical committees (IEC National Committees). The object of IEC is to promote international co-operation on all questions concerning standardization in the electrical and electronic fields. To this end and in addition to other activities, IEC publishes International Standards, Technical Specifications, Technical Reports, Publicly Available Specifications (PAS) and Guides (hereafter referred to as "IEC Publication(s)"). Their preparation is entrusted to technical committees; any IEC National Committee interested in the subject dealt with may participate in this preparatory work. International, governmental and non-governmental organizations liaising with the IEC also participate in this preparation. IEC collaborates closely with the International Organization for Standardization (ISO) in accordance with conditions determined by agreement between the two organizations.
2) The formal decisions or agreements of IEC on technical matters express, as nearly as possible, an international consensus of opinion on the relevant subjects since each technical committee has representation from all interested IEC National Committees.
3) IEC Publications have the form of recommendations for international use and are accepted by IEC National Committees in that sense. While all reasonable efforts are made to ensure that the technical content of IEC Publications is accurate, IEC cannot be held responsible for the way in which they are used or for any misinterpretation by any end user.
4) In order to promote international uniformity, IEC National Committees undertake to apply IEC Publications transparently to the maximum extent possible in their national and regional publications. Any divergence between any IEC Publication and the corresponding national or regional publication shall be clearly indicated in the latter.
5) IEC itself does not provide any attestation of conformity. Independent certification bodies provide conformity assessment services and, in some areas, access to IEC marks of conformity. IEC is not responsible for any services carried out by independent certification bodies.
6) All users should ensure that they have the latest edition of this publication.
7) No liability shall attach to IEC or its directors, employees, servants or agents including individual experts and members of its technical committees and IEC National Committees for any personal injury, property damage or other damage of any nature whatsoever, whether direct or indirect, or for costs (including legal fees) and expenses arising out of the publication, use of, or reliance upon, this IEC Publication or any other IEC Publications.
8) Attention is drawn to the Normative references cited in this publication. Use of the referenced publications is indispensable for the correct application of this publication.
9) Attention is drawn to the possibility that some of the elements of this IEC Publication may be the subject of patent rights. IEC shall not be held responsible for identifying any or all such patent rights.

The main task of IEC technical committees is to prepare International Standards. However, a technical committee may propose the publication of a Technical Report when it has collected data of a different kind from that which is normally published as an International Standard, for example "state of the art".

IEC TR 61340-5-4, which is a Technical Report, has been prepared by IEC technical committee 101: Electrostatics.

Documents
Document Sharing Hub

Full document details: PD IEC TR 61340-5-4:2019

The text of this Technical Report is based on the following documents:

Draft TR	Report on voting
101/581/DTR	101/586/RVDTR

Full information on the voting for the approval of this Technical Report can be found in the report on voting indicated in the above table.

This document has been drafted in accordance with the ISO/IEC Directives, Part 2.

A list of all parts in the IEC 61340 series, published under the general title *Electrostatics,* can be found on the IEC website.

The committee has decided that the contents of this document will remain unchanged until the stability date indicated on the IEC web site under "http://webstore.iec.ch" in the data related to the specific document. At this date, the document will be

- reconfirmed,
- withdrawn,
- replaced by a revised edition, or
- amended.

A bilingual version of this publication may be issued at a later date.

IMPORTANT – The 'colour inside' logo on the cover page of this publication indicates that it contains colours which are considered to be useful for the correct understanding of its contents. Users should therefore print this document using a colour printer.

Documents
Document Sharing Hub

Full document details: PD IEC TR 61340-5-4:2019

INTRODUCTION

Compliance verification is the process of monitoring and measuring all elements of an ESD control program. Regular compliance checks and tests are an essential part of this process, ensure that area precautions and equipment remain effective, and that an ESD control program is correctly implemented in compliance with an ESD control program plan.

Qualification testing is typically carried out under controlled conditions, often in a laboratory environment, and using industry recognized standards. Verification testing is carried out under operational conditions using test methods that are appropriate to an organization's requirements. Although qualification test methods can be used, compliance verification testing often uses simple equipment and procedures. Accuracy is still important, but of equal importance is the ability to carry out non-destructive testing without interrupting the normal business of the organization.

This document describes equipment and test methods that can be used for verification testing of ESD control items and systems, and provides users with some guidance on how to carry out the tests and take appropriate action to ensure continuous compliance.

The compliance verification test frequency is not described in this document. See Annex A for test frequency considerations.

Documents
Document Sharing Hub

Full document details: PD IEC TR 61340-5-4:2019

ELECTROSTATICS –

Part 5-4: Protection of electronic devices from electrostatic phenomena – Compliance verification

1 Scope

This part of IEC 61340 describes compliance verification testing for technical items that are included in ESD control programs, such as those specified in IEC 61340-5-1.

Test methods, in the main body of this document, are based on those specified in IEC 61340-5-1 and other parts of IEC 61340, and are simplified where necessary for the purposes of compliance verification, to be performed by competent personnel.

Additional compliance verification tests and procedures within the scope of this document are described in Annexes B to G.

Users can, by reference to this document in their compliance verification plan, adopt the necessary test methods described herein without change or addition. Alternatively, tests methods described in this document can be adapted to match the requirements of their own ESD control program, provided deviations in equipment or procedure are documented in their compliance verification plan.

Product qualification is excluded from the scope of this document.

2 Normative references

There are no normative references in this document

3 Terms and definitions

For the purposes of this document, the terms and definitions given in the documents cited in the bibliography apply.

ISO and IEC maintain terminological databases for use in standardization at the following addresses:

- IEC Electropedia: available at http://www.electropedia.org/
- ISO Online browsing platform: available at http://www.iso.org/obp

4 Personnel safety

The procedures and equipment described in this document can expose personnel to hazardous electrical conditions. Users of this document are responsible for selecting equipment that complies with applicable laws, regulatory codes and both external and internal policy. This document cannot replace or supersede any requirements for personnel safety.

Electrical hazard reduction practices should be exercised and proper grounding instructions for equipment should be followed.

AVA Documents
Document Sharing Hub

Full document details: PD IEC TR 61340-5-4:2019

5 Test equipment

5.1 Selection of test equipment

If the specifications for test equipment described in Clause 5 do not match the range of measurements required to be made in the ESD control program, other test equipment that does match the range should be used and documented in the ESD control program plan.

Test equipment should be used and calibrated according to the manufacturer's recommendations.

5.2 AC outlet analyzer (or mains socket tester)

This is a device that plugs into an AC outlet and gives an indication, typically using lights, that the outlet is correctly wired, or if a fault condition exists. For compliance verification testing, an AC outlet analyzer can be used to indicate the correct wiring of the equipment grounding conductor.

Please note that some AC outlet analyzers might not be able to differentiate ground (or earth) and neutral wire reversals, line and neutral wire reversals, and line and ground wire reversals, or determine if the impedance to ground of the equipment grounding conductor is within the organization's specification.

5.3 AC circuit tester (impedance meter)

The meter should be capable of measuring the impedance of the equipment grounding conductor from a receptacle (power outlet used for establishing the AC equipment ground) to the neutral bond at the main service equipment panel. The meter should also verify wiring orientation.

5.4 Charged plate monitor (CPM)

5.4.1 CPM requirements

A CPM has a plate that measures (150 ± 1) mm x (150 ± 1) mm with a minimum capacitance of 15 pF when it is mounted in the test fixture without electrical connections. The total capacitance of the test circuit, with plate, is (20 ± 2) pF. A CPM as described in IEC 61340-4-7 meets these requirements.

The electrostatic field meter or voltmeter should be capable of measuring voltage in such a way that, in the absence of ionization, the CPM plate voltage does not decay more than 10 % of the initial test voltage within five minutes. The response time should be less than 10 % of the shortest discharge time expected to be measured.

5.4.2 Portable verification kit

Portable verification kits for compliance verification of ionizers are commercially available and typically consist of four components: 1) electrostatic field meter or voltmeter, 2) CPM plate separated from a ground plate on insulating standoffs, 3) plate charger, and 4) ground plate. These four components may be integrated into a single instrument. A stopwatch or other timer is used to measure discharge times.

For convenient use in a portable kit, the CPM plate is typically smaller than that specified for a CPM.

A verification kit that has a capacitance or plate size that differs from the defined CPM plate may be used if the user develops a correlation factor for decay and offset voltage.

Documents
Document Sharing Hub

Full document details: PD IEC TR 61340-5-4:2019

The plate charger should be capable of charging the CPM plate to a voltage of each polarity in excess of the initial test voltage.

5.5 Concentric ring electrode assembly

The electrode assembly contains a central disc surrounded by a concentric ring made of conductive materials that make contact with the material under test.

The electrode assembly described in IEC 61340-2-3 meets the requirements for compliance verification testing.

NOTE See also ANSI/ESD STM11.11.

5.6 DC ohmmeter

The instrumentation specified in IEC 61340-2-3 for laboratory evaluations and acceptance testing have output voltages of (10,0 ± 0,5) V or (100,0 ± 5) V depending on the range of resistance being measured. Instrumentation meeting the requirements for laboratory evaluations or acceptance testing as specified in IEC 61340-2-3, or instrumentation meeting the following requirements should be used for compliance verification testing.

Compliance verification instrumentation should be capable of making measurements one order of magnitude above and one order of magnitude below the intended measurement range. The output voltage of compliance verification instrumentation may vary from laboratory evaluation or acceptance testing instrumentation, and may be rated under load or open circuit. Compliance verification instrumentation should be checked against laboratory evaluation or acceptance testing instrumentation to ensure there is correlation between measurement results.

A DC ohmmeter may be a single, self-contained instrument, or a combination of instruments (e.g. DC power supply, voltmeter and ammeter). If the DC ohmmeter has a self-switching test voltage, it should be ensured that the changeover meets the requirements specified in IEC 61340-2-3 or specified by the user.

5.7 Electrostatic field meter

The electrostatic field meter is an instrument used to measure the electric field that results from electrostatic charge on a material.

There are different types of electrostatic field meter in common use including induction probes and field mills. The relative merits of these types are discussed in IEC TR 61340-1.

5.8 Electrostatic voltmeter

The electrostatic voltmeter is an instrument used to measure the voltage that results from the static charge on a material. Electrostatic voltmeters may be non-contacting, based on field meters or induction probes, or contacting. IEC TR 61340-1 gives guidance on the use of different types of electrostatic voltmeters.

5.9 Foot electrode

The foot electrode is a conductive metal plate that is at least large enough to accommodate a person's foot, without the foot extending beyond any edge of the plate (typically 305 mm x 305 mm).

5.10 Hand-held electrode

The hand-held electrode is a stainless steel, brass or copper round or tubular stock, approximately 2,5 cm in diameter and 7,5 cm or greater in length, with a connector at one end. All dimensions are nominal.

AVA Documents
Document Sharing Hub

5.11 Resistance measurement electrode(s)

A resistance measurement electrode consists of a cylindrical electrode, (2,5 ± 0,25) kg with a diameter of (65 ± 5) mm having a contact of electrically conductive material with a Shore A hardness between 50 and 70. The resistance between two resistance measurement electrodes should be less than $1,0 \times 10^3$ Ω when measured at (10,0 ± 0,5) V on a metallic surface.

The electrode described in IEC 61340-2-3 meets these specifications.

Over time, conductive rubber materials used as the contact surface of the probes can warp. This could cause measurements to change. At this time there is no standardized method to verify if this has occurred but the user should be aware of this phenomenon.

NOTE Other electrodes can be used providing the results have been shown to be comparable.

5.12 Insulative support surface

A planar (flat) surface, when used for specimen support, should have a surface resistivity greater than $1,0 \times 10^{13}$ Ω when measured as per IEC 62631-3-2 or a surface resistance or point-to-point resistance greater than 1,0 x 10^{12} Ω when measured as per IEC 61340-2-3. The area of the insulative support surface should be large enough to completely isolate the largest specimen intended to be tested on it.

5.13 Integrated checker

An integrated checker is a purpose-built instrument that is used for measuring wrist strap or footwear resistance as worn.

An integrated checker for wrist straps should indicate fail for resistances above $3,5 \times 10^7$ Ω, or a user defined limit.

An integrated checker for footwear should indicate fail for resistance above $1,0 \times 10^8$ Ω, or a user defined limit.

5.14 Two-point probe

A two-point probe consists of an insulated metal body with a polytetrafluoroethylene (PTFE) insulator inserted into each end. One insulator holds test leads; the other holds receptacles that accept spring-loaded pins. The pins are gold plated and have a spring force of (4,6 ± 0,5) N. The pin tips are (3,2 ± 0,1) mm diameter electrically conductive rubber electrodes with Shore A hardness of 50 to 70. The resistance between the two resistance measurement electrodes should be less than $1,0 \times 10^3$ Ω when measured at (10,0 ± 0,5) V on a metallic surface.

The two-point probe described in IEC 61340-2-3 meets these specifications.

5.15 Surface resistance bar electrode

Concentric ring electrodes often cannot be applied because of the size and shape of materials. Insufficient contact area or contact material can also result in high resistance between the electrode and the specimen. If concentric ring electrodes result in errors, a user defined surface resistance bar electrode (SRB) may be used instead.

An SRB is an alternative electrode that is useful especially in measurements of hard, concave and convex surfaces. In addition, orientation of resistance can be evaluated with an SRB.

Documents
Document Sharing Hub

Full document details: PD IEC TR 61340-5-4:2019

When a user defined SRB is used, the following parameters should be mentioned in a test report: dimensions of the bars, contact force or mass of the electrode, contact material and distance between the bars. In addition, test voltage and electrification time should be recorded. If the result is expressed as surface resistance (R_s), the dimensions of the electrode are not taken into account. If the result is expressed as surface resistivity (ρ_s), the following equation should be used: $\rho_s = R_s \cdot (w/l)$, where w is the width of the electrode and l is the distance between electrodes.

For inhomogeneous materials, the resistance value can vary a lot on the same sample. The calculation of the resistivity assumes a homogeneous sample.

6 Grounding/bonding systems

6.1 Responsibility for checking systems

In many countries, national electrical codes or regulations require testing of grounding/bonding systems that include mains wiring systems to be carried out by qualified personnel.

If this is not the case in the facility then as a minimum the correct wiring should be checked as described below.

6.2 Objective

The objective of this compliance verification test procedure is to verify that the various grounding/bonding systems of an ESD protected area (e.g. ESD control workstation, see Figure 1) are within the resistance range allowed by the organization's specification. A properly configured ESD control workstation will have all ESD control work surfaces, fixtures, handling equipment and personnel grounding devices connected to a common ground point. The common ground point is connected to the ESD ground, which in most cases will be the equipment ground (protective earth). If a functional ground is used, it should be bonded to the electrical ground wherever possible (for information see IEC TR 61340-5-2).

6.3 Test equipment

See Clause 5 for general description of test equipment.

- DC ohmmeter.
- Two test leads of sufficient length.

Documents
Document Sharing Hub

Full document details: PD IEC TR 61340-5-4:2019

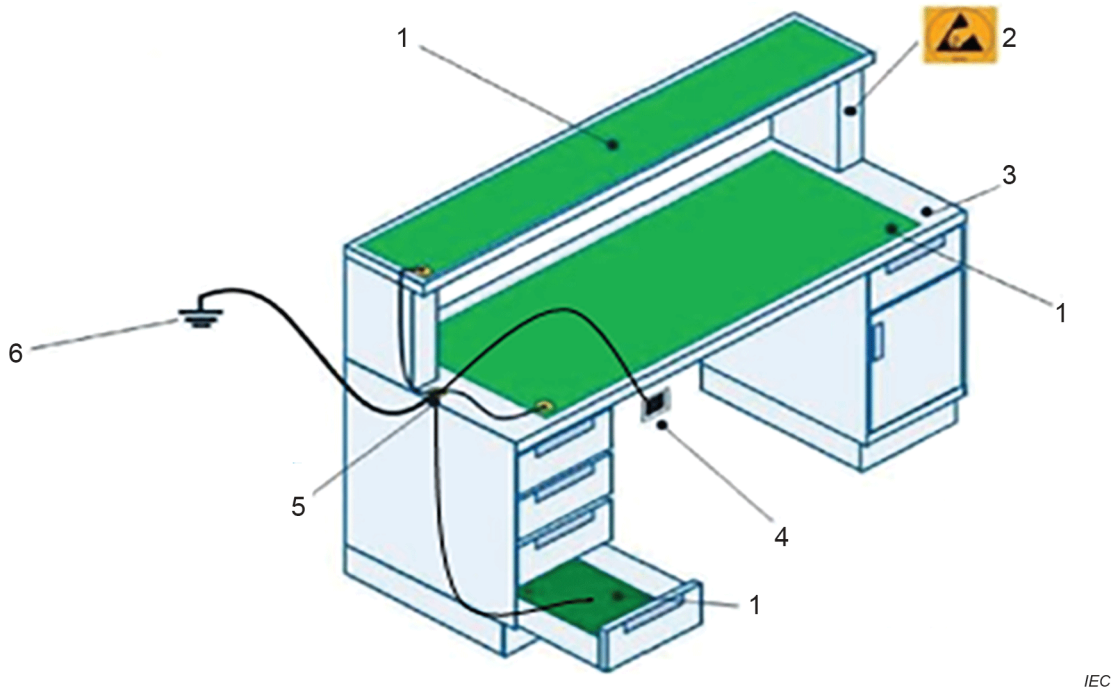

Key

1 ESD control work surface (mat)

2 ESD control symbol

3 ESD control work surface

4 wrist strap bonding point

5 common ground point

6 equipment ground

Figure 1 – ESD control workstation

6.4 Test procedure for wrist strap bonding points

- Operate the DC ohmmeter according to the manufacturer's instructions.
- Connect two test leads to the DC ohmmeter.
- Connect or place one test lead to the wrist strap bonding point (personnel ground) and the other test lead to the ground reference.
- Measure the resistance according to the instruction of the DC ohmmeter and note the result.

6.5 Troubleshooting wrist strap bonding point failures

- Visually and mechanically confirm that all termination hardware and grounding wires are not inadvertently loose, broken, or disconnected.
- Verify the test equipment is operating properly and check/service the battery (if battery operated) following the manufacturer’s operating instructions for proper operation.
- Test the resistance of the wrist strap bonding point to the common ground point.
- Test the resistance of the common ground point to the ESD ground.

If the measured resistance is outside the specified range, connections between the wrist strap bonding point and common ground point, and/or the common ground point and ESD ground should be replaced and the resistance re-measured.

If the measured resistance is still outside the specified range, the workstation should be taken out of service and clearly marked as such.

AVA Documents
Document Sharing Hub

7 Work surfaces

7.1 Basis of test procedure

This compliance verification test procedure is based on the following publication(s):

- IEC 61340-2-3;
- ANSI/ESD S6.1.

7.2 Objective

The objective of this test procedure is to verify that the ESD control work surface (a table mat or a bare table) is electrically bonded to the ground reference and is within the minimum and maximum resistance allowed by the user's specification.

This test procedure can also be used for the measurement of shelves, drawers and other grounded ESD control storage equipment surfaces.

7.3 Test equipment

See Clause 5 for general description of test equipment.

- one resistance measurement electrode;
- two test leads of sufficient length;
- DC ohmmeter.

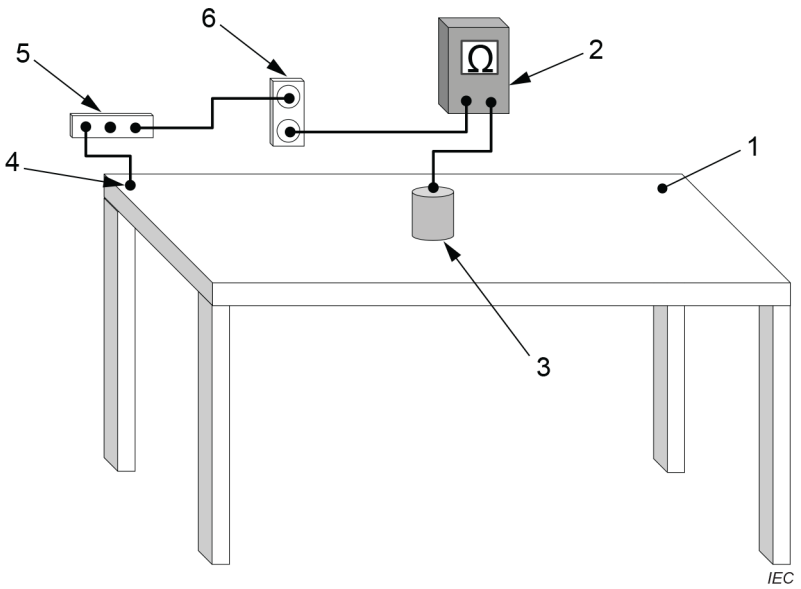

Key

1 ESD control work surface

2 DC ohmmeter

3 resistance measurement electrode

4 groundable point

5 common ground point

6 equipment ground

Figure 2 – ESD control work surface test

NOTE Connection to the equipment ground is made using a connector or adaptor approved by national electrical codes and regulations.

AVA Documents
Document Sharing Hub

7.4 Test procedure

- Do not clean the test surface before the verification.
- Remove all ESD sensitive items from the surface under test. All other items should be left in place on the surface. All ground connections (including equipment ground connections) should remain connected as the surface under test is being verified.
- Connect one end of a test lead to the resistance measurement electrode, and the other end to the test instrument. See Figure 2.
- Connect one end of the second test lead also to the test instrument, and the other end of the second test lead to the ground reference.
- Place the resistance measurement electrode on the surface under test.
- If a DC ohmmeter with a single test voltage or automatic switching test voltage is used, make a measurement and record the resistance.
- If a DC ohmmeter with 10 V and 100 V manually switched test voltages is used, apply 10 V and wait for the meter to stabilize or for 15 s. If the indicated resistance is less than $1{,}0 \times 10^6$ Ω, note the resistance. If the indicated resistance is equal to or greater than $1{,}0 \times 10^6$ Ω, switch the meter to 100 V and retest. Note the resistance after the meter stabilizes or after 15 s.
- Switching the test voltage to 100 V can result in a resistance reading of less than $1{,}0 \times 10^6$ Ω. When this occurs the reading made with the 100 V test voltage is used.
- If the resistance is known to be equal to or greater than $1{,}0 \times 10^6$ Ω the measurement with 10 V may be omitted.

Tests should include those surface areas that are subject to wear or are visibly dirty.

If measurement results are outside the specified range, record this as a failure and continue to troubleshooting. Also if cleaning resolves the issue, this is still considered a failure and periodic cleaning need to be considered or changed.

7.5 Troubleshooting

7.5.1 Visual/mechanical check

- Visually and mechanically confirm that all termination hardware and grounding wires are not loose, broken, or disconnected.
- Examine the surface to ensure it is not soiled or worn, which could cause increased surface resistance. If soiled, clean the surface with an approved cleaner. Ensure the surface is completely dry before retesting. If the measured resistance is within acceptable limits after cleaning, cleaning procedures should be reviewed and changed as appropriate. Periodic cleaning is recommended to maintain proper electrical function of all ESD control surfaces.
- When checking ESD control work surface mats:
  - Check the connection of the mat connector to the mat.
  - Check the connection of the ground cord to the mat connector.
  - Check the connection of the common ground point to the ground cord.
  - Check the connection of the equipment ground to the common ground point.

7.5.2 Electrical test

- Verify that the test equipment is operating properly and check/service the battery (if battery operated) following the manufacturer's operating instructions for proper operation.
- Examine the resistance measurement electrode contact surface for dirt build-up. Remove surface contamination by following the manufacturer's recommendations. If using liquids to clean the electrode, allow the electrode to dry before retesting.

Documents
Document Sharing Hub

Full document details: PD IEC TR 61340-5-4:2019

- With a DC ohmmeter, test the resistance of the surface to the groundable point. Over time the mechanical connection between the groundable point and the mat might become loose. Ensure that there is a good connection between the groundable point and the mat surface. With a DC ohmmeter, test the resistance of the groundable point to the common ground point.
- With a DC ohmmeter, test the resistance of the common ground point to the equipment ground.
- Ensure the surface material has not deteriorated. To determine this condition, the resistance between two locations on the top of the surface (point-to-point) can be performed using a DC ohmmeter and two resistance measurement electrodes with test leads. See Figure 3.

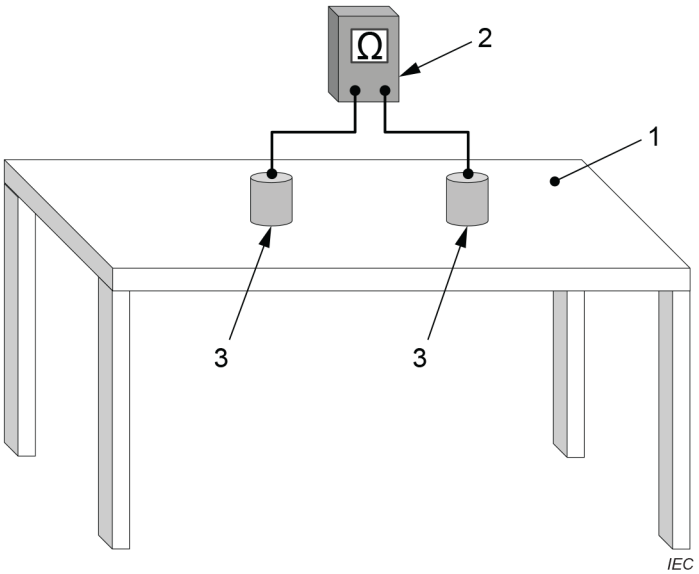

Key

1 ESD control work surface

2 DC ohmmeter

3 resistance measurement electrode

Figure 3 – Point-to-point measurement setup

Defective ESD control items that cannot be brought into compliance should be taken out of service.

8 Wrist strap system

8.1 Basis of test procedure

This compliance verification test procedure is based in part on IEC 61340-4-6.

8.2 Objective

The objective of this compliance verification test procedure is to verify that the total series resistance of all of the elements in the wrist strap system is within the minimum and maximum resistance allowed by the user's specification.

Documents
Document Sharing Hub
Full document details: PD IEC TR 61340-5-4:2019

8.3 Test equipment

See Clause 5 for general description of test equipment.

- integrated checker for wrist straps, or DC ohmmeter;
- hand-held electrode;
- one test lead of sufficient length.

8.4 Test procedure

8.4.1 Testing with integrated checker

- Place the band on the user's wrist, attach the ground cord to the band and attach the other end of the ground cord to the integrated checker.
- Touch the contact area on the integrated checker with the fingers on the hand closest to the band and activate the integrated checker following the manufacturer's instructions.
- Record the resistance or the "pass" or "fail" indication (see Figure 4).

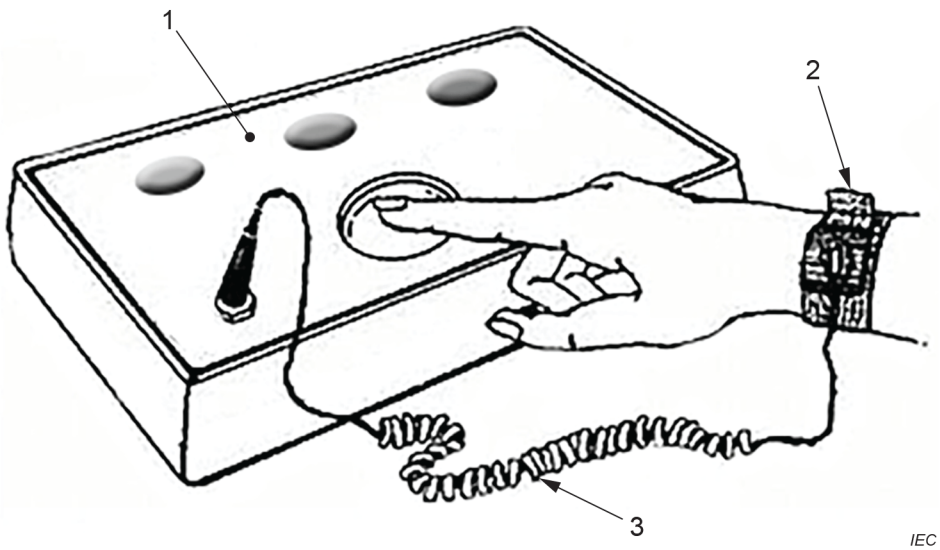

Key

1 integrated checker

2 band

3 ground cord

Figure 4 – Wrist strap test using integrated checker

8.4.2 Testing with DC ohmmeter

- Place the wristband with personal ground cord attached on the user's wrist as per the organization's procedure. Adjust the wristband if necessary to ensure a snug fit.
- Attach the ground cord to the common terminal (-) of the meter.
- Connect one end of the test lead to the hand-held electrode and connect the other end of the test lead to the positive terminal (+) of the meter.
- Hold the hand-held electrode with the hand on which the wrist strap is being worn. See Figure 5.
- Apply 10 V and wait for the meter to stabilize or for 15 s. If the indicated resistance is less than $1{,}0 \times 10^6$ Ω, note the resistance. If the indicated resistance is equal to or greater than $1{,}0 \times 10^6$ Ω, switch the meter to 100 V and retest.
- Measure and record the resistance of the wristband and ground cord system.

Documents
Document Sharing Hub

- When using a cloth wristband, it is recommended to periodically test the fabric. This can be performed by separating the buckle from the skin while the wristband is on the wrist, or by removing the wristband from the wrist and pinching the cloth between the thumb and forefinger.

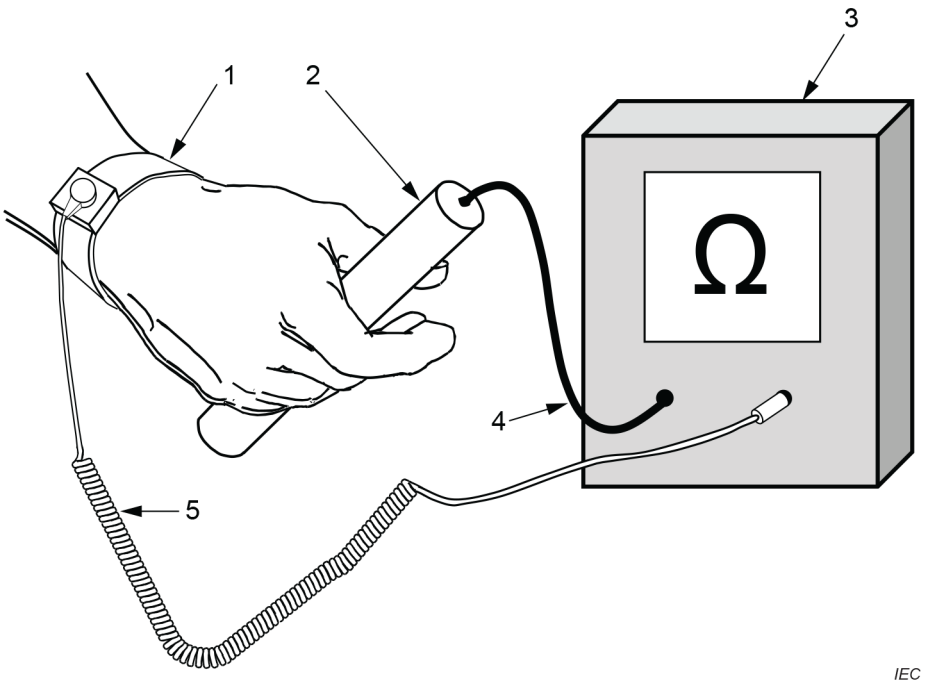

Key

1 band

2 hand-held electrode

3 DC ohmmeter

4 test lead

5 ground cord

Figure 5 – Wrist strap test using DC ohmmeter

8.5 Troubleshooting

- Verify that the test equipment is operating properly, check/service the battery (if battery operated) following the manufacturer's operating instructions for proper operation.
- Examine the wristband to ensure that it is correctly sized and adjusted snugly to the skin.
- Examine the wristband to ensure it is not soiled.
- Replace the wristband with a new wristband and repeat the test procedure.
- Replace the ground cord with a new ground cord and repeat the test procedure.
- If the steps above are not effective, the person's skin might have a high electrical resistance. Changes in weather can affect the person's skin contact resistance. Some wristbands have a propensity to trap moisture underneath the wristband and can be more effective for people with dry skin. The use of a skin lotion or gel compatible with process requirements might reduce the person's skin contact resistance. If skin lotions and gels are used, more frequent testing during the work shift might be required to ensure their continued effectiveness.

Defective ESD control items that cannot be brought into compliance should be taken out of service.

Documents
Document Sharing Hub
Full document details: PD IEC TR 61340-5-4:2019

9 Person-footwear system

9.1 Basis of test procedure

This compliance verification test procedure is based on the following publication:

- IEC 61340-5-1.

9.2 Objective

The objective of this compliance verification test procedure is to verify that the resistance of the footwear system (person and footwear only) is within the minimum and maximum resistance allowed by the user's specification. Footwear might consist of shoes, foot grounders or booties.

9.3 Test equipment

See Clause 5 for general description of test equipment.

- integrated checker for footwear, or DC ohmmeter;
- foot electrode;
- hand-held electrode;
- two test leads of sufficient length.

9.4 Test procedure

9.4.1 Testing with integrated checker

- Place the ESD footwear on feet as per the organization's procedure.
- Place one foot on the integrated checker's foot electrode ensuring the other foot is not in contact with the foot electrode or adjacent ESD control flooring.
- Touch the contact area on the integrated checker and activate the integrated checker following the manufacturer's instructions. See Figure 6 a). Record the resistance or the "pass" or "fail" indication.
- Repeat for other foot.

NOTE Some integrated checkers that have dual-foot electrodes can do this measurement automatically.

9.4.2 Testing with DC ohmmeter

- Place the ESD control footwear on feet as per the organization's procedure.
- Connect one end of the first test lead to the hand-held electrode, and the other end of the first test lead to the positive terminal (+) of the DC ohmmeter.
- Connect one end of the second test lead to the common terminal (-) of the DC ohmeter, and the other end of the second test lead to the foot electrode.
- Hold the hand-held electrode with either hand.
- Place one foot on the foot electrode ensuring the other foot is not in contact with the foot electrode or adjacent ESD control flooring. See Figure 6 b).
- Apply 10 V and wait for the meter to stabilize or for 15 s. If the indicated resistance is less than $1{,}0 \times 10^6$ Ω, note the resistance. If the indicated resistance is equal to or greater than $1{,}0 \times 10^6$ Ω, switch the meter to 100 V and retest. Repeat for the other foot.
- Switching the test voltage to 100 V might result in a resistance reading of less than $1{,}0 \times 10^6$ Ω. When this occurs the reading made with the 100 V test voltage is used.

Documents
Document Sharing Hub
Full document details: PD IEC TR 61340-5-4:2019

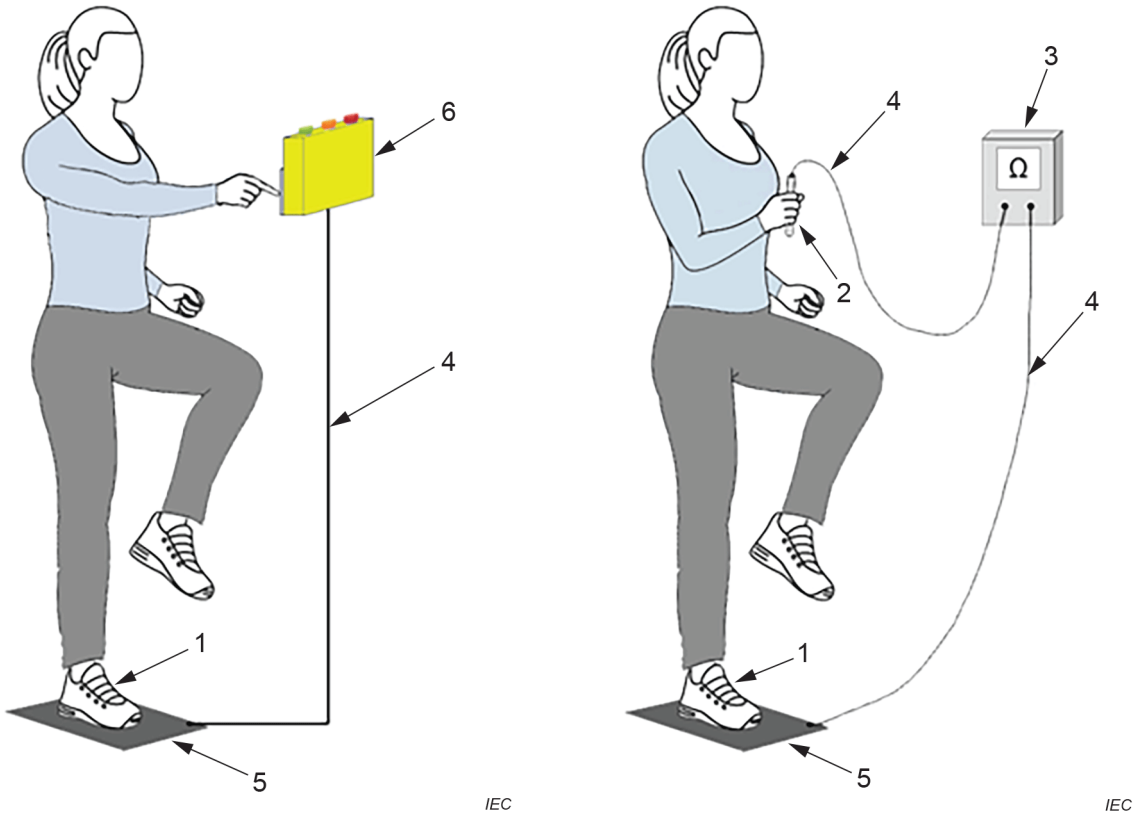

a) Test using integrated checker **b) Test using DC ohmmeter**

Key

1 ESD control footwear

2 hand-held electrode

3 DC ohmmeter

4 test lead

5 foot electrode

6 integrated checker for footwear

Figure 6 – ESD control footwear test

9.5 Troubleshooting

- Verify that the test equipment is operating properly and check/service the battery (if battery operated) following the manufacturer's operating instructions for proper operation.
- Ensure ESD control footwear is worn properly.
- Examine the ESD control footwear to ensure that its sole is not soiled or damaged, which could add resistance to the ESD control footwear system. If necessary, clean the ESD control footwear with an approved cleaner and allow the ESD control footwear to dry before retesting.
- Changes in weather and dryness of shoes can affect the person's skin contact resistance. People who have dry skin often take time to build up sufficient moisture in the footwear to make good contact. The use of a skin lotion or gel, compatible with process requirements, might reduce the person's skin contact resistance.
- If necessary, replace the ESD control footwear and repeat the procedure.

Defective ESD control items that cannot be brought into compliance should be taken out of service.

Documents
Document Sharing Hub
Full document details: PD IEC TR 61340-5-4:2019