PD IEC/TR 61850-7-510:2012

BSI Standards Publication

Communication networks and systems for power utility automation

Part 7-510: Basic communication structure — Hydroelectric power plants – Modelling concepts and guidelines

NO COPYING WITHOUT BSI PERMISSION EXCEPT AS PERMITTED BY COPYRIGHT LAW

raising standards worldwide™

Full document details: PD IEC/TR 61850-7-510:2012

National foreword

This Published Document is the UK implementation of IEC/TR 61850-7-510:2012.

The UK participation in its preparation was entrusted to Technical Committee PEL/57, Power systems management and associated information exchange.

A list of organizations represented on this committee can be obtained on request to its secretary.

This publication does not purport to include all the necessary provisions of a contract. Users are responsible for its correct application.

© The British Standards Institution 2012

Published by BSI Standards Limited 2012

ISBN 978 0 580 75808 9

ICS 33.200

Compliance with a British Standard cannot confer immunity from legal obligations.

This Published Document was published under the authority of the Standards Policy and Strategy Committee on 30 April 2012.

Amendments issued since publication

Amd. No.	Date	Text affected

Documents
Document Sharing Hub

Full document details: PD IEC/TR 61850-7-510:2012

IEC/TR 61850-7-510

Edition 1.0 2012-03

TECHNICAL REPORT

colour inside

Communication networks and systems for power utility automation – Part 7-510: Basic communication structure – Hydroelectric power plants – Modelling concepts and guidelines

INTERNATIONAL ELECTROTECHNICAL COMMISSION

PRICE CODE XC

ICS 33.200

ISBN 978-2-88912-007-9

Warning! Make sure that you obtained this publication from an authorized distributor.

® Registered trademark of the International Electrotechnical Commission

Documents
Document Sharing Hub

Full document details: PD IEC/TR 61850-7-510:2012

CONTENTS

FOREWORD 6
INTRODUCTION 8
1 Scope 9
2 Normative references 9
3 Overall communication structure in a hydropower plant 10
3.1 Abstract communication structure 10
3.2 Communication network 10
3.3 Operational modes 12
3.4 Fundamental control strategies 13
3.5 Hydro power plant specific information 14
4 Structuring control systems 16
4.1 Basic use of logical nodes 16
4.2 Logical device modelling 16
4.3 Example of application for an excitation system 19
4.3.1 General 19
4.3.2 Voltage regulation example 22
4.3.3 PSS example 24
4.4 Example of application for a turbine governor system 25
4.4.1 Conditions of this example 25
4.4.2 Signal hierarchy 25
4.4.3 Basic overview 26
4.4.4 Detailed description of used structure 28
4.5 Examples of how to reference a start / stop sequencer of a unit 34
4.5.1 General 34
4.5.2 Unit sequences definition with IEC 61850 34
4.5.3 Start sequence from a state “stopped” to a state "speed no load not excited” (included in LD named “SEQ_SnlNexStr”) 35
4.5.4 Start sequence from state “speed no load not excited” to state “generation” (included in LD named “SEQ_SnlExcStr” and “SEQ_GenStr”) 37
4.5.5 Stop sequence from state “generator” to state “speed no load not excited” (included in LD named “SEQ_GridFaultStop”) 38
4.5.6 Shutdown sequence from state “generator” to state “stopped” (SEQ_NormalStop) 40
4.5.7 Quick shutdown sequence from state “generator” to state “stopped” (SEQ_QuickStop) 42
4.5.8 Emergency shutdown sequence from state “generator” to state “stopped” (SEQ_EmgStop) 45
5 Variable speed system example 47
5.1 Example of block diagrams and logical nodes of variable speed pumped storage system 47
5.2 Example of application for an excitation system of variable speed pumped storage 49
5.2.1 General 49
5.2.2 Automatic power regulator example 49

AVA Documents
Document Sharing Hub
Full document details: PD IEC/TR 61850-7-510:2012

5.2.3 Power detector example 50
5.2.4 Gate pulse generator example 50
5.3 Example of governor system 51
5.3.1 Guide vane opening function example 51
5.3.2 Guide vane controller example 52
5.3.3 Speed controller example 53
5.3.4 Optimum speed function example 53
5.4 Example of how to reference a start / stop sequencer for variable speed pumped storage system 54
5.4.1 Unit sequences definition for conventional and variable speed pumped storage 54
5.4.2 Start sequence from a state "Stopped" to a state "Synchronous Condenser (SC) mode in pump direction" 55
5.4.3 Start sequence from a state "Synchronous Condenser (SC) mode in Pump direction" to a state "Pumping" 56
5.4.4 Mode Transition sequence from a state "Pumping" to a state "Synchronous Condenser (SC) mode in Pump direction" 57
5.4.5 Sequence from a state "pumping" to a state "stopped" 58
5.4.6 Emergency shutdown sequence from a state "pumping" to a state "stopped" 60
5.4.7 Shutdown sequence from a state "Synchronous Condenser (SC) mode in pump direction" to a state "stopped" 61
5.4.8 Emergency shutdown sequence from a state "Synchronous Condenser (SC) mode in pump direction" to a state "stopped" 62
6 Pump start priorities of a high pressure oil system 64
6.1 Example of a pump start priority for high pressure oil system 64
6.1.1 General 64
6.1.2 Sequence to manage a pump start priorities 64
6.1.3 Sequence to manage a pump 67
7 Addressing structures, examples of mapping 68
7.1 Basic principles (IEC 61850-6) 68
7.2 Decentralised ICD file management 68
7.3 Centralised ICD file management 69
7.4 Power plant structure – ISO/TS 16952-10 (Reference Designation System – Power Plants) 70
7.4.1 ISO/TS 16952-10 (Reference Designation System – Power Plants) 70
7.4.2 Example 1: Wicket gate indications 73
7.4.3 Example 2: 3 Phase Measurement 74
7.4.4 Example 3: Speed Controller 74
7.4.5 Example 4: Speed measurement with some thresholds 75
7.4.6 Example 5: Common turbine information 76
8 Examples of how to use various types of curves and curve shape descriptions 76
9 Examples of voltage matching function 80
Bibliography 82

Figure 1 – Structure of a hydropower plant 10
Figure 2 – Simplified network of a hydropower plant 12
Figure 3 – Principles for the joint control function 14
Figure 4 – Water flow control of a turbine 15

AVA Documents
Document Sharing Hub
Full document details: PD IEC/TR 61850-7-510:2012

Figure 5 – Pressurised oil systems with LD suffix and with LN prefix 18
Figure 6 – Examples of logical nodes used in an excitation system 19
Figure 7 – Example of logical devices of the regulation part of an excitation system 21
Figure 8 – AVR basic regulator 22
Figure 9 – Superimposed regulators, power factor regulator 22
Figure 10 – Superimposed regulators, over-excitation limiter 23
Figure 11 – Superimposed regulators, under-excitation limiter 23
Figure 12 – Superimposed regulators, follow up 24
Figure 13 – Power system stabilizer function 24
Figure 14 – Signal hierarchy 25
Figure 15 – Use of Logical Node HGOV 27
Figure 16 – Governor control 29
Figure 17 – Flow control 30
Figure 18 – Level control 31
Figure 19 – Speed control 32
Figure 20 – Limitations 33
Figure 21 – Actuator control 33
Figure 22 – Sequencer overview 34
Figure 23 – Typical block diagram in pumping operation 47
Figure 24 – Typical block diagram in generating operation 48
Figure 25 – Typical block diagram in synchronous condenser mode 48
Figure 26 – Automatic power regulator 49
Figure 27 – Power detector 50
Figure 28 – Gate pulse generator 50
Figure 29 – Guide vane opening function 51
Figure 30 – Guide vane controller 52
Figure 31 – Speed controller 53
Figure 32 – Optimum speed function 53
Figure 33 – Sequencer overview 54
Figure 34 – Graphical representation of the high pressure oil pumping unit 64
Figure 35 – Example of pump priority start logic sequence 66
Figure 36 – Example of pump start logic sequence 68
Figure 37 – Exchange of ICD files between system configurators 69
Figure 38 – Static Data exchange with vendor's configuration tool 70
Figure 39 – Tree structure of a system using RDS-PP 72
Figure 40 – Hydraulic correlation curve 77
Figure 41 – Turbine correlation curve 80
Figure 42 – Example of traditional voltage adjusting pulses 80
Figure 43 – Example of mapping of the pulse time in IEC 61850 80
Figure 44 – Example of an IEC 61850 voltage adjusting command 81

Table 1 – IED within a simplified single unit power plant 11
Table 2 – Recommended LN prefixes 16

AVA Documents
Document Sharing Hub

Table 3 – Logical device structure 20
Table 4 – Logical device names for functions 26
Table 5 – Typical sequences 35
Table 6 – Logical device names for sequence function groups 54
Table 7 – RDS-PP designation codes for Hydropower use 71

Documents
Document Sharing Hub
Full document details: PD IEC/TR 61850-7-510:2012

INTERNATIONAL ELECTROTECHNICAL COMMISSION

COMMUNICATION NETWORKS AND SYSTEMS FOR POWER UTILITY AUTOMATION –

Part 7-510: Basic communication structure – Hydroelectric power plants – Modelling concepts and guidelines

FOREWORD

1) The International Electrotechnical Commission (IEC) is a worldwide organization for standardization comprising all national electrotechnical committees (IEC National Committees). The object of IEC is to promote international co-operation on all questions concerning standardization in the electrical and electronic fields. To this end and in addition to other activities, IEC publishes International Standards, Technical Specifications, Technical Reports, Publicly Available Specifications (PAS) and Guides (hereafter referred to as "IEC Publication(s)"). Their preparation is entrusted to technical committees; any IEC National Committee interested in the subject dealt with may participate in this preparatory work. International, governmental and non-governmental organizations liaising with the IEC also participate in this preparation. IEC collaborates closely with the International Organization for Standardization (ISO) in accordance with conditions determined by agreement between the two organizations.

2) The formal decisions or agreements of IEC on technical matters express, as nearly as possible, an international consensus of opinion on the relevant subjects since each technical committee has representation from all interested IEC National Committees.

3) IEC Publications have the form of recommendations for international use and are accepted by IEC National Committees in that sense. While all reasonable efforts are made to ensure that the technical content of IEC Publications is accurate, IEC cannot be held responsible for the way in which they are used or for any misinterpretation by any end user.

4) In order to promote international uniformity, IEC National Committees undertake to apply IEC Publications transparently to the maximum extent possible in their national and regional publications. Any divergence between any IEC Publication and the corresponding national or regional publication shall be clearly indicated in the latter.

5) IEC itself does not provide any attestation of conformity. Independent certification bodies provide conformity assessment services and, in some areas, access to IEC marks of conformity. IEC is not responsible for any services carried out by independent certification bodies.

6) All users should ensure that they have the latest edition of this publication.

7) No liability shall attach to IEC or its directors, employees, servants or agents including individual experts and members of its technical committees and IEC National Committees for any personal injury, property damage or other damage of any nature whatsoever, whether direct or indirect, or for costs (including legal fees) and expenses arising out of the publication, use of, or reliance upon, this IEC Publication or any other IEC Publications.

8) Attention is drawn to the Normative references cited in this publication. Use of the referenced publications is indispensable for the correct application of this publication.

9) Attention is drawn to the possibility that some of the elements of this IEC Publication may be the subject of patent rights. IEC shall not be held responsible for identifying any or all such patent rights.

The main task of IEC technical committees is to prepare International Standards. However, a technical committee may propose the publication of a technical report when it has collected data of a different kind from that which is normally published as an International Standard, for example "state of the art".

IEC 61850-7-510, which is a technical report, has been prepared by IEC technical committee 57: Power systems management and associated information exchange.

Documents
Document Sharing Hub

Full document details: PD IEC/TR 61850-7-510:2012

The text of this technical report is based on the following documents:

Enquiry draft	Report on voting
57/1143/DTR	57/1203/RVC

Full information on the voting for the approval of this technical report can be found in the report on voting indicated in the above table.

This publication has been drafted in accordance with the ISO/IEC Directives, Part 2.

A list of all parts of the IEC 61850 series, under the general title: *Communication networks and systems for power utility automation*, can be found on the IEC website.

The committee has decided that the contents of this publication will remain unchanged until the stability date indicated on the IEC web site under "http://webstore.iec.ch" in the data related to the specific publication. At this date, the publication will be

- reconfirmed,
- withdrawn,
- replaced by a revised edition, or
- amended.

IMPORTANT – The 'colour inside' logo on the cover page of this publication indicates that it contains colours which are considered to be useful for the correct understanding of its contents. Users should therefore print this document using a colour printer.

A bilingual version of this technical report may be issued at a later date.

Documents
Document Sharing Hub

Full document details: PD IEC/TR 61850-7-510:2012

INTRODUCTION

This Technical Report is connected with IEC 61850-7-410, as well as IEC 61850-7-4:2010, explaining how the control system and other functions in a hydropower plant can use logical nodes and information exchange services within the complete IEC 61850 package to specify the information needed and generated by, and exchanged between functions.

The dynamic exchange of values by using polling, GOOSE, Reporting or Sampled Values is beyond the scope of this report. This data flow is specified in the engineering work flow defined in IEC 61850-5; this part of IEC 61850 applies also to applications in hydro power plants.

Documents
Document Sharing Hub
Full document details: PD IEC/TR 61850-7-510:2012

COMMUNICATION NETWORKS AND SYSTEMS FOR POWER UTILITY AUTOMATION –

Part 7-510: Basic communication structure – Hydroelectric power plants – Modelling concepts and guidelines

1 Scope

This part of IEC 61850 is intended to provide explanations on how to use the Logical Nodes defined in IEC 61850-7-410 as well as other documents in the IEC 61850 series to model complex control functions in power plants, including variable speed pumped storage power plants.

IEC 61850-7-410 introduced the general modelling concepts of IEC 61850 to hydroelectric power plants. It is however not obvious from the standard how the modelling concepts can be implemented in actual power plants.

2 Normative references

The following documents, in whole or in part, are normatively referenced in this document and are indispensable for its application. For dated references, only the edition cited applies. For undated references, the latest edition of the referenced document (including any amendments) applies.

IEC 60870-5-104, *Telecontrol equipment and systems – Part 5-104: Transmission protocols – Network access for IEC 60870-5-101 using standard transport profiles*

IEC 61850-5:2003, *Communication networks and systems in substations – Part 5: Communication requirements for functions and device models*

IEC 61850-6, *Communication networks and systems for power utility automation – Part 6: Configuration description language for communication in electrical substations related to IEDs*

IEC 61850-7-2, *Communication networks and systems for power utility automation – Part 7-2: Basic information and communication structure – Abstract communication service interface (ACSI)*

IEC 61850-7-3, *Communication networks and systems for power utility automation – Part 7-3: Basic communication structure – Common data classes*

IEC 61850-7-4:2010, *Communication networks and systems for power utility automation – Part 7-4: Basic communication structure – Compatible logical node classes and data object classes*

IEC 61850-7-410, *Communication networks and systems for power utility automation – Part 7-410: Hydroelectric power plants – Communication for monitoring and control*

IEC 61850-8-1, *Communication networks and systems for power utility automation – Part 8-1: Specific communication service mapping (SCSM) – Mappings to MMS (ISO 9506-1 and ISO 9506-2) and to ISO/IEC 8802-3*

Documents
Document Sharing Hub
Full document details: PD IEC/TR 61850-7-510:2012

IEC 61850-9-2, *Communication networks and systems for power utility automation – Part 9-2: Specific communication service mapping (SCSM) – Sampled values over ISO/IEC 8802-3*

ISO/TS 16952-10, *Technical product documentation – Reference designation system – Part 10: Power plants*

3 Overall communication structure in a hydropower plant

3.1 Abstract communication structure

Figure 1 is based on the substation structure described in IEC 61850-6. A typical power plant will include a "substation" part that will be identical to what is described in the IEC 61850 series. The generating units with their related equipment are added to the basic structure.

A generating unit consists of a turbine-generator set with auxiliary equipment and supporting functions. Generator transformers can be referenced as normal substation transformers; there is not always any one-to-one connection between generating units and transformers.

The dam is a different case. There is always at least one dam associated with a hydropower plant. There are however reservoirs that are not related to any specific power plant, equally there are power plants from which more than one dam is being controlled. There can also be dams with more than one hydropower plant. While all other objects can be addressed through a specific power plant, dams might have to be addressed directly.

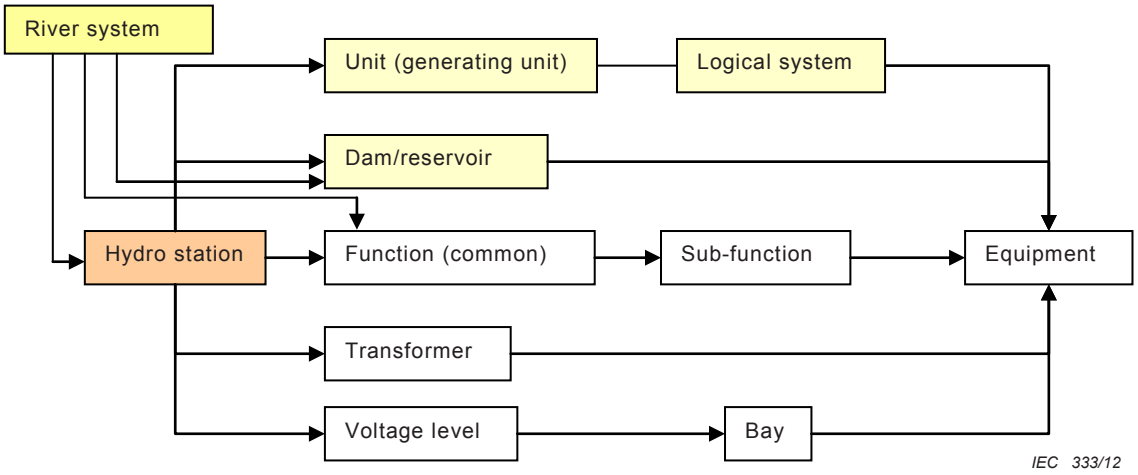

Figure 1 – Structure of a hydropower plant

There is however no standardised way of arranging overall control functions, the structure will depend on whether the plant is manned or remote operated, as well as traditions within the utility that owns the plant. In order to cover most arrangements, some of the Logical Nodes defined in this document are more or less overlapping. This will allow the user to arrange Logical Devices by selecting the most appropriate Logical Nodes that suits the actual design and methods of operation of the plant. Other Logical Nodes are very small, in order to provide simple building blocks that will allow as much freedom as possible in arranging the control system.

3.2 Communication network

Defining a station communication network is one of the primary steps for defining how the logical devices will be distributed among IEDs. The decision of where to nest the logical device is relative to the physical connection of an IED and the field instrumentation. Table 1 lists an example of physical devices used for control of a small hydropower plant.

Documents
Document Sharing Hub
Full document details: PD IEC/TR 61850-7-510:2012

Table 1 – IED within a simplified single unit power plant

Intelligent electronic device	Description	Example of types of logical Devices nested in an IED
IED1	Intake valve controller	Valve {A, B}
IED2	Turbine controller and speed governor	Actuators, Controllers, Turbine information
IED3	High pressure oil system controller	Tank, Pump A, Pump B
IED4	Generator monitoring system	Phase Windings{A,B,C}, Eccentricity
IED5	Excitation system	Logical device group reference: Regulation, Controls, Field Breaker, Protection
IED6	Bearing monitoring system	Thrust bearing, guide bearing, and generator bearing
IED7	Dam monitoring system	Spillway gate{1,2} and dam
Unit IED	Unit acquisition and control	Logical device group reference: sequences and Alarm grouping
Common IED	Remote terminal unit	Nil
Merging unit 1	Current- and voltage measurements at generator	Merging Unit
Merging unit 2	Current- and voltage measurements in MV	Merging Unit
Merging unit 3	Current- and voltage measurements in HV	Merging Unit
PROT1 T	Primary transformer protection	Protection, measurement
PROT2 T	Secondary transformer protection	Protection, measurement
PROT1 G	Primary generator protection	Protection, measurement
PROT2 G	Secondary generator protection	Protection, measurement

The following example in Figure 2 shows a simplified network of a single unit power plant. The IEDs exchange information and control commands using MMS (IEC 61850-8-1), send trip commands via GOOSE messaging (IEC 61850-9-2) and get information instantaneous current and voltage reading via sample value (IEC 61850-9-2). The logical devices are distributed among IEDs along functional groupings. The information is pushed to the dispatch centre via a data concentrator which is the remote terminal unit using IEC 60870-5-104.

Documents
Document Sharing Hub
Full document details: PD IEC/TR 61850-7-510:2012

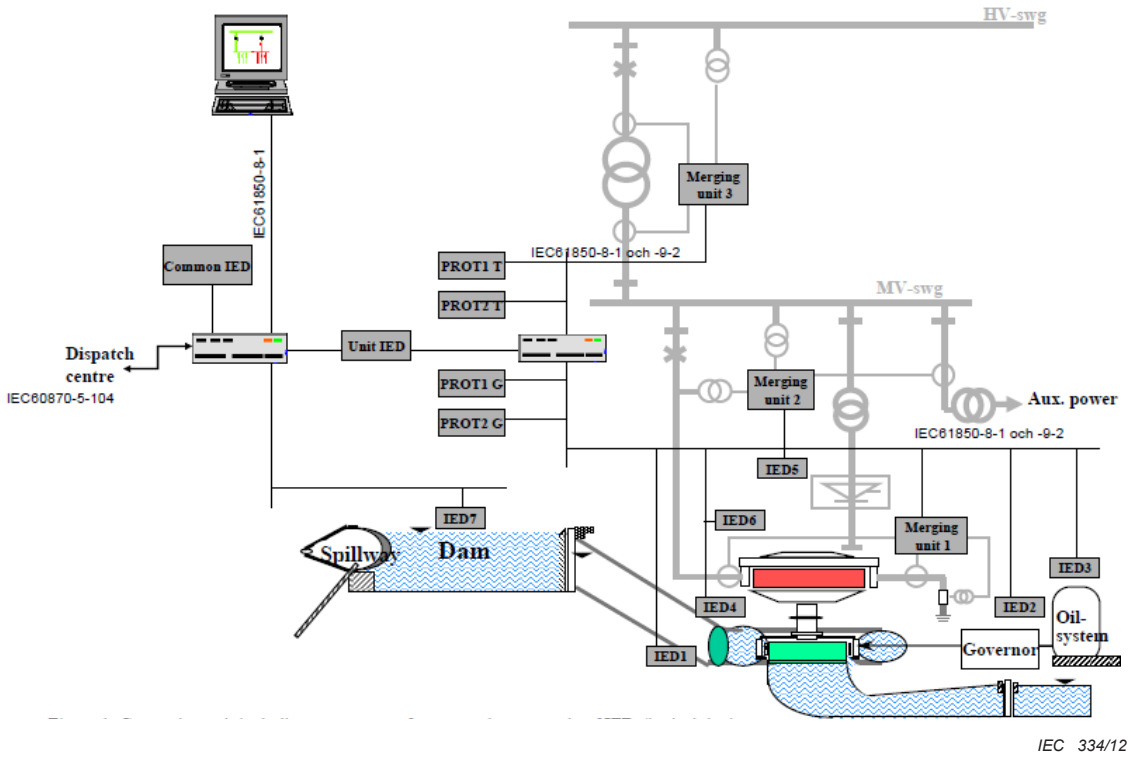

Figure 2 – Simplified network of a hydropower plant

3.3 Operational modes

A power plant can be operated in different modes: active power production mode or condenser mode. The generator can be used as a pure synchronous condenser, without any active power production and with the runner spinning in air.

In a pumped storage plant, there is a motor mode for the generator. A generator in a pumped storage plant can also be used for voltage control in a synchronous condenser mode, in this case normally with an empty turbine chamber.

The following steady states are defined for the unit:

Stopped – Unit is at standstill

Speed no load, not excited – No field current is applied, no voltage is generated; the generator is running at rated speed but not connected to any external load.

Speed no load, excited – Field current is applied and a voltage is generated, the generator is however not connected to any external load, there is no significant stator current.

Synchronised – The generator is synchronised to an external network. This is the normal status of an operating generator.

Synchronised in condenser mode – The generator is synchronised. However it does not primarily produce active power. In condenser mode, it will produce or consume reactive power.

Island operation mode – The external network has been separated and the power plant shall control the frequency.

Documents
Document Sharing Hub
Full document details: PD IEC/TR 61850-7-510:2012

Local supply mode – In case of a larger disturbance of the external network, one or more generators in a power plant can be set at a minimum production to provide power for local supply only. This type of operation is common in thermal power plants to shorten the start-up time once the network is restored, but can also be used in hydropower plants for practical reasons.

3.4 Fundamental control strategies

The control of hydropower plants can follow different strategies, depending on the external requirements put on the operation of the system.

Speed control in isolated mode:

The purpose of the speed control basically is to maintain constant frequency. For more detailed description, see IEC 61362.

Active power control:

The active power output control with a separate power controller is applied with the unit connected to the grid. For more detailed description, see IEC 61362.

Reactive power control:

Reactive power control includes voltage and power factor control. This can include synchronous condenser mode without active power output, but also added to active power production.

Water flow control:

In this type of control, the power production is roughly adapted to the water flow that is available at the moment. The rate of flow is controlled while the water level is allowed to vary between high and low alarm levels in the dams. The dams are classified after the time over which the inflow and outflow shall add up (daily, weekly, etc.).

Water level control:

In some locations, there are strict limits imposed on the allowed variation of the water level of the dam. This might be due to maritime shipping or by other environmental requirements. In this case, the upper water level of the dam is the overriding concern; power production is adjusted by the water level control function to provide correct flow to maintain the water level.

Cascade control:

In rivers with more than one power plant, the overall water flow in the river is coordinated between plants to ensure an optimal use of the water. Each individual plant can be operated according to the water level model or the water flow model as best suited, depending on the capacity of the local dam and allowed variation in water levels. The coordination is normally done at dispatch centre level, but power plants often have feed-forward functions that automatically will notify the next plant downstream if there is a sudden change of water flow.

Power plants with more than one generating unit and/or more than one dam gate can be provided with a joint control function that controls the total water flow through the plant as well as the water level control.

Documents
Document Sharing Hub
Full document details: PD IEC/TR 61850-7-510:2012

3.5 Hydro power plant specific information

Different devices handle active and reactive power control. The turbine governor provides the active power control by regulating the water flow through the turbine and thus the pole angle between the rotating magnetic flux and the rotor. The excitation system provides the reactive power control by regulating the voltage of the generator. The magnetic flux shall correspond to the shaft torque to keep the generator synchronised to the grid.

Figure 3 shows an example of an arrangement including a joint control function. The set-points will be issued from a dispatch centre and could be one of three optional values. Therefore, the type of set-point that will be used depends on the water control mode that is used for the plant.

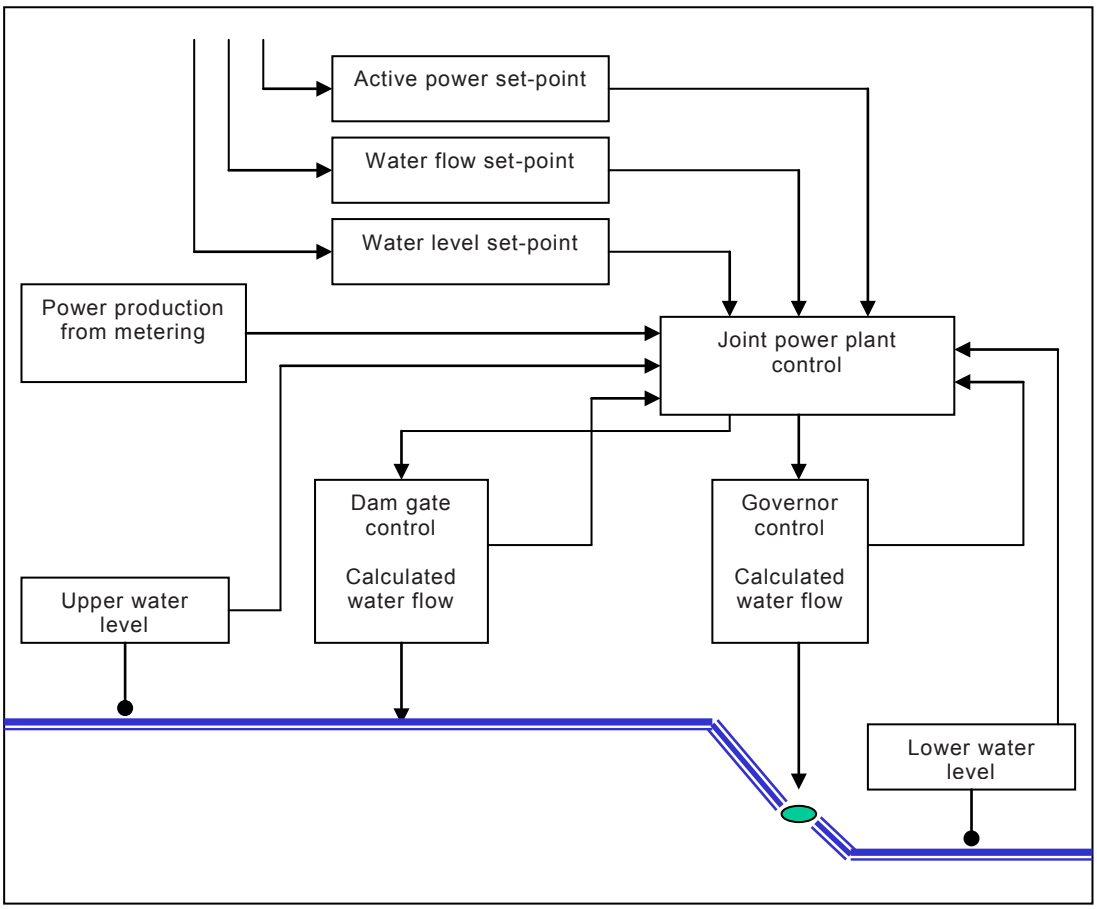

IEC 335/12

Figure 3 – Principles for the joint control function

In case of a reservoir without any power production, the water control function will get the water control set-points from a dispatch centre; in case of a power plant, it will be normally the joint control function that sets the values. The set-point will be either water level or water flow set-points.

The total water flow is the sum of flow through turbines and gates. The turbine control system can, due to this, be provided with different set-points for the control.

- Water flow set-point. The control system will base the regulation on the given water flow level and try to optimise the production.
- Active power set-point. The control system will try to meet the active power, the water flow will be reported back to the overall water control system.

Documents
Document Sharing Hub
Full document details: PD IEC/TR 61850-7-510:2012

- Active power control with speed droop. This is the mode when the unit is contributing to the network frequency control. The active power set-point is balanced over the speed droop setting to obtain the desired power/frequency amplification.
- Frequency set-point. In case of an islanded system or a power plant in peak load duty, the active power will be controlled to exactly meet the demand. This control mode is also used during start-up of the unit, up to the point when the generator is synchronised. Water flow will be reported.

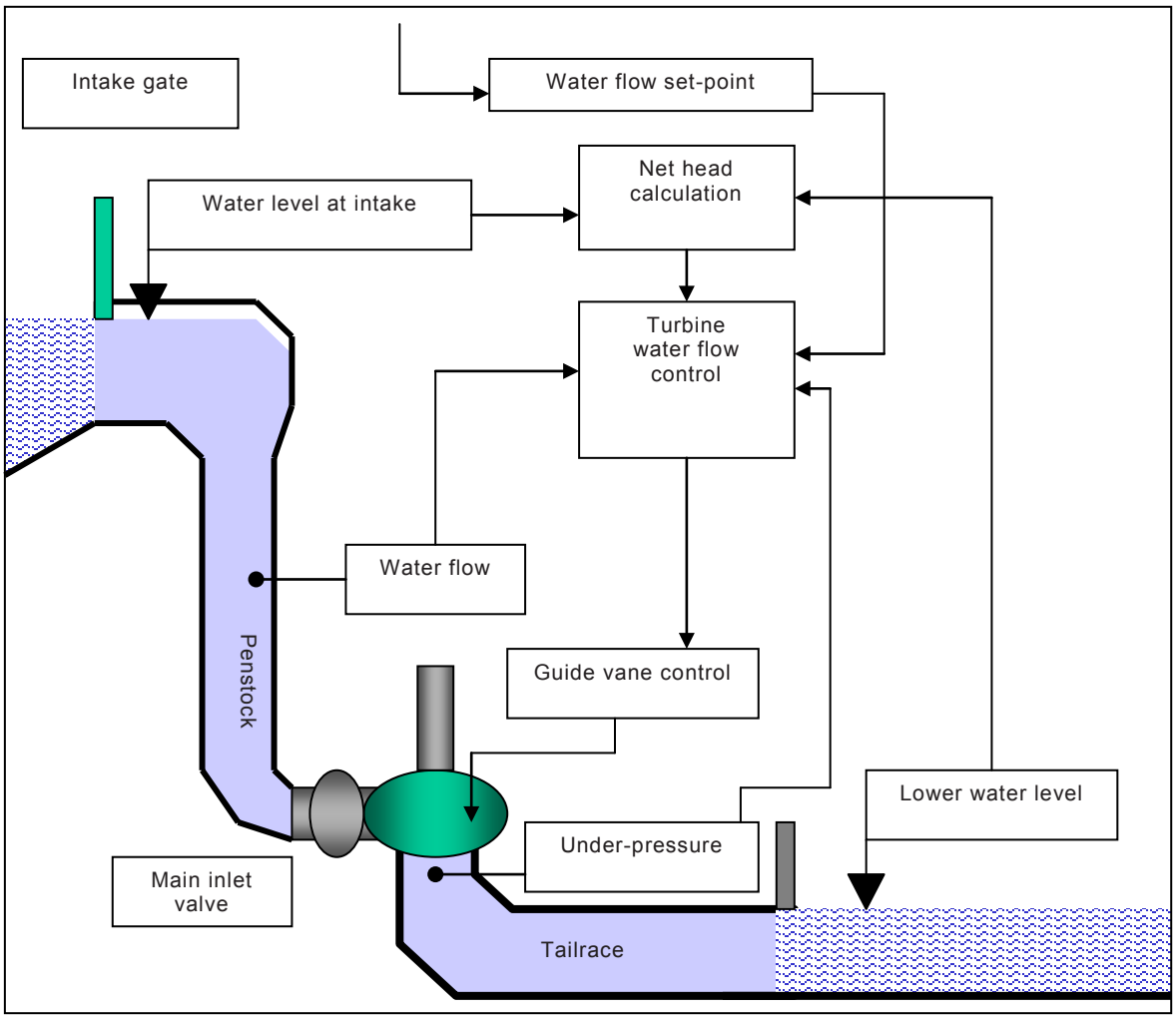

IEC 336/12

Figure 4 – Water flow control of a turbine

Figure 4 shows an example of water flow control for a turbine. Direct measurement of the water flow, as indicated in the figure, is less common. The flow is normally calculated, using the net head, the opening angle of the guide vanes and a correlation curve.

Main inlet valves to shut off the turbine chamber are used for pumped storage plants and power plants with high penstocks.

It is important to differentiate between the water levels of the dam and at the intake. Due to the intake design or if the turbine is running close to rated power, the water level at the intake might be considerably lower than the average for the dam.

The measurement of under-pressure below the turbine chamber is a safety measure, to ensure that the operation of the guide vanes does not cause any dangerous conditions in the tail-race part.

Documents
Document Sharing Hub
Full document details: PD IEC/TR 61850-7-510:2012

4 Structuring control systems

4.1 Basic use of logical nodes

To fulfil all the requirements, functions are decomposed into logical nodes. Refer to Clause 9 of IEC 61850-5 for more information about the logical node concept.

The introduction of additional structures such as logical devices which are composed of logical nodes is not an application requirement, but may be helpful for the modelling.

In order to identify the purpose of a Logical Node with a more general name, a suffix for identification can be added. The limitation is that the sum of characters for prefix and suffix shall not be more than 7. For use in hydropower plants, the recommended logical node prefixes are listed in Table 2.

Table 2 – Recommended LN prefixes

Name / description of function	Recommended LN prefix
Active power	W_
Actuator	Act_
Current	A_
Close	C_
Deflector	Dfl_
Droop	Drp_
Flow	Flw_
Frequency	Hz_
Guide vane	Gv_
Level	Lvl_
Limiter	Lim_
Needle	Ndl_
Open	O
Position	Pos_
Power factor	Pf_
Pressure	Pa_
Reactive power	VAr_
Runner blade	Rb_
Speed	Spd_
Temperature	Tmp_
Unit	Unt_
Voltage	V_

The prefixes in Table 2 are only recommendations, the user may decide on another method to identify the purpose of logical nodes for control functions. If a more specific definition is required, e.g. if a flow control function is intended for water flow or oil flow, this should be identified by the logical device name-string.

4.2 Logical device modelling

The basic standard of IEC 61850 does specify the Logical Node as the highest-level object that has a formal structure given by the standard. However, Logical Nodes shall be

AVA Documents
Document Sharing Hub
Full document details: PD IEC/TR 61850-7-510:2012

assembled in Logical Devices. The formal definition of a Logical Device is given in the standard; the user is though free to select any combination of Logical Nodes that suits the purpose.

As a simple example, we can start by looking at e.g. a pressurised oil system group reference, used to provide initial lifting power to a vertical turbine-generator shaft.

Typically, the system would include an oil tank, a pump, various valves and oil filters. It would also include the thrust bearing, maybe an oil sump and a number of sensors for temperature, pressure, level and other things.

First we define a logical device group reference, or higher-level Logical Device with a LPHD and LLN0 logical node to form a container for addition of logical devices.

Logical device group reference <plant>_<unit>_PresOil
LPHD
LLN0

Looking at the complete name-string, the device name would start with the power plant name, the generating unit name, followed by the system name; in this case “PresOil”.

This shall then be filled with the various logical devices that are required in order to create the oil system.

The first device may be the oil tank. There is a Logical Node KTNK (in IEC 61850-7-4:2010) that covers part of the functionality. KTNK only returns information about the level, we might also be interested in the temperature and the pressure, so we create a logical device that covers, beside the tank, also two pressure sensors, one temperature sensor and one additional level sensor. A logical device shall also include Logical Nodes for common functions e.g. LPHD and LLN0. The logical device would then be:

Logical Device Suffix Tnk

LLN0
KTNK
TPRS1
TPRS2
TTMP
TLVL

LLN0
KPMP
ZMOT
KFIL
TTMP
TFLW

Since there are two temperature sensors, they shall be differentiated by use of instance numbers.

An alternative naming could be to use a prefix in front of the logical node name. The complete name-string could now be e.g. <Plant>_<Unit>PresOil_Tnk_TPRS1 for the first pressure sensor.

The same method should be used for the pressure pump. The Logical Node for a pump, KPMP, does only report the rotational speed. For control, we might also add a motor, a flow sensor as well as an oil filter and at least one temperature sensor.

In an actual application, there could be more temperature sensors, e.g. one for the motor, one for the pump and one for the oil.

The filter Logical Node includes a measurement of differential pressure over itself. If it is important, pressure sensors could be added before and after, otherwise the basic information is available.

Documents
Document Sharing Hub
Full document details: PD IEC/TR 61850-7-510:2012

A more tricky issue is the thrust bearing. IEC 61850-7-410 includes a logical node for the bearing, however this could be seen as either part of the oil system or as part of the generator shaft system.

Since any specific instance of a Logical Node only can have one address string, we shall select one Logical Device where it should belong. In this case, we assume that HBRG belongs to the shaft system and not the oil system.

We may though still create a Logical Device within the oil system that represents the bearing, but includes only the related sensors, e.g. temperature in and out, flow and pressure but not the bearing itself. If we also add a Logical Device for a control valve, the oil system would get this final form (see Figure 5a).

Since the logical devices names size does not exceed 5 characters, then it is preferable to use a LN prefix naming structure to reduce the complexity of the logical device. See Figure 5b.

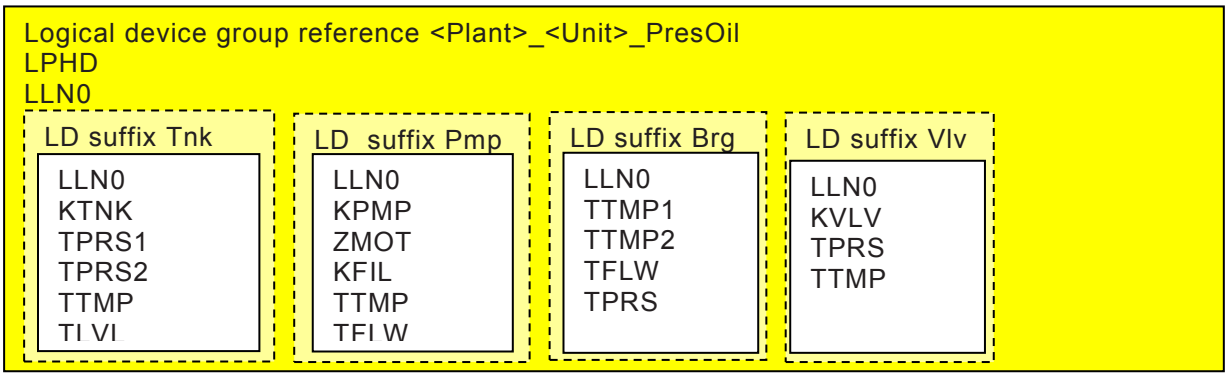

IEC 337/12

Figure 5a – Pressurised oil system with LD suffix

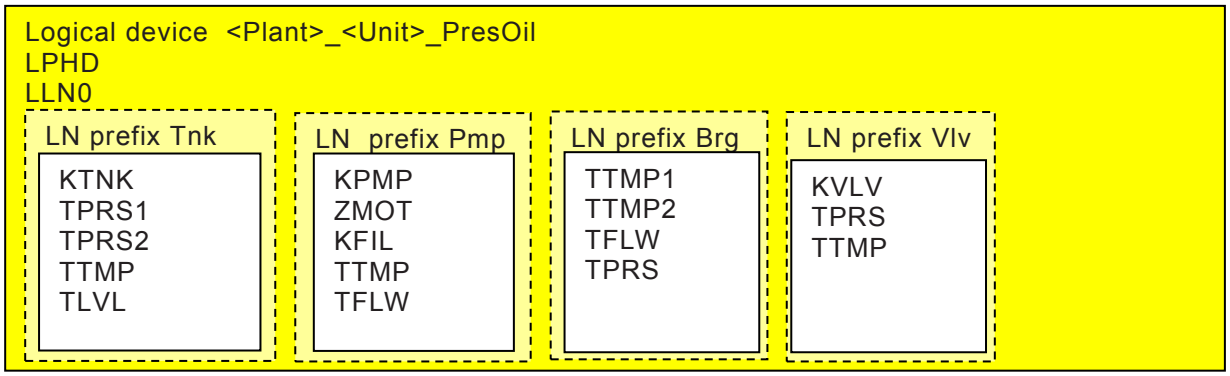

IEC 338/12

Figure 5b – Pressurised oil system with LN prefix

Figure 5 – Pressurised oil systems with LD suffix and with LN prefix

Documents
Document Sharing Hub
Full document details: PD IEC/TR 61850-7-510:2012

4.3 Example of application for an excitation system

4.3.1 General

Figure 6 shows an example of functional blocks of an excitation system, with typical logical nodes that can be used within each functional element.

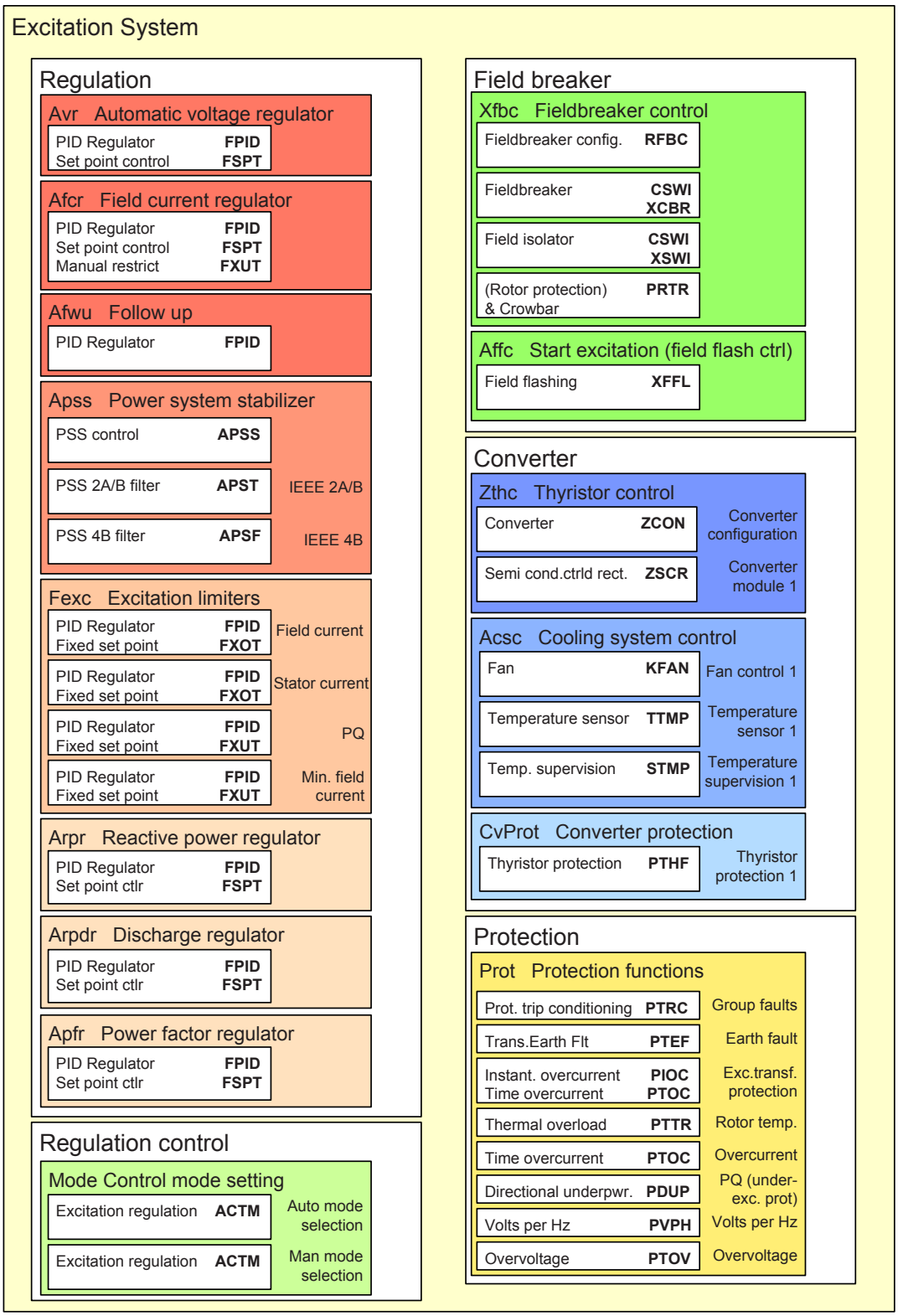

Figure 6 – Examples of logical nodes used in an excitation system

AVA Documents
Document Sharing Hub
Full document details: PD IEC/TR 61850-7-510:2012

For practical purposes, the excitation system will be divided in a number of Logical Devices that can be addressed and handled separately.

The division into functional blocks (Regulation, Field breaker, Converter and Protection), as well as in Logical Devices (Avr, Afcr,...) as represented on Figure 6 is only informative and may be interpreted in different ways. The following alternatives may be considered:

- Different assignment of Logical Devices to the functional blocks, e.g. Affc may be part of Converter instead of Field breaker.
- Different division between the Logical Devices, depending on different regulation models, e.g. automatic mode LD and manual mode LD, each covering regulation loops and their limitations.
- Different scaling of the LD's, e.g. the functional blocks may be used as LD's itself.

Table 3 gives a non-exhaustive example of how this can be done for a larger excitation system. The notation {inst} means that there might be more than one logical device of a certain type. A number shall replace the {inst} if instantiation is used.

Table 3 – Logical device structure

Logical device name	Functionality
Avr{inst}	Automatic voltage regulator
Arpr{inst}	Reactive power regulator
Apfr{inst}	Power factor regulator
Afcr{inst}	Field current regulator
Apss{inst}	PSS
Aut{inst}	Automatic control mode
Man{inst}	Manual control mode
Boost{inst}	Boosting function
Fexcl{inst}	Excitation limiter
Flux{inst}	Flux limiter (volt /hertz limiter)
Fstcl{inst}	Stator current limiter
Arpdr{inst}	Discharge regulator
Affc{inst}	Start excitation (field flash control)
Xfbc{inst}	Field breaker control
Zthc{inst}	Thyristor control
Acsc{inst}	Cooling system control
CvProt{inst}	Converter protections
Prot{inst}	Protection functions (general)
Ialm{inst}	Alarm handling
Meas{inst}	Electric measurements
Texc{inst}	Excitation transformer
Aseq{inst}	Start-stop sequence
Irec{inst}	Fault and event recording
Ggio{inst}	I/O cards

Figure 7 is an example for the functional structure of the regulation part of an excitation system. The coloured parts represent logical devices.

Documents
Document Sharing Hub
Full document details: PD IEC/TR 61850-7-510:2012

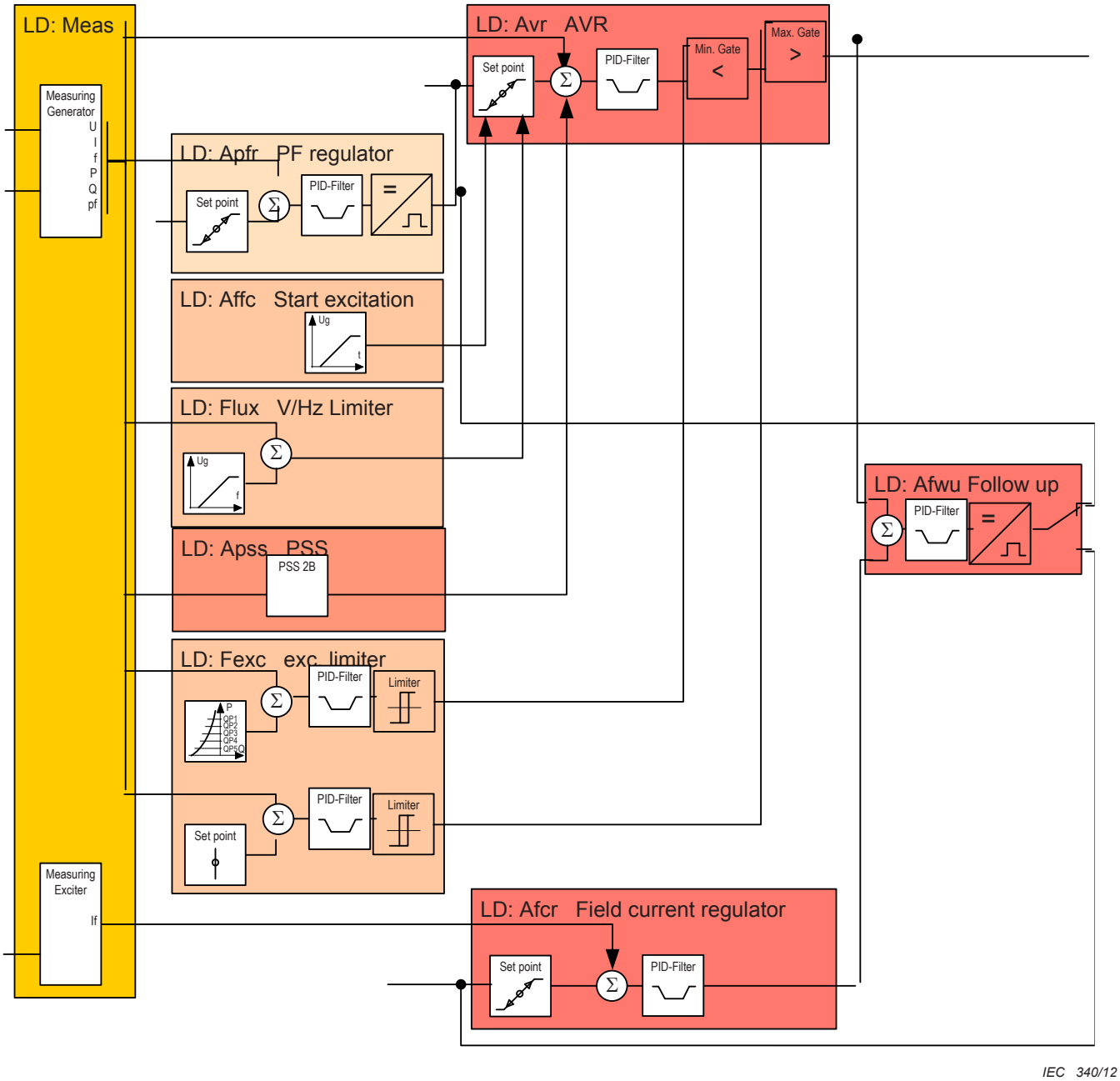

Figure 7 – Example of logical devices of the regulation part of an excitation system

NOTE Standard IEC 61850 generally allows reading and writing parameter settings using the IEC 61850 interface. From practical point of view, writing parameters using the IEC 61850 interface will not be allowed. Therefore, the following examples show settings as read only signals.

Documents
Document Sharing Hub
Full document details: PD IEC/TR 61850-7-510:2012

4.3.2 Voltage regulation example

Figure 8 shows an automatic voltage regulator.

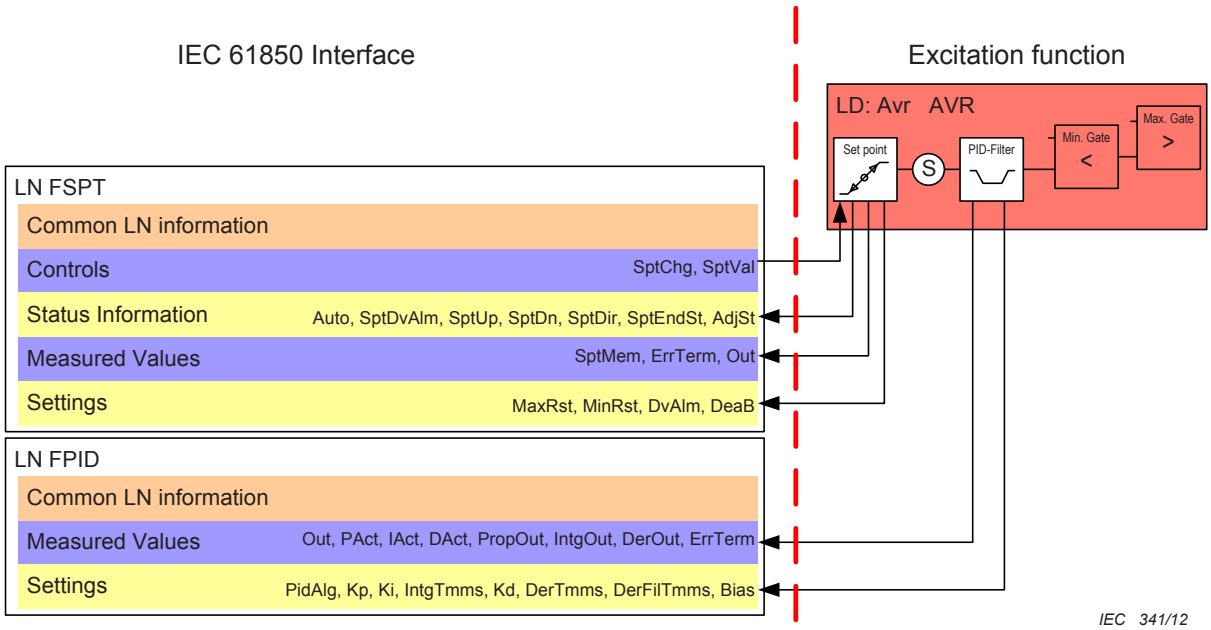

Figure 8 – AVR basic regulator

Figure 9 shows a power factor regulator.

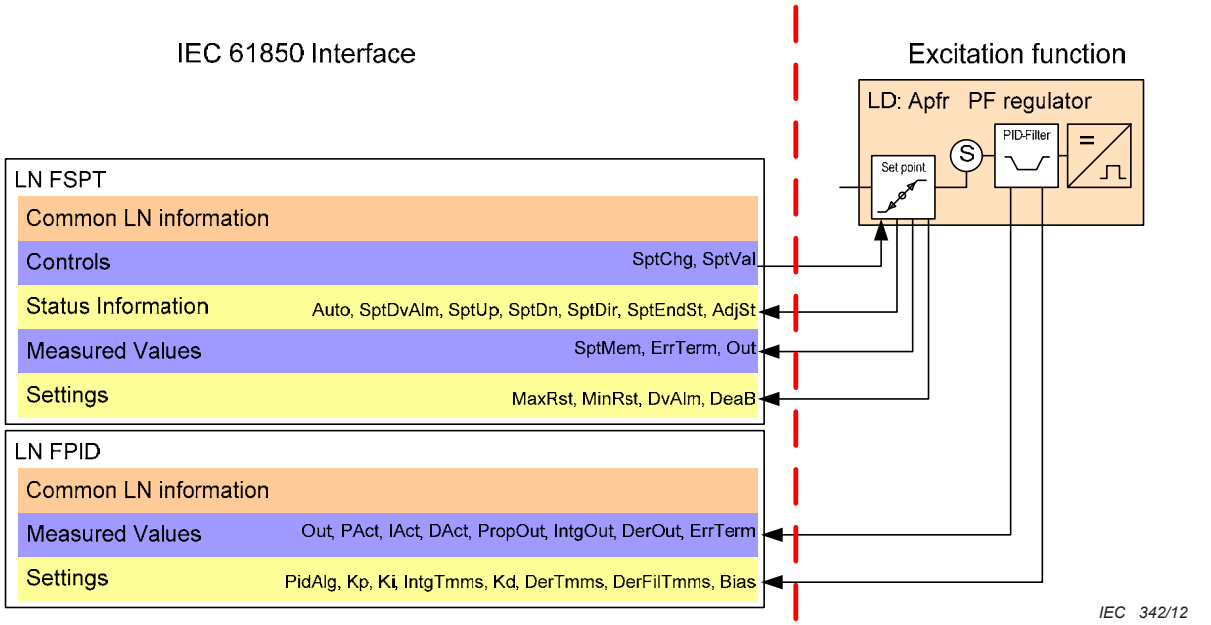

Figure 9 – Superimposed regulators, power factor regulator

Documents
Document Sharing Hub
Full document details: PD IEC/TR 61850-7-510:2012

Figure 10 shows an over-excitation limiter.

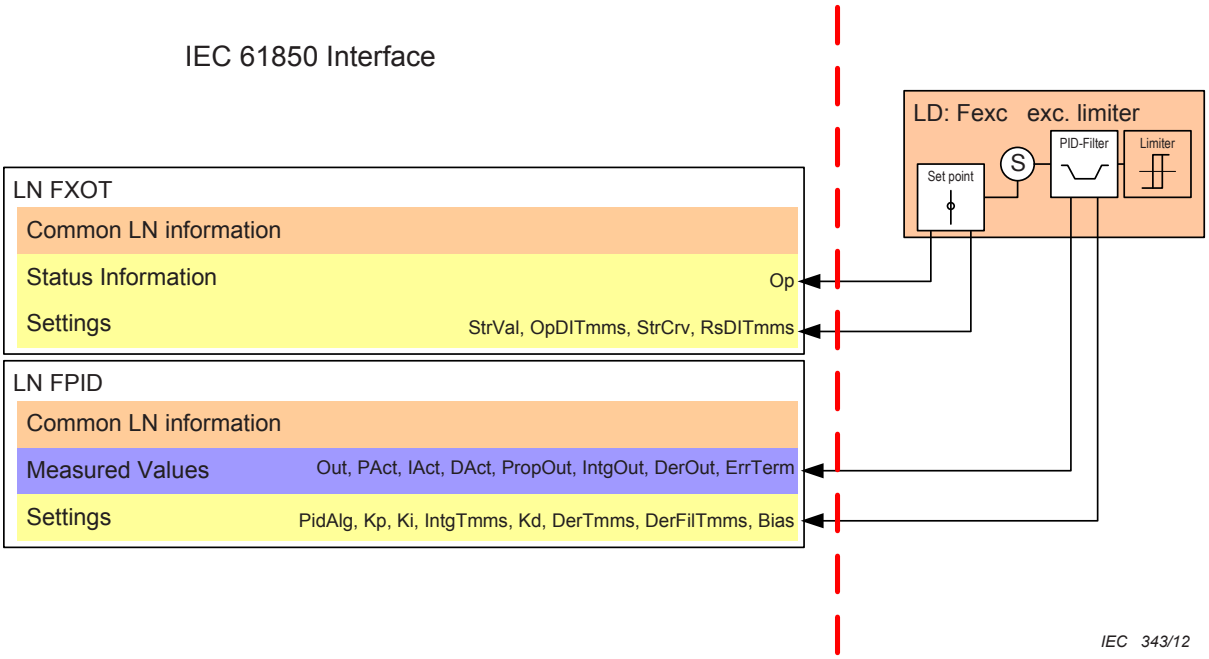

Figure 10 – Superimposed regulators, over-excitation limiter

Figure 11 shows an under-excitation limiter.

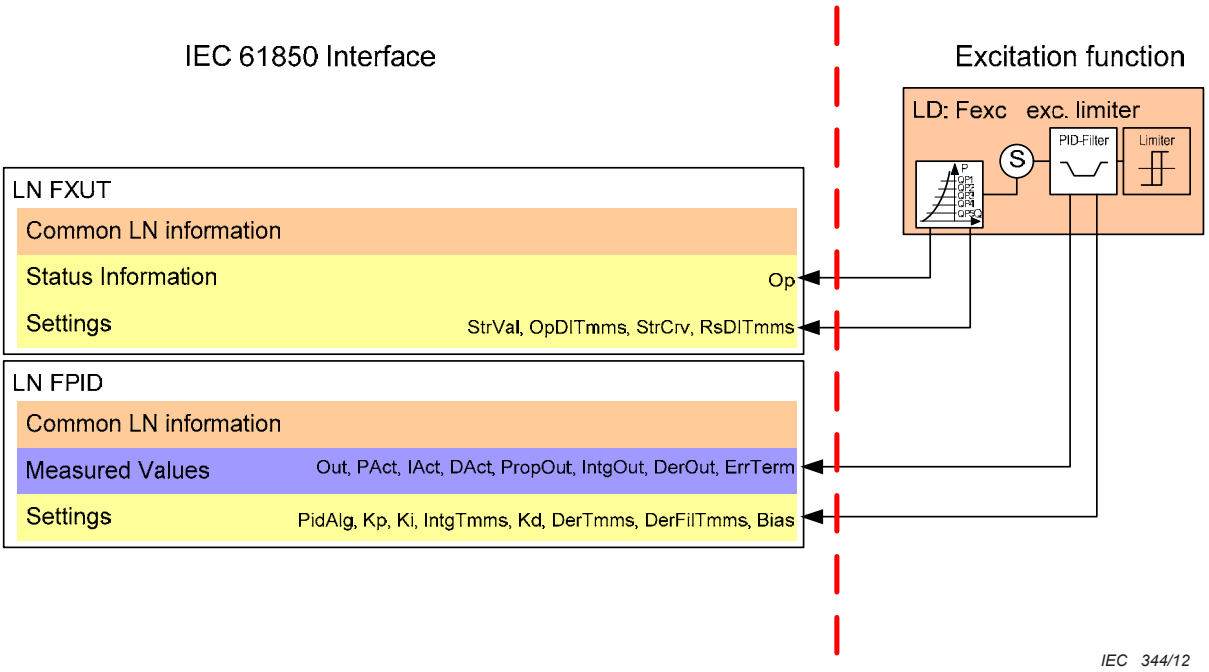

Figure 11 – Superimposed regulators, under-excitation limiter

Documents
Document Sharing Hub
Full document details: PD IEC/TR 61850-7-510:2012

Figure 12 shows a follow up.

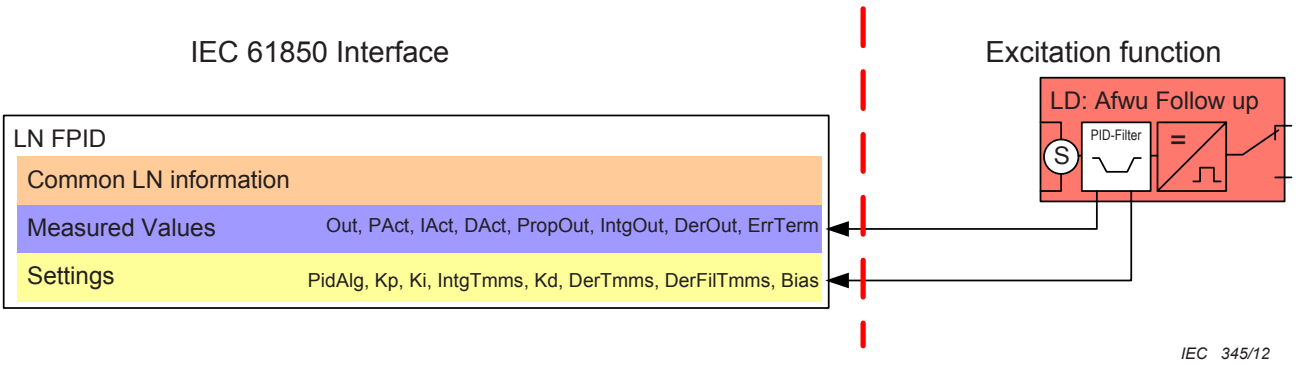

Figure 12 – Superimposed regulators, follow up

4.3.3 PSS example

Figure 13 shows a power system stabilizer function.

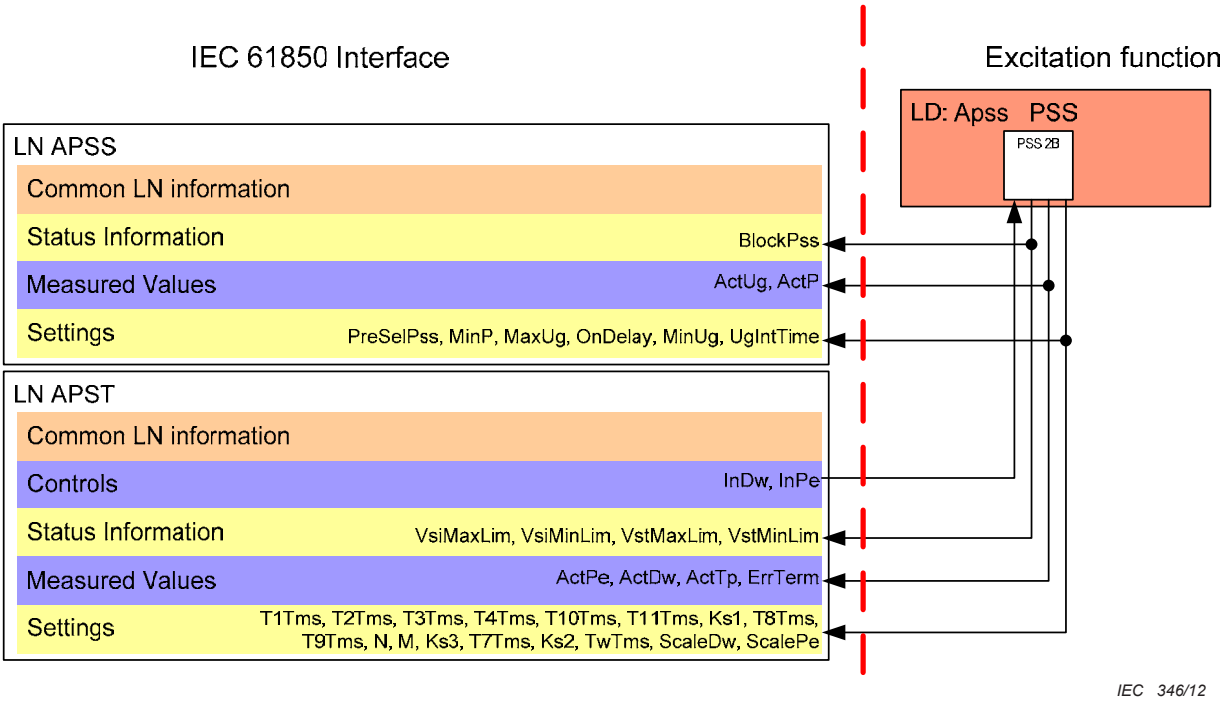

Figure 13 – Power system stabilizer function

The standard includes three logical nodes that can be combined to represent a PSS function: RPSS that provides general information, RPST that represents a IEEE 2A/B filter and RPSF that represents a IEEE 4A filter. In Figure 13 above, only the 2A/B filter is shown.

Documents
Document Sharing Hub
Full document details: PD IEC/TR 61850-7-510:2012