PD IEC/TR 61850-90-1:2010

BSI Standards Publication

Communication networks and systems for power utility automation

Part 90-1: Use of IEC 61850 for the communication between substations

NO COPYING WITHOUT BSI PERMISSION EXCEPT AS PERMITTED BY COPYRIGHT LAW

raising standards worldwide™

Full document details: PD IEC/TR 61850-90-1:2010

National foreword

This Published Document is the UK implementation of IEC/TR 61850-90-1:2010.

The UK participation in its preparation was entrusted to Technical Committee PEL/57, Power systems management and associated information exchange.

A list of organizations represented on this committee can be obtained on request to its secretary.

This publication does not purport to include all the necessary provisions of a contract. Users are responsible for its correct application.

© BSI 2010

ISBN 978 0 580 67722 9

ICS 33.200

Compliance with a British Standard cannot confer immunity from legal obligations.

This Published Document was published under the authority of the Standards Policy and Strategy Committee on 30 April 2010.

Amendments issued since publication

Amd. No.	Date	Text affected

Documents
Document Sharing Hub

Full document details: PD IEC/TR 61850-90-1:2010

IEC/TR 61850-90-1

Edition 1.0 2010-03

TECHNICAL REPORT

colour inside

Communication networks and systems for power utility automation – Part 90-1: Use of IEC 61850 for the communication between substations

INTERNATIONAL
ELECTROTECHNICAL
COMMISSION

PRICE CODE XC

ICS 33.200

ISBN 2-8318-1082-1

® Registered trademark of the International Electrotechnical Commission

Documents
Document Sharing Hub

Full document details: PD IEC/TR 61850-90-1:2010

CONTENTS

FOREWORD 5
INTRODUCTION 7
1 Scope 8
2 Normative references 8
3 Terms and definitions 9
4 Abbreviated terms 9
5 Use cases 10
5.1 General 10
5.2 Distance line protection with permissive overreach tele-protection scheme 10
5.3 Distance line protection with blocking tele-protection scheme 13
5.4 Directional comparison protection 15
5.5 Transfer/Direct tripping 18
5.6 Interlocking 20
5.7 Multi-phase auto-reclosing application for parallel line systems 22
5.8 Current differential line protection 24
5.9 Phase comparison protection 28
5.10 Other applications 31
5.10.1 General 31
5.10.2 Fault locator system (2, 3 terminals) 31
5.10.3 System integrity protection schemes (SIPS) 33
5.10.4 Real time predictive generator shedding 36
5.10.5 Out-of-step detection 39
5.10.6 Synchrophasors 41
5.10.7 Remedial action schemes (RAS) 41
6 Communication requirements for substation-to-substation communication 41
6.1 General issues 41
6.1.1 Introduction 41
6.1.2 Logical allocation of functions and interfaces (5.2 in IEC 61850-5) 41
6.1.3 The role of interfaces 43
6.1.4 Response behaviour requirements 43
6.2 Functions based on substation-substation communication 43
6.2.1 Protection functions 43
6.2.2 Control functions 44
6.3 Message performance requirements 44
6.3.1 Transfer time definition (13.4 in IEC 61850-5) 44
6.4 The introduction and use of message performance classes 47
6.4.1 General 47
6.4.2 Control and protection 47
6.4.3 Metering and power quality 49
6.5 General requirements for data integrity 51
6.6 Requirements for teleprotection – Reliability (security and dependability) 51
6.6.1 General 51
6.6.2 Security requirements for protection schemes according to CIGRE and IEC 51
6.6.3 Dependability requirements for protection schemes according to CIGRE and IEC 52

AVA Documents
Document Sharing Hub
Full document details: PD IEC/TR 61850-90-1:2010

7 Considerations on security and dependability issues when using Ethernet networks 52
7.1 General 52
7.2 Security of traffic 52
7.3 Dependability of traffic 53
7.4 Avoiding GOOSE packets flooding the WAN 53
7.5 Summary on recommendations for using Ethernet for communication between substations 54
7.5.1 General 54
7.5.2 Example of packet delays 54
7.6 Useful features of some Ethernet telecommunications networks 55
8 Communication aspects 55
8.1 Services 55
8.2 Communication architecture 55
8.2.1 Preliminary notes and definitions 55
8.2.2 Tunnelling 56
8.2.3 Gateway 57
9 Modelling 58
9.1 General architecture 58
9.2 Communication interface ITPC 59
9.3 Communication-aided protection schemes and direct tripping 61
9.3.1 Proposed model 61
9.3.2 LN PSCH 62
9.4 Differential protection schemes 62
9.4.1 Proposed model 62
9.4.2 LN RMXU 65
9.4.3 SV format 65
10 Configuration aspects 66
10.1 General 66
10.2 Direct communication link 66
10.2.1 General 66
10.2.2 SCL enhancements 71
10.2.3 SCL example 71
10.3 Tele-protection equipment between substations 77
Bibliography 79

Figure 1 – Distance line protection with permissive overreach tele-protection scheme 10
Figure 2 – Distance line protection with blocking tele-protection scheme 13
Figure 3 – Directional comparison with permissive scheme 16
Figure 4 – Transfer/Direct tripping 18
Figure 5 – Interlocking – Interoperation 20
Figure 6 – Auto-reclosing 22
Figure 7 – Current differential line protection 25
Figure 8 – Phase comparison protection 28
Figure 9 – Principle to detect internal fault by phase comparison 28
Figure 10 – Fault locator system (2, 3 terminals) 31
Figure 11 – Example of a system integrity protection scheme 33
Figure 12 – Real time predictive type generator shedding system 36

Documents
Document Sharing Hub

Full document details: PD IEC/TR 61850-90-1:2010

Figure 13 – Out-of-step detection 39
Figure 14 – Logical interfaces between substation A and substation B 42
Figure 15 – Transfer time for binary and other signals over a serial connection 45
Figure 16 – Transfer time for binary signal with conventional output and input relays 45
Figure 17 – Definition of transfer time *t* for binary signals in case of line protection 46
Figure 18 – Definition of transfer time *t* over serial link in case of line protection 46
Figure 19 – Basic SS-to-SS communication structure 56
Figure 20 – SS-to-SS communication via tunnel 57
Figure 21 – SS-to-SS communication via proxy gateway 58
Figure 22 – Allocation of the LN ITPC representing the communication channel and the LNs providing the data to be exchanged between substations 59
Figure 23 – Protection application example for permissive underreach distance teleprotection scheme and appropriate logical node modelling 61
Figure 24 – Communication system based on current system 63
Figure 25 – Communication system based on future system 63
Figure 26 – Proposed 2-terminal current differential feeder protection relay model 64
Figure 27 – Proposed 3-terminal current differential feeder protection relay model 64
Figure 28 – SCD files and SED region for SS-to-SS communication 67
Figure 29 – Enhanced engineering process 68
Figure 30 – IED states when exchanging SED files 70
Figure 31 – Proxy gateway method (AA1F3, AA2F3 are Proxy gateways) 78

Table 1 – Grouping of protection and control interfaces 42
Table 2 – Protection functions using substation-substation communication 43
Table 3 – Control functions using substation-substation communication 44
Table 4 – Change of transfer time and synchronisation method 50
Table 5 – Performance classes for time tagging of events 50
Table 6 – Time performance classes for instrument transformer synchronisation 50
Table 7 – The bit error rate as indication for communication quality 51
Table 8 – Logical node ITPC 60
Table 9 – Logical node PSCH 62
Table 10 – Logical node RMXU 65
Table 11 – Sampled value (SV) format definition 66
Table 12 – IED engineering control types 69

Documents
Document Sharing Hub
Full document details: PD IEC/TR 61850-90-1:2010

INTERNATIONAL ELECTROTECHNICAL COMMISSION

COMMUNICATION NETWORKS AND SYSTEMS FOR POWER UTILITY AUTOMATION –

Part 90-1: Use of IEC 61850 for the communication between substations

FOREWORD

1) The International Electrotechnical Commission (IEC) is a worldwide organization for standardization comprising all national electrotechnical committees (IEC National Committees). The object of IEC is to promote international co-operation on all questions concerning standardization in the electrical and electronic fields. To this end and in addition to other activities, IEC publishes International Standards, Technical Specifications, Technical Reports, Publicly Available Specifications (PAS) and Guides (hereafter referred to as "IEC Publication(s)"). Their preparation is entrusted to technical committees; any IEC National Committee interested in the subject dealt with may participate in this preparatory work. International, governmental and non-governmental organizations liaising with the IEC also participate in this preparation. IEC collaborates closely with the International Organization for Standardization (ISO) in accordance with conditions determined by agreement between the two organizations.
2) The formal decisions or agreements of IEC on technical matters express, as nearly as possible, an international consensus of opinion on the relevant subjects since each technical committee has representation from all interested IEC National Committees.
3) IEC Publications have the form of recommendations for international use and are accepted by IEC National Committees in that sense. While all reasonable efforts are made to ensure that the technical content of IEC Publications is accurate, IEC cannot be held responsible for the way in which they are used or for any misinterpretation by any end user.
4) In order to promote international uniformity, IEC National Committees undertake to apply IEC Publications transparently to the maximum extent possible in their national and regional publications. Any divergence between any IEC Publication and the corresponding national or regional publication shall be clearly indicated in the latter.
5) IEC itself does not provide any attestation of conformity. Independent certification bodies provide conformity assessment services and, in some areas, access to IEC marks of conformity. IEC is not responsible for any services carried out by independent certification bodies.
6) All users should ensure that they have the latest edition of this publication.
7) No liability shall attach to IEC or its directors, employees, servants or agents including individual experts and members of its technical committees and IEC National Committees for any personal injury, property damage or other damage of any nature whatsoever, whether direct or indirect, or for costs (including legal fees) and expenses arising out of the publication, use of, or reliance upon, this IEC Publication or any other IEC Publications.
8) Attention is drawn to the Normative references cited in this publication. Use of the referenced publications is indispensable for the correct application of this publication.
9) Attention is drawn to the possibility that some of the elements of this IEC Publication may be the subject of patent rights. IEC shall not be held responsible for identifying any or all such patent rights.

The main task of IEC technical committees is to prepare International Standards. However, a technical committee may propose the publication of a technical report when it has collected data of a different kind from that which is normally published as an International Standard, for example "state of the art".

IEC 61850-90-1, which is a technical report, has been prepared by IEC technical committee 57: Power systems management and associated information exchange.

Documents
Document Sharing Hub

Full document details: PD IEC/TR 61850-90-1:2010

The text of this technical report is based on the following documents:

Enquiry draft	Report on voting
57/992/DTR	57/1021/RVC

Full information on the voting for the approval of this technical report can be found in the report on voting indicated in the above table.

This publication has been drafted in accordance with the ISO/IEC Directives, Part 2.

A list of all parts of the IEC 61850 series, under the general title: *Communication networks and systems for power utility automation*, can be found on the IEC website.

The committee has decided that the contents of this amendment and the base publication will remain unchanged until the stability date indicated on the IEC web site under "http://webstore.iec.ch" in the data related to the specific publication. At this date, the publication will be

- reconfirmed,
- withdrawn,
- replaced by a revised edition, or
- amended.

A bilingual version of this publication may be issued at a later date.

IMPORTANT – The 'colour inside' logo on the cover page of this publication indicates that it contains colours which are considered to be useful for the correct understanding of its contents. Users should therefore print this document using a colour printer.

Documents
Document Sharing Hub

Full document details: PD IEC/TR 61850-90-1:2010

INTRODUCTION

When IEC 61850 was prepared, it was intended for use in information exchange between devices of a substation automation system. In the mean time, the concepts are now used as well in other application domains of the power utility system. Therefore, IEC 61850 is on the way to becoming the foundation for a globally standardized utility communication network.

With existing and new applications in the field of power system operation and protection, the requirement to exchange standardized information directly between substations is increasing. IEC 61850 shall be the basis for this information exchange.

IEC 61850 provides the basic features to be used for that information exchange, however, some extensions to IEC 61850 may be required. This technical report provides a comprehensive overview of the different aspects that need to be considered when using IEC 61850 for information exchange between substations. Areas that require extension of specific parts of the existing IEC 61850 standard will later be incorporated in future editions of the affected part of IEC 61850.

A similar report discussing the use of IEC 61850 for communication between substations and control centres is under preparation as IEC 61850-90-2[1)]. Further, a similar report discussing the use of IEC 61850 for wide-area RAS (remedial action schemes) is being contemplated; this will likely be IEC 61850-90-3[1)].

The scope of IEC 61850 is no longer limited to substations. This is reflected in the changed title of the series. New domain specific parts have been added to the series. Working Group 10 of Technical Committee 57 is currently preparing the second edition of the basic parts of IEC 61850.

1) Under consideration.

Documents
Document Sharing Hub

Full document details: PD IEC/TR 61850-90-1:2010

COMMUNICATION NETWORKS AND SYSTEMS FOR POWER UTILITY AUTOMATION –

Part 90-1: Use of IEC 61850 for the communication between substations

1 Scope

This part of IEC 61850 provides a comprehensive overview on the different aspects that need to be considered while using IEC 61850 for information exchange between substations. In particular, this technical report

- defines use cases that require an information exchange between substations;
- describes the communication requirements;
- gives guidelines for the communication services and communication architecture to be used;
- defines data as a prerequisite for interoperable applications;
- does not define implementations which guarantee interoperability between different IEDs;
- describes the usage and enhancements of the configuration language SCL.

2 Normative references

The following referenced documents are indispensable for the application of this document. For dated references, only the edition cited applies. For undated references, the latest edition of the referenced document (including any amendments) applies.

IEC 60044 (all parts), *Instrument transformers*

IEC 60834-1:1999, *Teleprotection equipment of power systems – Performance and testing – Part 1: Command systems*

IEC 60834-2:1993, *Performance and testing of teleprotection equipment of power systems – Part 2: Analogue comparison systems*

IEC 60870-4, *Telecontrol equipment and systems – Part 4: performance requirements*

IEC/TS 61850-2, *Communication networks and systems in substations – Part 2: Glossary*

IEC 61850 (all parts), C*ommunication networks and systems for power utility automation*

IEC 61850-3, *Communication networks and systems in substations – Part 3: General requirements*

IEC 61850-5:2003, *Communication networks and systems in substations – Part 5: Communication requirements for functions and device models*

IEC 61850-6:2009, *Communication networks and systems for power utility automation – Part 6: Configuration description language for communication in electrical substations related to IEDs*

Documents
Document Sharing Hub

Full document details: PD IEC/TR 61850-90-1:2010

IEC 61850-7-2:2010, *Communication networks and systems for power utility automation – Part 7-2: Basic communication structure – Abstract communication service interface (ACSI)*

IEC 61850-7-4:2010, *Communication networks and systems for power utility automation – Part 7-4: Basic communication structure – Compatible logical node classes and data object classes*

IEC 61850-8-1,___ *Communication networks and systems for power utility automation – Part 8-1: Specific Communication Service Mapping (SCSM) - Mappings to MMS (ISO 9506-1 and ISO 9506-2) and to ISO/IEC 8802-3*[2)]

IEC 61850-9-2,___ *Communication networks and systems in substations – Part 9-2: Specific Communication Service Mapping (SCSM) – Sampled values over ISO/IEC 8802-3*[2)]

IEC 62053-22, *Electricity metering equipment (a.c.) – Particular requirements – Part 22: Static meters for active energy (classes 0,2 S and 0,5 S)*

IEC/TS 62351-6, *Power systems management and associated information exchange – Data and communication security – Part 6: Security for IEC 61850*

IEC 62439, *High availability automation networks*

ANSI/IEEE 1588, *Standard for a Precision Clock Synchronization Protocol for Networked Measurement and Control Systems / revision of ANSI/IEEE 1588-2002 / Approved 2008-09-10*

IEEE 802.1Q, *Local and metropolitan area networks – Virtual bridged local area networks*

3 Terms and definitions

For the purposes of this document, the terms and definitions given in IEC 61850-2 and IEC 61850-7-2 apply.

4 Abbreviated terms

BER	Bit error ratio
Bkr	Circuit breaker
C/S	Client / Server
CE	Central equipment
DCB	Directional comparison blocking
DF	Directional relay to detect forward faults
EHV	Extreme high voltage
HV	High voltage
IF, I/F	Interface
I/F -R	Interface to receive data
I/F -S	Interface to send data
L2TP	Layer 2 tunnelling protocol
MV	Medium voltage
PDH	Plesiochronous digital hierarchy
PMU	Phasor measurement units
QA	Circuit breaker
QB	Line disconnector
QC	Earthing switch
QinQ	802.1Q in 802.1Q (VLAN stacking)
RAS	Remedial action schemes

2) To be published

Documents
Document Sharing Hub

Full document details: PD IEC/TR 61850-90-1:2010

RO	Overreaching distance zone
RT	Remote terminal
Rx	Receiver
SDH	Synchronous digital hierarchy
SIPS	System integrity protection scheme
SONET	Synchronous optical NETwork transport system
SS	Substation
TPI	Teleprotection interface
Tx	Transmitter
VoIP	Voice over IP (Internet protocol)
VPN	Virtual private network
WAN	Wide area network

NOTE Abbreviations used for the identification of the common data classes and as names of the attributes are specified in the specific clauses of this document and are not repeated here.

5 Use cases

5.1 General

For the purpose of communication between substations, the following functions are considered.

Conventional CTs and VTs are assumed for input to relays in the following use cases. However, they could be replaced by newer technology, such as digital input based on process bus, without any significant change in the descriptions.

5.2 Distance line protection with permissive overreach tele-protection scheme

Summary:

When a distance relay detects a forward fault in the overreach zone, it sends a permissive signal to the remote end, see Figure 1. If that relay also receives a permissive signal (from the remote end), the relay sends a trip signal to the local CB.

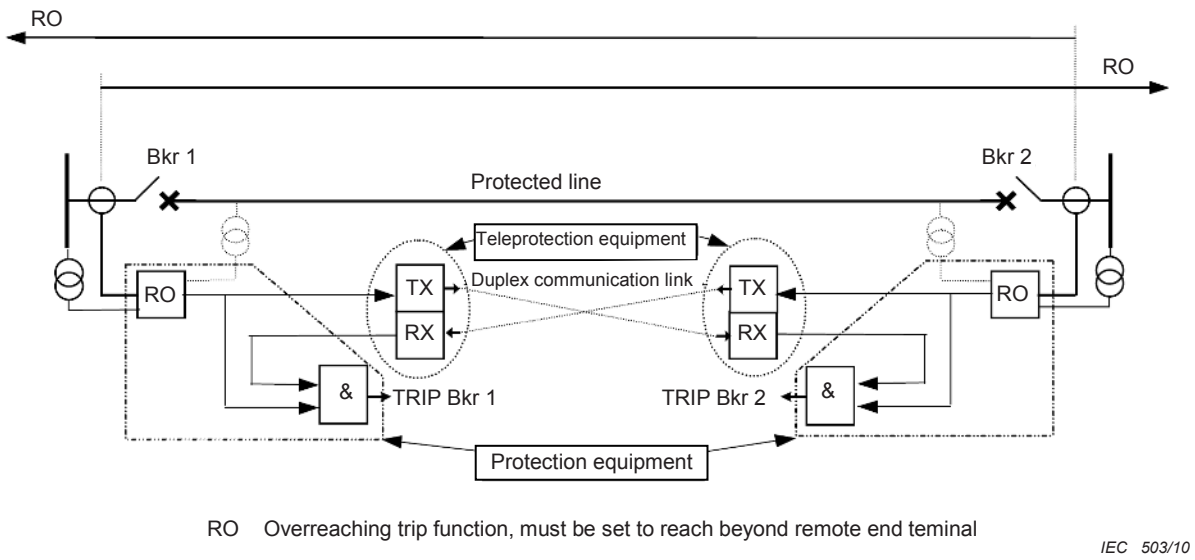

Figure 1 – Distance line protection with permissive overreach tele-protection scheme [1][3)]

3) Figures in square brackets refer to the Bibliography.

Documents
Document Sharing Hub
Full document details: PD IEC/TR 61850-90-1:2010

Constraints / Assumptions / Design considerations:

- The permissive signal needs a minimum of 1 bit. If it is a phase segregated signal, it needs 3 bits. If it is a phase segregated, and phase-to-phase and phase-to-earth are independent, the signal needs 6 bits. Directional earth fault detection may need another 1 bit.
- Data is sent only when a forward fault is detected.
- For communication channel failure, alternative actions must be considered.
- For fast tripping, the propagation, delay shall be small (e.g.: less than 5 ms).
- A high reliability is needed (e.g. BER less than 10^{-6}, alternative route, duplicated).

Use case diagram:

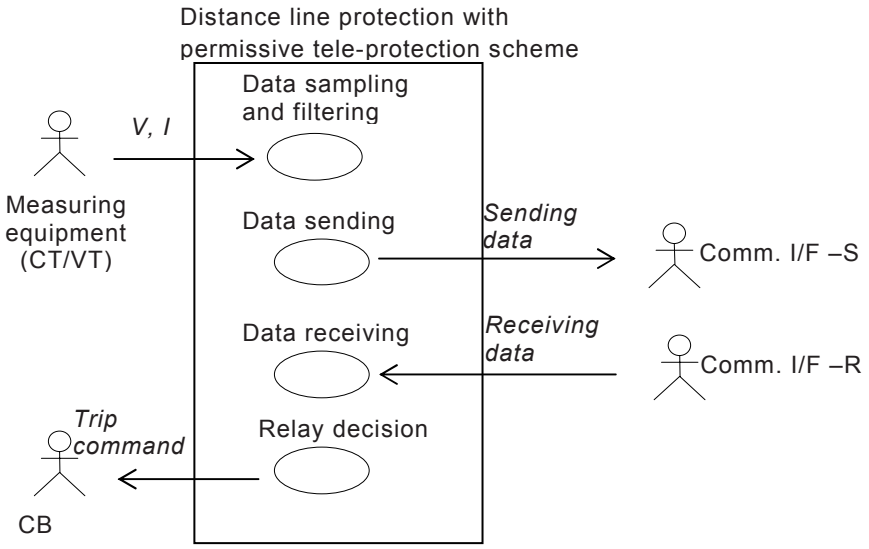

Actor(s):

Name	Role description
Measuring equipment	Measures current and voltage from protected line
Comm. I/F –S	Receives data from the local relay and sends the data to the remote end
Comm. I/F –R	Receives data from the remote end and gives the data to the local relay
CB	Disconnects the protected line from other system (Circuit breaker)

Use case(s):

Name	Services or information provided
Data sampling and filtering	Samples current and voltage data from measuring equipment and filters them
Data sending	Calculates a distance to the fault using filtered data. When a distance protection detects a forward fault, the distance protection sends the permissive signal to Comm. I/F –S (the remote end)
Data receiving	Receives the permissive signal from Comm. I/F –R (the remote end)
Relay decision	When the distance protection detects the forward faults and receives permissive signal from remote end, the distance protection issues a trip command to the CB

Documents
Document Sharing Hub

Full document details: PD IEC/TR 61850-90-1:2010

Basic flow:

Data sampling and filtering

Use case step	Description
Step 1	Current and voltage are given to distance protection by measuring equipment
Step 2	Distance protection samples an analogue value and converts it to digital data
Step 3	Distance protection removes any unwanted frequency components from the sampled data using a digital filter

Data sending

Use case step	Description
Step 1	Distance protection stores the filtered instantaneous data
Step 2	Distance protection calculates a distance to the fault using filtered data
Step 3	When a distance protection detects a forward fault to a pre-determined distance, a distance protection sends the permissive signal to Comm. I/F –S (in order to send the data to a remote end relay)
Step 4	Comm. I/F –S send the information to remote end

Data receiving

Use case step	Description
Step 1	Comm. I/F –R receives the data from the remote end
Step 2	Comm. I/F –R gives the received data to distance protection
Step 3	Distance protection receives the data

Relay decision

Use case step	Description
Step 1	When the distance protection detects the forward faults in a predetermined zone, and receives a permissive signal from the remote end, the distance protection issues a trip command to the CB

Exceptions / Alternate flow:

N.A.

Pre-conditions:

N.A.

Post-conditions:

N.A.

References:

[1] Protection Using Telecommunication

Documents
Document Sharing Hub
Full document details: PD IEC/TR 61850-90-1:2010

5.3 Distance line protection with blocking tele-protection scheme

Summary:

When a distance relay detects reverse faults, it sends a blocking signal to the remote end. If the relay detects a forward fault and does not receive the blocking signal, the relay sends a trip signal to the local CB, see Figure 2.

A variant involves the directional comparison blocking (DCB) using a non-directional element to send a blocking signal for any fault (other wording: “starts the carrier”). The operation of the forward element removes the blocking signal (“stops the carrier”) and sends a trip signal to the local CB.

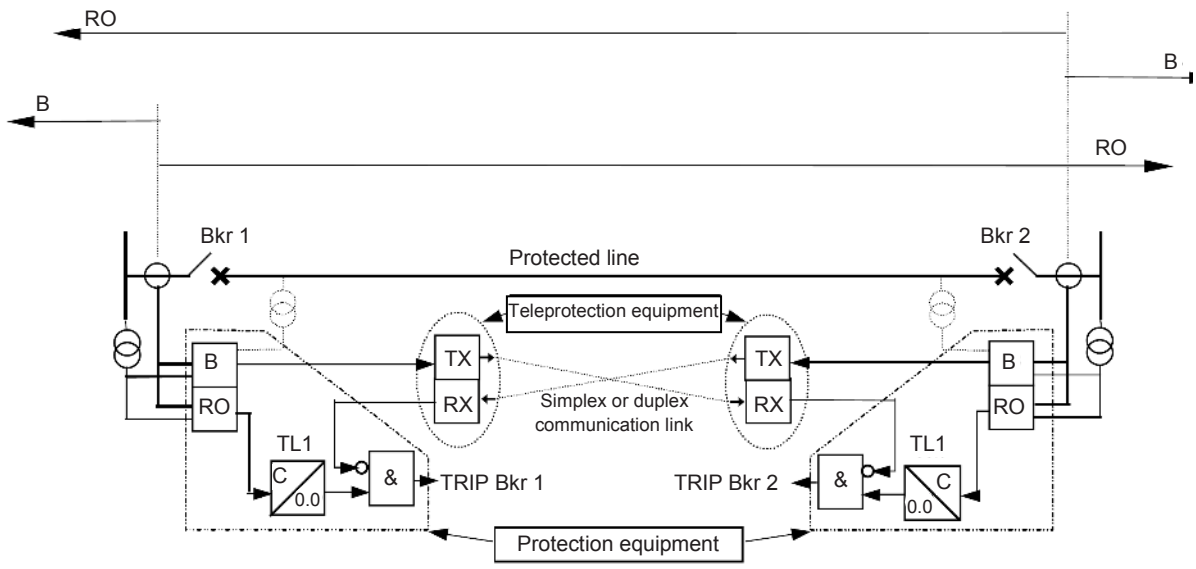

RO Overreaching trip function, must be set to reach beyond remote end of line
B Blocking function, must be set to reach beyond overreaching trip function at remote end of line
C Coordinating time, required to allow time for blocking signal to be received (set equal to channel time plus propogation time plus margin)

IEC 504/10

Figure 2 – Distance line protection with blocking tele-protection scheme [1]

Constraints / Assumptions / Design considerations:

- The blocking signal is a minimum of 1 bit. If it is phase segregated signal, it needs 3 bits. If it is phase segregated, and phase-to-phase and phase-to-earth are independent, the signal needs 6 bits. Directional earth fault detection may need another 1 bit.
- Data is sent when a reverse fault is detected or as a variant, when any fault is detected. In that variant, the blocking signal is removed when the fault direction is detected as forward.
- For communication channel failure, the blocking signal is typically removed.
- For fast tripping, the propagation delay shall be small (e.g.: less than 5 ms).
- A high reliability is needed (e.g. BER less than 10^{-6}, alternative route, duplicated).

Documents
Document Sharing Hub

Full document details: PD IEC/TR 61850-90-1:2010

Use case diagram:

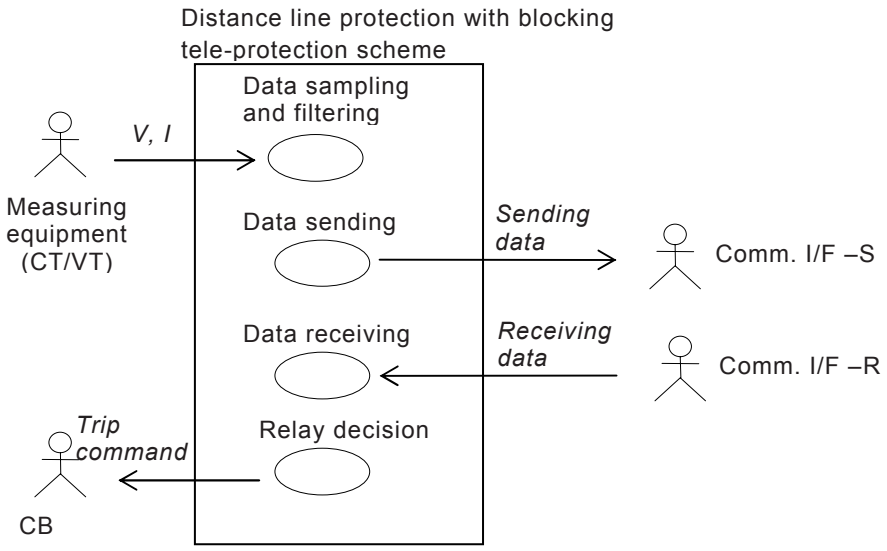

Actor(s):

Name	Role description
Measuring equipment	Measures current and voltage from the protected line
Comm. I/F –S	Receives data from the local relay and sends the data to the remote end
Comm. I/F –R	Receives data from the remote end and gives the data to the local relay
CB	Disconnects the protected line from the other system (circuit breaker)

Use case(s):

Name	Services or information provided
Data sampling and filtering	Samples current and voltage data from the measuring equipment and filters them
Data sending	Calculates a distance to the fault using filtered data. When a distance protection detects a reverse fault, the distance protection sends the blocking signal to Comm. I/F –S (the remote end)
Data receiving	Receives the blocking signal from Comm. I/F –R (the remote end)
Relay decision	When the distance protection detects the forward faults, and does not receive a blocking signal from the remote end, the distance protection issues a trip command to the CB

Basic flow:

Data sampling and filtering

Use case step	Description
Step 1	Current and voltage are given to distance protection by the measuring equipment
Step 2	Distance protection samples an analogue value, and converts it to digital data
Step 3	Distance protection removes the unwanted frequency component from the sampled data using a digital filter

Documents
Document Sharing Hub
Full document details: PD IEC/TR 61850-90-1:2010

Data sending

Use case step	Description
Step 1	Distance protection stores the filtered instantaneous data
Step 2	Distance protection calculates a distance to the fault using filtered data
Step 3	When a distance protection detects a reverse fault in a pre-determined distance, it sends a blocking signal to Comm. I/F –S (in order to send the data to a remote end relay)
Step 4	Comm. I/F –S sends the information to remote end

Data receiving

Relay decision

Use case step	Description
Step 1	When the distance protection detects a forward fault in a predetermined zone, and does not receive a blocking signal from the remote end, the distance protection issues a trip command to the CB

Exceptions / Alternate flow:

N.A.

Pre-conditions:

N.A.

Post-conditions:

N.A.

References:

[1] Protection Using Telecommunication

5.4 Directional comparison protection

Summary:

When a directional relay (typically a directional overcurrent relay) detects a forward fault, the relay sends a permissive signal to the remote end. If the relay also receives a permissive signal from the remote end, the relay sends a trip signal to the local CB. See Figure 3.

Documents
Document Sharing Hub

Full document details: PD IEC/TR 61850-90-1:2010

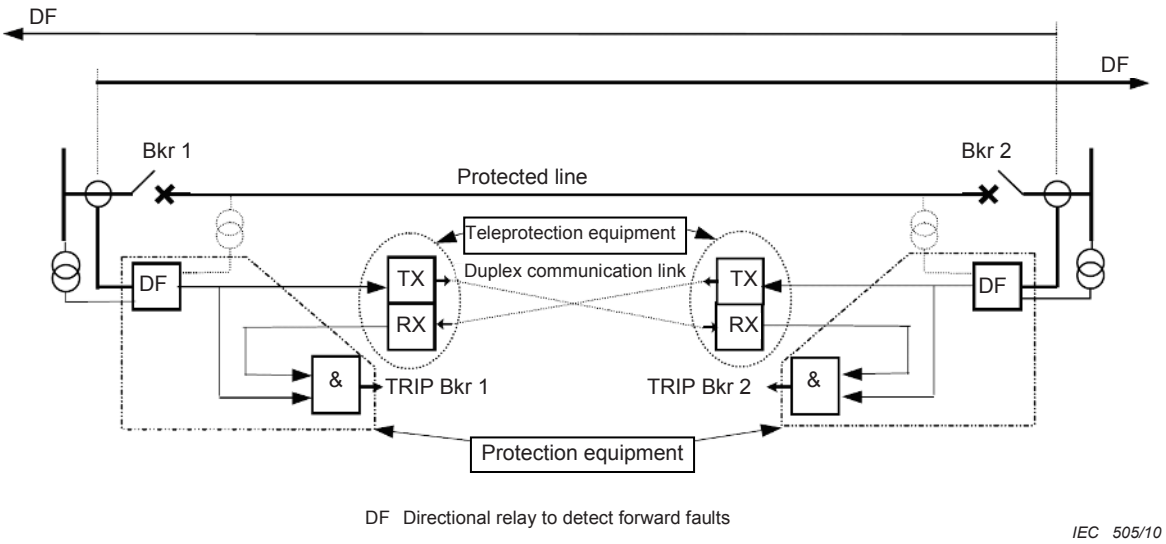

Figure 3 – Directional comparison with permissive scheme [1]

Constraints / Assumptions / Design considerations:

- The permissive signal is a minimum of 1 bit. If it is phase segregated signal, it needs 3 bits. If it is phase segregated and phase-to-phase and phase-to-earth are independent, the signal needs 6 bits. Directional earth fault detection may need another 1 bit.
- Data is sent only when a forward fault is detected.
- For communication channel failure, alternative actions must be considered.
- For fast tripping, the propagation delay shall be small (e.g.: less than 5 ms).
- A high reliability is needed (e.g. BER less than 10^{-6}, alternative route, duplicated).

Use case diagram:

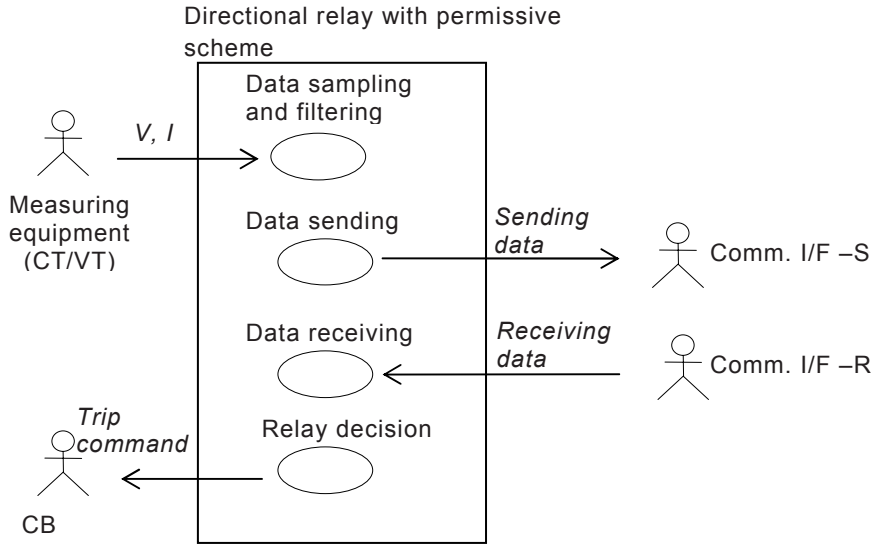

Documents
Document Sharing Hub
Full document details: PD IEC/TR 61850-90-1:2010

Actor(s):

Name	Role description
Measuring equipment	Measures current and voltage from a protected line
Comm. I/F –S	Receives data from the local relay and sends the data to the remote end
Comm. I/F –R	Receives data from the remote end and gives the data to the local relay
CB	Disconnects the protected line from another system (circuit breaker)

Use case(s):

Name	Services or information provided
Data sampling and filtering	Samples current and voltage data from the measuring equipment, and filters them
Data sending	Calculates the direction of the fault. When a directional relay detects a forward fault, the relay sends a permissive signal to Comm. I/F –S (the remote end)
Data receiving	Receives the permissive signal from Comm. I/F –R (the remote end)
Relay decision	When the directional relay detects a forward fault and receives a permissive signal from remote end, the directional relay issues a trip command to the CB

Basic flow:

Data sampling and filtering

Use case step	Description
Step 1	Current and voltage are given to directional relay by the measuring equipment
Step 2	Directional relay samples an analogue value and converts it to digital data
Step 3	Directional relay removes the unwanted frequency components from the sampled data using a digital filter

Data sending

Use case step	Description
Step 1	Directional relay stores the filtered instantaneous data
Step 2	Directional relay calculates a direction of the fault using filtered data
Step 3	When a directional relay detects a forward fault, the relay sends the permissive signal to Comm. I/F –S (in order to send the data to the remote end relay)
Step 4	Comm. I/F –S sends the information to remote end

Data receiving

Use case step	Description
Step 1	Comm. I/F –R receives the data from the remote end
Step 2	Comm. I/F –R gives the received data to the directional relay
Step 3	Directional relay receives the data

Relay decision

Use case step	Description
Step 1	When the directional relay detects a forward fault and receives a permissive signal from the remote end, the relay issues a trip command to the CB

Exceptions / Alternate flow:

N.A.

Documents
Document Sharing Hub

Full document details: PD IEC/TR 61850-90-1:2010

Pre-conditions:
N.A.

Post-conditions:
N.A.

References:
[1] Protection Using Telecommunication

5.5 Transfer/Direct tripping

Summary:
Local equipment sends a trip command to the remote equipment. This function is sometimes called inter-tripping as well. See Figure 4.

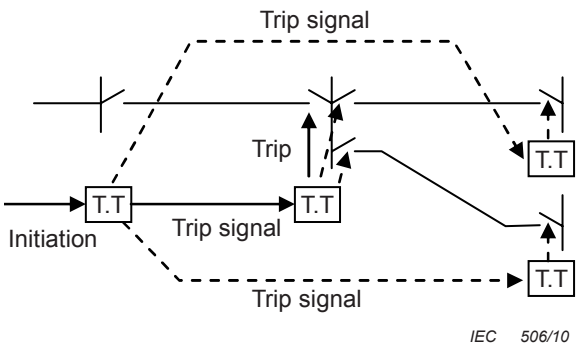

Figure 4 – Transfer/Direct tripping

Constraints / Assumptions / Design considerations:
- The trip signal is a minimum of 1 bit. If it is phase segregated signal it is 3 bits. If the quantity of remote equipments is more than one, more bits may be needed for the signal.
- Data is sent only if a trip command is issued.
- For communication channel failure, alternative actions must be considered.
- For fast tripping, the propagation delay shall be small (e.g.: less than 5 ms).
- A high reliability is needed (e.g. BER less than 10^{-6}, alternative route, duplicated).

Use case diagram:

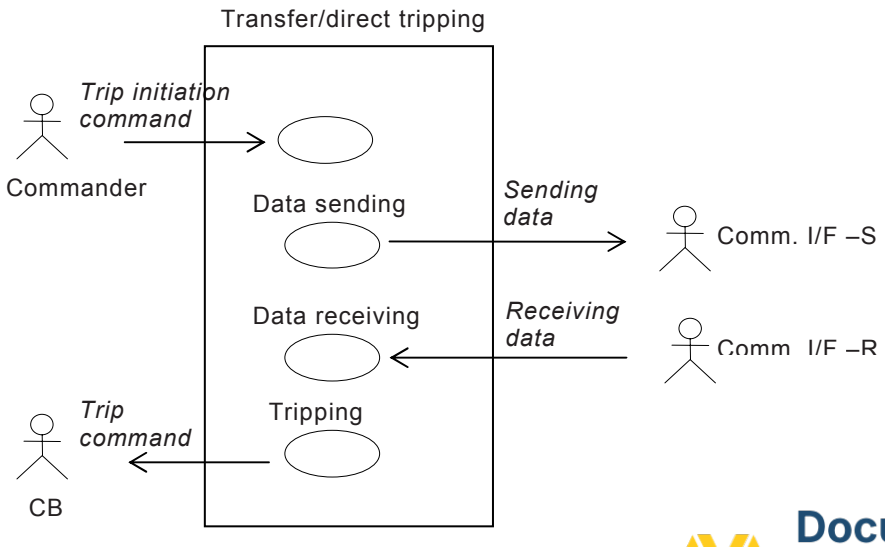

Documents
Document Sharing Hub
Full document details: PD IEC/TR 61850-90-1:2010

Actor(s):

Name	Role description
Commander	Requests local equipment to send a trip command to the remote equipment
Comm. I/F –S	Receives data from the local relay and sends the data to the remote end
Comm. I/F –R	Receives data from the remote end and gives the data to the local relay
CB	Disconnects the line from the other system (circuit breaker)

Use case(s):

Name	Services or information provided
Trip command issuing	Issues a trip command to the local equipment
Data sending	Sends the trip command to Comm. I/F –S (the remote end)
Data receiving	Receives the trip command from Comm. I/F –R
Tripping	Issues the trip command to the CB

Basic flow:

Trip command issuing

Use case step	Description
Step 1	Issues the trip command to local equipment
Step 2	Local equipment receives the trip command

Data sending

Use case step	Description
Step 1	Local equipment sends the trip command to Comm. I/F –S (in order to send the data to the remote equipment)
Step 2	Comm. I/F –S sends the information to the remote end

Data receiving

Use case step	Description
Step 1	Comm. I/F –R gives the received command to the remote equipment
Step 2	Remote equipment receives the data

Tripping

Use case step	Description
Step 1	Remote equipment issues a trip command to the CB

Exceptions / Alternate flow:

N.A.

Pre-conditions:

N.A.

Post-conditions:

N.A.

References:

N.A.

Documents
Document Sharing Hub

Full document details: PD IEC/TR 61850-90-1:2010

5.6 Interlocking

Summary:

The interlocking of the line earth switch depends on whether there is voltage on the line or not. To be able to detect this, the states of the earthing switch, and the line disconnector switch of the other line side, should be transferred and used. The method of under-voltage measurement may still be considered as back-up functionality in case of losing the communication link. See Figure 5.

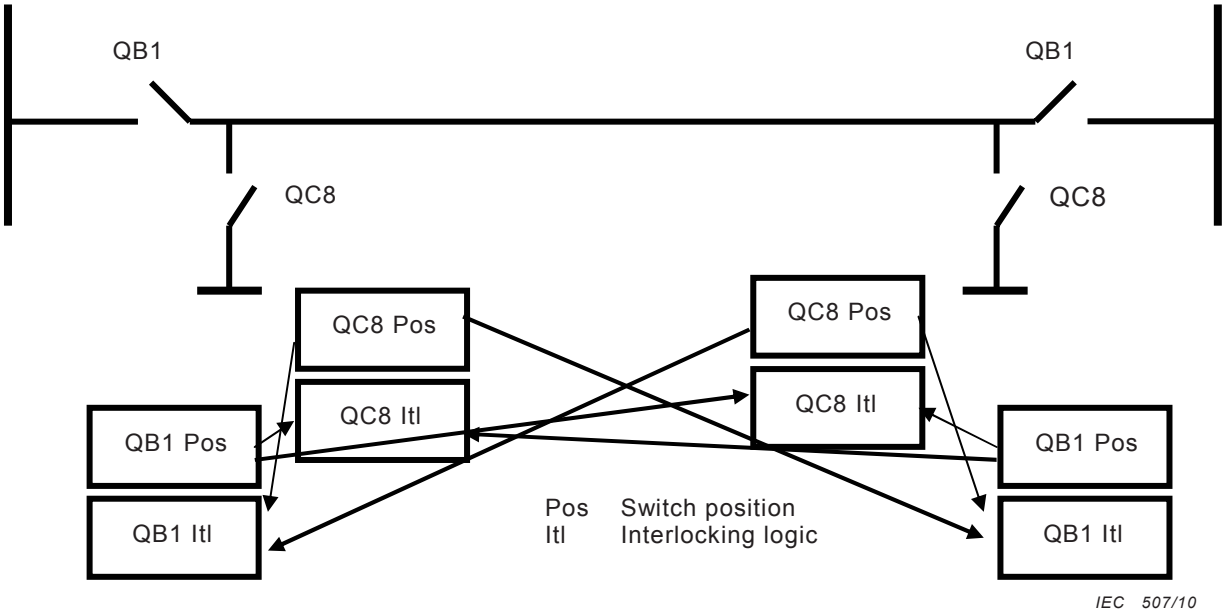

Figure 5 – Interlocking – Interoperation

Constraints / Assumptions / Design considerations:

- Timing requirements: ≤ 100 ms.
- Frequency of use: each switch state change is sent.
- Sizing characteristics: two switch states (maximum: all switch states of the other side, i.e. around 10 switch states).
- Communication channel failure can be considered as intermediate or failed switch state.

Documents
Document Sharing Hub
Full document details: PD IEC/TR 61850-90-1:2010

Use case diagram:

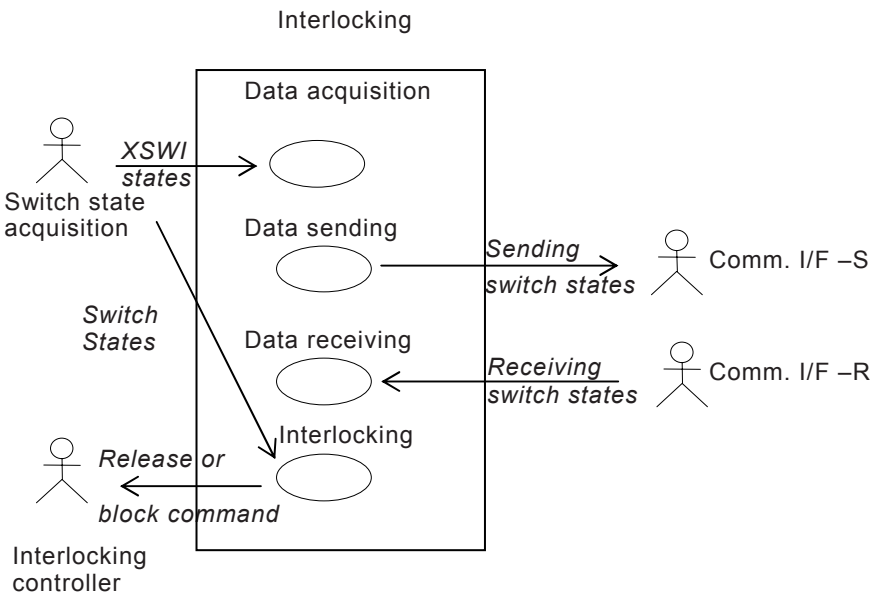

Actor(s):

Name	Role description
Switch state acquisition	Switch states from line, at least earth switch and line disconnector
Comm. I/F –S	Receives data from the local acquisition, and sends the data to the remote end
Comm. I/F –R	Receives data from the remote end and gives the data to the local interlocking controller
Interlocking controller	Uses remote switch states for local interlocking logic

Use case(s):

Name	Services or information provided
Switch state acquisition	Acquires switch states from the line, at least the earth switch and the line disconnector
Data sending	Receives data from the local acquisition, and sends the data to the remote end
Data receiving	Receives data from the remote end, and gives the data to the local interlocking controller
Interlocking calculation	Uses remote switch states for local interlocking logic

Basic flow:

Use case step	Description
Step 1	Acquires switch states from the line, at least earth the switch and the line disconnector
Step 2	Receives data from the local acquisition and sends the data to the remote end
Step 3	Receives data from the remote end and gives the data to the local interlocking controller
Step 4	Uses the remote switch states for local interlocking logic

Documents
Document Sharing Hub
Full document details: PD IEC/TR 61850-90-1:2010

Exceptions / Alternate flow:
N.A.

Pre-conditions:
None.

Post-conditions:
Correct interlocking – no line disconnector closes on earthed line, no earthing switch closes on active (disconnector closed) line.

References:
None

5.7 Multi-phase auto-reclosing application for parallel line systems

Summary:
Multi-phase auto-reclosing (1-phase, 2-phase, 3-phase) is a scheme that is applied to the double line circuit. In multi-phase auto-reclosing applications, the scheme decides its actions based on CB status of the remote end (not usually used for other auto-reclosing methods).

This use case focuses on how to use or how to transmit CB status information for multi-phase auto-reclosing. Normal auto-reclosing processes (e.g. checking dead time etc.) are omitted in the explanation. See Figure 6.

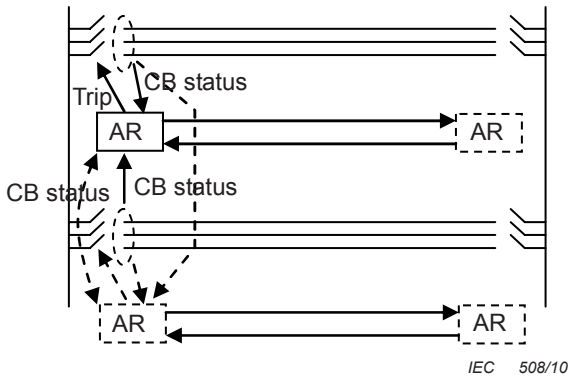

Figure 6 – Auto-reclosing

Constraints / Assumptions / Design considerations:
- The CB status needs 3 bits or 6 bits.
- Small propagation delay is preferred for quick operation (e.g.: 10 ms).
- A high reliability is needed.
- For communication channel failure, alternative actions must be considered.

Documents
Document Sharing Hub
Full document details: PD IEC/TR 61850-90-1:2010

Use case diagram:

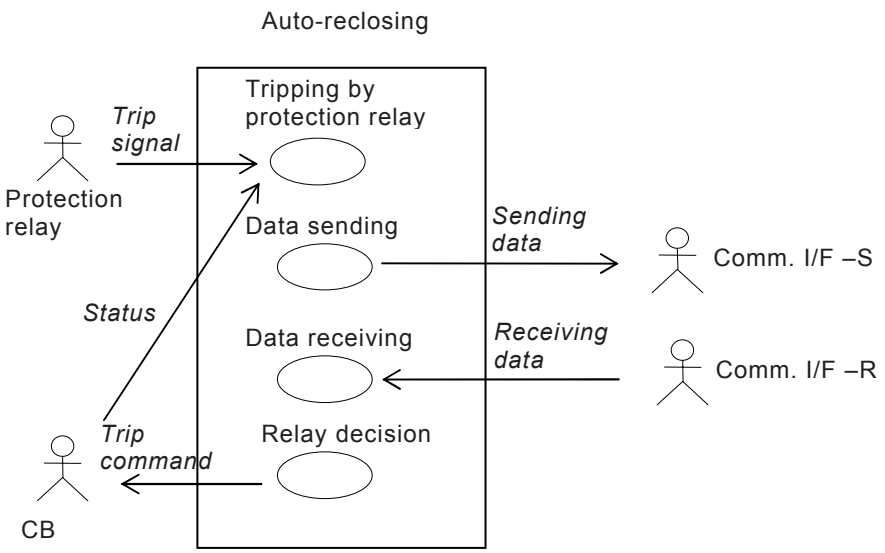

Actor(s):

Name	Role description
Protection relay	Gives the tripping information to the auto-reclosing scheme
Comm. I/F –S	Receives data from the local relay and sends the data to the remote end
Comm. I/F –R	Receives data from the remote end and gives the data to the local relay
CB	Disconnects the protected line from another system (circuit breaker)

Use case(s):

Name	Services or information provided
Tripping by protection relay	Protection relay trips faulted phase, and gives that information to the auto-reclosing scheme Local CBs in protected line and in the parallel line give their status to the auto-reclosing scheme
Data sending	Sends the local CB status to Comm. I/F–S
Data receiving	Receives the remote CB status from Comm. I/F –R
Relay decision	If the auto-reclosing scheme decides to trip other phases, it sends a trip signal to the local CB

Basic flow:

Data sending

Use case step	Description
Step 1	Auto-reclosing scheme sends the local CB status to Comm. I/F –S (in order to send the data to the remote end relay). Auto-reclosing scheme also passes the information to the auto-reclosing scheme of the parallel line to share the information
Step 2	Comm. I/F –S sends the information to the remote end

Data receiving

Use case step	Description
Step 1	Comm. I/F –R give the received data to auto-reclosing scheme
Step 2	Auto-reclosing scheme receives the data from comm. I/F–R and from the auto-reclosing scheme of the parallel line

AVA Documents
Document Sharing Hub
Full document details: PD IEC/TR 61850-90-1:2010

Tripping by protection relay

Use case step	Description
Step 1	If a fault occurs in the protected line, a protection relay trips the faulted phase and gives the trigger to start the auto-reclosing scheme to the auto-reclosing scheme of the protected line and of the other line located in the local substation
Step 2	Auto-reclosing scheme receives the data

Relay decision

Use case step	Description
Step 1	By using the CB status of both ends of both lines, the auto-reclosing scheme checks which phases are alive. The auto-reclosing scheme decides whether other phases must be tripped, or if the relay just continues to count up dead time by comparing the auto-reclosing conditions with the information of alive phases (*1)
Step 2	If the auto-reclosing scheme decides to trip other phases, it sends a trip signal to the local CB

(*1) More details are explained in the reference [1].

Exceptions / Alternate flow:
N.A.

Pre-conditions:
N.A.

Post-conditions:
N.A.

References:
[2] K.KASUGA, Y.SONOBE, “Multi-phase Autoreclose Function Installed in Line Differential Relay”, 61st Annual Georgia Tech Protective Relaying Conference, May 2-4, 2007, Atlanta, Georgia.

5.8 Current differential line protection

Summary:
Current differential relays measure the current of the protected line at both ends. A local relay sends the current data (I_A) to the remote end and receives the current data from the remote end (I_B). Current differential relays detect faults in the protected line (internal faults) by comparing the current from the remote relay with the current of the local terminal. When current differential relays detect an internal fault, they send a trip signal to the local circuit breaker. See Figure 7.

Documents
Document Sharing Hub
Full document details: PD IEC/TR 61850-90-1:2010