PUBLISHED DOCUMENT

PD IEC/TR 61967-4-1:2005

Integrated circuits — Measurement of electromagnetic emissions, 150 kHz to 1 GHz

Part 4-1: Measurement of conducted emissions — 1 Ω/150 Ω direct coupling method — Application guidance to IEC 61967-4

ICS 31.200

NO COPYING WITHOUT BSI PERMISSION EXCEPT AS PERMITTED BY COPYRIGHT LAW

British Standards

Full document details: PD IEC/TR 61967-4-1:2005

National foreword

This Published Document reproduces verbatim IEC/TR 61967-4-1:2005.

The UK participation in its preparation was entrusted to Technical Committee EPL/47, Semiconductors, which has the responsibility to:

— aid enquirers to understand the text;

— present to the responsible international/European committee any enquiries on the interpretation, or proposals for change, and keep UK interests informed;

— monitor related international and European developments and promulgate them in the UK.

A list of organizations represented on this committee can be obtained on request to its secretary.

Cross-references

The British Standards which implement international publications referred to in this document may be found in the *BSI Catalogue* under the section entitled "International Standards Correspondence Index", or by using the "Search" facility of the *BSI Electronic Catalogue* or of British Standards Online.

This publication does not purport to include all the necessary provisions of a contract. Users are responsible for its correct application.

Compliance with a Published Document does not of itself confer immunity from legal obligations.

Summary of pages

This document comprises a front cover, an inside front cover, the PD IEC/TR title page, pages 2 to 47 and a back cover.

The BSI copyright notice displayed in this document indicates when the document was last issued.

Amendments issued since publication

Amd. No.	Date	Comments

This Published Document was published under the authority of the Standards Policy and Strategy Committee on 30 January 2006

© BSI 30 Jaunary 2006

ISBN 0 580 47472 0

Documents
Document Sharing Hub

Full document details: PD IEC/TR 61967-4-1:2005

TECHNICAL REPORT

IEC TR 61967-4-1

First edition
2005-02

Integrated circuits – Measurement of electromagnetic emissions, 150 kHz to 1 GHz –

Part 4-1: Measurement of conducted emissions – 1 Ω/150 Ω direct coupling method – Application guidance to IEC 61967-4

Reference number
IEC/TR 61967-4-1:2005(E)

Documents
Document Sharing Hub

Full document details: PD IEC/TR 61967-4-1:2005

CONTENTS

FOREWORD....4

1 Scope....6
2 Normative references....6
3 Terms and definitions....7
4 Splitting ICs into *IC function modules*....9
4.1 Background....9
4.2 Benefits....9
4.3 IC function modules....9
4.4 Example matrix for splitting ICs into *IC function modules*....14
5 Workflow to perform IC EMC emission tests....15
5.1 Emission test philosophy....15
5.2 Flowchart of performing emission tests....15
6 Test configurations for *IC function modules*....16
6.1 EMC test recommendations for *IC function modules*....16
6.2 Port selection guide....16
6.3 Test networks at selected ports....18
6.4 Supply selection guide....22
6.5 Test networks at selected supplies....23
6.6 Parameter initialization of *IC function modules* for testing....24
6.7 Test parameter for performing conducted emission measurements....30
7 Test board layout recommendations....36
7.1 Common test board recommendations....36
7.2 150 Ω network on 2 layer and multi layer PCB....36
7.3 1 Ω network on 2 layer and multi-layer PCB....37
8 Test report....37

Annex A (normative) IEC 61967-4 test network modification....38
Annex B (informative) Trace impedance calculation....40
Annex C (informative) Examples for splitting ICs into *IC function modules*....42

Figure 1 – Common definition of an IC function module....8
Figure 2 – Flowchart of performing emission tests....15
Figure 3 – Test network for IC function module *line driver*....18
Figure 4 – *Symmetrical line driver* without termination (not required by bus system datasheet)....18
Figure 5 – *Symmetrical line driver* with termination required by bus system datasheet....19
Figure 6 – Test network for IC function module *line driver*....19
Figure 7 – Test network for IC function module *high side driver*....20
Figure 8 – Test network for IC function module *low side driver*....21
Figure 9 – Conducted emission measurement circuits for IC function module *supply*....23
Figure 10 – Layout recommendation 150 Ω network....36
Figure 11 – Layout recommendation 1 Ω network....37

AVA Documents
Document Sharing Hub

Full document details: PD IEC/TR 61967-4-1:2005

Figure A.1 – 150 Ω network, attenuation chart of some example capacitor values 38
Figure B.1 – Micro stripline 40
Figure B.2 – Symmetric stripline.....41
Figure B.3 – Offset stripline 41

Table 1 – Example matrix for splitting ICs into *IC function modules* 14
Table 2 – EMC test recommendations for *IC function modules*.....16
Table 3 – Test port selection table 17
Table 4 – Creating priority for a subset of *supply* modules.....23
Table 5 – *Driver* toggling definition.....24
Table 6 – Test initialization software module for *cores* containing a *CPU* 27
Table 7 –Test loop software module for *cores* containing a *CPU*.....29
Table 8 – Test procedure *driver switching noise, with CPU*.....30
Table 9 – Test procedure *driver switching noise, without CPU*.....30
Table 10 – Test procedure *port internal crosstalk, with CPU*.....31
Table 11 – Test procedure *regional signal driver* supply noise*, with CPU*.....31
Table 12 – Test procedure *regional signal driver* supply noise*, without CPU*.....31
Table 13 – Test procedure *symmetrical line drivers, with CPU*.....32
Table 14 – Test procedure *symmetrical line drivers, without CPU*.....32
Table 15 –Test procedure *high side drivers (without CPU)*.....32
Table 16 – Test procedure *low side drivers (without CPU)*.....33
Table 17 – Test procedure *core supply, without CPU* 33
Table 18 – Test procedure *core to drivers* and *inputs* crosstalk*, without CPU*.....34
Table 19 – Test procedure *core supply, core with CPU*.....34
Table 20 – Test procedure *core* to *drivers* and *inputs* crosstalk, core with CPU, single *driver* or input port 35
Table 21 – Test procedure *core* to *drivers* and *inputs* crosstalk, with *CPU*, multiple *driver* or *input port*.....35
Table 22 – Test procedure *oscillator* supply noise*, with CPU*.....36
Table 23 – Test procedure *oscillator* supply noise*, without CPU*.....36
Table A.1 – Limit frequencies of modified DC block capacitor values in 150 Ω network 39

Documents
Document Sharing Hub

Full document details: PD IEC/TR 61967-4-1:2005

INTERNATIONAL ELECTROTECHNICAL COMMISSION

INTEGRATED CIRCUITS – MEASUREMENT OF ELECTROMAGNETIC EMISSIONS, 150 kHz TO 1 GHz –

Part 4-1: Measurement of conducted emissions – 1 Ω/150 Ω direct coupling method – Application guidance to IEC 61967-4

FOREWORD

1) The International Electrotechnical Commission (IEC) is a worldwide organization for standardization comprising all national electrotechnical committees (IEC National Committees). The object of IEC is to promote international co-operation on all questions concerning standardization in the electrical and electronic fields. To this end and in addition to other activities, IEC publishes International Standards, Technical Specifications, Technical Reports, Publicly Available Specifications (PAS) and Guides (hereafter referred to as "IEC Publication(s)"). Their preparation is entrusted to technical committees; any IEC National Committee interested in the subject dealt with may participate in this preparatory work. International, governmental and non-governmental organizations liaising with the IEC also participate in this preparation. IEC collaborates closely with the International Organization for Standardization (ISO) in accordance with conditions determined by agreement between the two organizations.
2) The formal decisions or agreements of IEC on technical matters express, as nearly as possible, an international consensus of opinion on the relevant subjects since each technical committee has representation from all interested IEC National Committees.
3) IEC Publications have the form of recommendations for international use and are accepted by IEC National Committees in that sense. While all reasonable efforts are made to ensure that the technical content of IEC Publications is accurate, IEC cannot be held responsible for the way in which they are used or for any misinterpretation by any end user.
4) In order to promote international uniformity, IEC National Committees undertake to apply IEC Publications transparently to the maximum extent possible in their national and regional publications. Any divergence between any IEC Publication and the corresponding national or regional publication shall be clearly indicated in the latter.
5) IEC provides no marking procedure to indicate its approval and cannot be rendered responsible for any equipment declared to be in conformity with an IEC Publication.
6) All users should ensure that they have the latest edition of this publication.
7) No liability shall attach to IEC or its directors, employees, servants or agents including individual experts and members of its technical committees and IEC National Committees for any personal injury, property damage or other damage of any nature whatsoever, whether direct or indirect, or for costs (including legal fees) and expenses arising out of the publication, use of, or reliance upon, this IEC Publication or any other IEC Publications.
8) Attention is drawn to the Normative references cited in this publication. Use of the referenced publications is indispensable for the correct application of this publication.
9) Attention is drawn to the possibility that some of the elements of this IEC Publication may be the subject of patent rights. IEC shall not be held responsible for identifying any or all such patent rights.

The main task of IEC technical committees is to prepare International Standards. However, a technical committee may propose the publication of a technical report when it has collected data of a different kind from that which is normally published as an International Standard, for example "state of the art".

IEC 61967-4-1, which is a technical report, has been prepared by subcommittee 47A: Integrated circuits, of IEC technical committee 47: Semiconductor devices.

Documents
Document Sharing Hub

Full document details: PD IEC/TR 61967-4-1:2005

The text of this technical report is based on the following documents:

Enquiry draft	Report on voting
47A/694/DTR	47A/702A/RVC

Full information on the voting for the approval of this technical report can be found in the report on voting indicated in the above table.

This publication has been drafted in accordance with the ISO/IEC Directives, Part 2.

IEC 61967 consists of the following parts, under the general title *Integrated circuits – Measurement of electromagnetic emissions, 150 kHz to 1 GHz*

Part 1 General conditions and definitions

Part 2 Measurement of radiated emissions – TEM-cell method

Part 3 Measurement of radiated emissions – Surface scan method

Part 4 Measurement of conducted emissions – 1 Ω / 150 Ω Direct coupling method

Part 5 Measurement of conducted emissions – Workbench Faraday cage method

Part 6 Measurement of conducted emissions – Magnetic probe method

The committee has decided that the contents of this publication will remain unchanged until the maintenance result date indicated on the IEC web site under "http://webstore.iec.ch" in the data related to the specific publication. At this date, the publication will be

- reconfirmed;
- withdrawn;
- replaced by a revised edition, or
- amended.

A bilingual version of this Technical Report may be issued at a later date.

Documents
Document Sharing Hub

Full document details: PD IEC/TR 61967-4-1:2005

INTEGRATED CIRCUITS – MEASUREMENT OF ELECTROMAGNETIC EMISSIONS, 150 kHz TO 1 GHz –

Part 4-1: Measurement of conducted emissions – 1 Ω/150 Ω direct coupling method – Application guidance to IEC 61967-4

1 Scope

This technical report serves as an application guidance and relates to IEC 61967-4.The division of *IC types* into →*IC function modules* and the software modules for →*cores* with *CPU* can be used for Parts 3, 5 and 6 of IEC 61967 as well. This report gives advice for performing test methods described in IEC 61967-4 by classifying types of integrated circuits (ICs) and providing hints for test applications related to the IC type classification.

To obtain comparable results of IC emission measurements using IEC 61967-4, definitions are given which are in addition to the general conditions specified in IEC 61967-1 and IEC 61967-4. These definitions concern IC related operating modes, pins and →*ports* to be tested, test set-ups according IEC 61967-4, including description of load circuits and RF path, and IC related emission limits (or limit classes). Parts of the guidance provided by this technical report may be applicable to other parts of IEC 61967.

2 Normative references

The following referenced documents are indispensable for the application of this document. For dated references, only the edition cited applies. For undated references, the latest edition of the referenced document (including any amendments) applies.

IEC 60050(101), *International Electrotechnical Vocabulary (IEV) – Part 101: Mathematics*

IEC 60050(161:1990), *International Electrotechnical Vocabulary (IEV) – Part 161: Electromagnetic compatibility*
Amendment 2 (1998)

IEC 61967-1, *Integrated circuits – Measurement of electromagnetic emissions 150 kHz to 1 GHz – Part 1: General conditions and definitions*

IEC 61967-2, *Integrated circuits – Measurement of electromagnetic emissions 150 kHz to 1 GHz – Part 2: Measurement of radiated emissions, TEM-cell method*[1]

IEC 61967-3, *Integrated circuits – Measurement of electromagnetic emissions 150 kHz to 1 GHz – Part 3: Measurement of radiated emissions, surface scan method*[2]

IEC 61967-4, *Integrated circuits – Measurement of electromagnetic emissions 150 kHz to 1 GHz – Part 4: Measurement of conducted emissions – 1 Ω/150 Ω direct coupling method*

---

1 In preparation.

2 To be published.

Documents
Document Sharing Hub

Full document details: PD IEC/TR 61967-4-1:2005

IEC 61967-5, *Integrated circuits - Measurement of electromagnetic emissions, 150 kHz to 1 GHz - Part 5: Measurement of conducted emissions, Workbench Faraday Cage method*

IEC 61967-6, *Integrated circuits – Measurement of electromagnetic emissions, 150 kHz to 1 GHz – Part 6: Measurement of conducted emissions – Magnetic probe method*

ISO 9141, *Road vehicle – Diagnostic systems – Requirements for interchange of digital information*

3 Terms and definitions

For the purposes of this document, the following terms and definitions apply.

3.1
analog
pertaining to the representation of information by means of a physical quantity which may at any instant within a continuous time interval assume any value within a continuous interval of values

NOTE The quantity considered may, for example, follow continuously the values of another physical quantity representing information.

[IEV 101-12-05]

3.2
core
→*IC function module* without any connection outside the IC via pins

NOTE The supply is connected via the *IC function module supply* to pins, signals to pins are connected via the *IC function module driver*.

3.3
common mode (CM) current
in a cable having more than one conductor, including shields and screens, if any, the magnitude of the sum of the phasors representing the currents in each conductor

[IEV 161-04-39]

3.4
digital
pertaining to the representation of information by distinct states or discrete values

[IEV 101-12-07]

3.5
differential mode (DM) current
in a two-conductor cable, or for two particular conductors in a multi-conductor cable, half the magnitude of the difference of the phasors representing the currents in each conductor

[IEV 161-04-38]

3.6
EMC pin type

3.6.1
global pin
signal carrier which comes from or leaves the application via a cable harness

NOTE The cable harness is an antenna for RF energy.

In general, there are series impedances (discrete components, PCB traces) and capacitances to an application's ground system in between the cable harness and the IC pin to reduce the IC pin's RF emission.

Documents
Document Sharing Hub

Full document details: PD IEC/TR 61967-4-1:2005

3.6.2
local pin
signal carrier which does not leave the application via a cable harness

NOTE 1 It remains on the application PCB as a signal between two components with or without additional EMC components.

NOTE 2 In general, the PCB traces of these signals are as short as possible. Such a trace and the loop of the signal current is a smaller antenna for RF energy in comparison to the cable harness, so the ability of the antenna to radiate RF energy is smaller.

3.7
fixed function unit
FFU
functional core sub-unit of the →*IC function module 'Core'*, designed to perform one fixed function without instruction decode and execute capability

3.8
integrated circuit
IC
set of implemented →*IC function modules* in one die or package

3.9
IC type
IC with a characteristic set of functions built in

NOTE These functions are realized with →*IC function modules.*

3.10
IC function module
functional part of an IC with at least one function and its supply connection, if needed

3.10.1
passive IC function module
no supply system for function

3.10.2
active IC function module
dedicated supply connection needed for function
NOTE The supply connection is handled as a separate input/output pair as it has a dedicated EMC behavior.

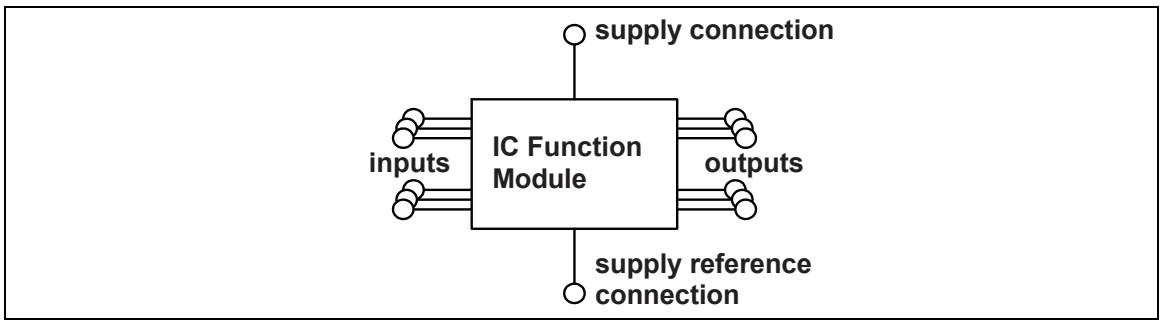

Figure 1 – Common definition of an IC function module

3.11
printed circuit board
PCB
piece of isolating material with fixed metal traces to connect electronic components

Documents
Document Sharing Hub
Full document details: PD IEC/TR 61967-4-1:2005

3.12
port
functional set of minimum one *Driver* and/or minimum one *Input*

NOTE It is physically related to one →fixed function unit (FFU, see IC function module core). It is very useful to define this functional set of input and/or output IC function modules to get a common description of an interface between an IC and its circuit environment.

3.13
active port
port switched to a defined configuration or connected to *a →fixed function* unit and controlled during EMC measurements

3.14
inactive port
port switched to a defined configuration or connected to *a →fixed function* unit and remains in a defined static mode

3.15
test port
port selected for IC EMC tests

3.16
supply pin pairs
all supply voltage pins of the same supply voltage system with their related ground pin(s) of an IC supply module

4 Splitting ICs into *IC function modules*

4.1 Background

The functionality of an IC pin can be characterized as an *IC function module*. The defined set of *IC function modules* is sufficient to be combined to every kind of IC on the market. The advantage of this set of *IC function modules* is that it provides a description of EMC test set-ups and emission limit levels for each single *IC function module* with its characteristic EMC behaviour.

4.2 Benefits

– The number of test circuits is equivalent to the number of *IC function modules* independent from all IC types currently existing and future IC types (for examples for dividing actual IC types into IC function modules, see Annex C).
– The test circuit for each *IC function module* can be described precisely.
– Emission limits can be defined for each *IC function module*[3].

4.3 IC function modules

4.3.1 Port

The port is an interface between an IC and its circuit environment.

[3] Limit definitions are not the target of IEC standardization. Limits have to be defined by the specific user groups, depending on application of EMC requirements in the business field concerned.

AVA Documents
Document Sharing Hub

IC function modules comprising a set of at least one *IC function module 'Driver'* and/or one *IC function module 'Input'* are called *'port modules'.* If there is no driver implemented in the port or only 'local pin' defined *drivers* are implemented, the *port* is referred to as a 'local pin' type port. If 'global pin' defined *drivers* are implemented, the *port* is referred to as a 'global pin' port.

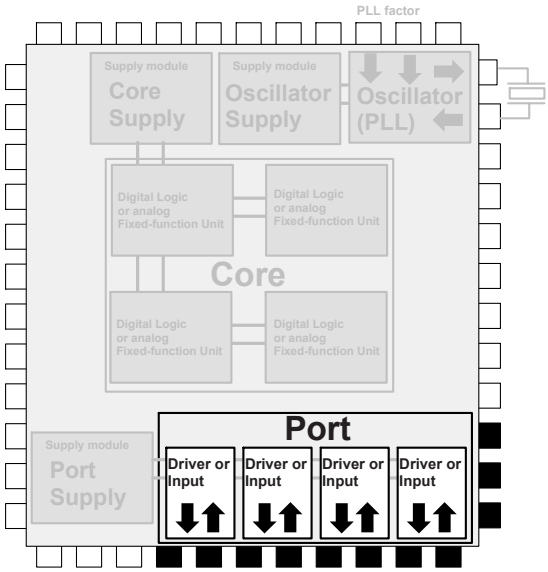

The *Port* can be a combination of eight kinds of *port modules*:

4.3.1.1 Line driver — EMC pin type: 'global'

Drives signals into cables (signals leaving application to cable harness).

Examples: ISO 9141 outputs, LIN outputs.

4.3.1.2 Line receiver — EMC pin type: 'global'

Receives signals from cables (signals get into application from cable harness).

Examples: ISO 9141 inputs, LIN inputs.

4.3.1.3 Symmetrical line driver — *EMC pin type: 'global'*

Drives differential signals into cables with two phase-correlated outputs (signals leaving application to cable harness).

Examples: CAN outputs, LVDS outputs.

4.3.1.4 Symmetrical line receiver — *EMC pin type: 'global'*

Receives differential signals from cables with two phase-correlated inputs cables (signals get into application from cable harness).

Examples: CAN inputs, LVDS inputs.

4.3.1.5 Regional signal driver — *EMC pin type: 'local'*

Drives signals into all other kind of lines than cables not leaving the application (application local signals).

Documents
Document Sharing Hub
Full document details: PD IEC/TR 61967-4-1:2005

Examples: Digital signals: →*Ports* with inputs and outputs in 'Output mode', serial data outputs, clock outputs, status signal outputs.

Analog signals: operational amplifier outputs.

4.3.1.6 Regional Input — EMC pin type: 'local'

Receives signals with any or discrete voltage level from all kinds of lines other than cables leaving the applications (local signals on application PCB).

Examples: Digital signals: →*Ports* with input and output modules in 'Input mode', serial data inputs, clock inputs, status signal inputs (not related to other IC function modules), interrupt inputs.

Analog signals: Input stages of operational amplifiers, input stages of ADCs.

4.3.1.7 High side driver — EMC pin type: 'global' or 'local'

Drives power into loads. The current flows out of the driver. If driver and load are on same application PCB, the EMC pin type of the driver is 'local', if it is separated by a cable harness, the EMC pin type of the driver is 'global'.

Examples: High side switch, switched power supply current output (step down converter).

4.3.1.8 Low side driver — EMC pin type: 'global' or 'local'

Drives power into loads. The current flows into the driver. If driver and load is on same application PCB, the EMC pin type of the driver is 'local', if it is separated by a cable harness, the EMC pin type of the driver is 'global'.

Examples: Low side switch, switched power supply current input (step up converter).

4.3.2 Supply

Distributes supply current to at least one IC function module.

An IC function module with at least one current input pin of same supply system and minimum one current output pin. It may contain active elements like voltage stabilization and/or passive elements such as internal charge buffering, current limiting series elements and other kinds of EMC filtering.

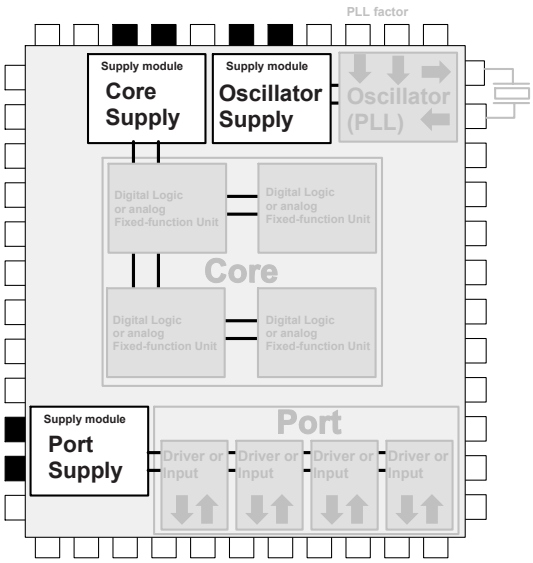

Documents
Document Sharing Hub

4.3.3 Core

A core is an IC function module without any connection outside of the IC via pins.

NOTE The supply is connected via the *IC function module supply* to pins. It contains a set of minimum one IC function sub-module as described below.

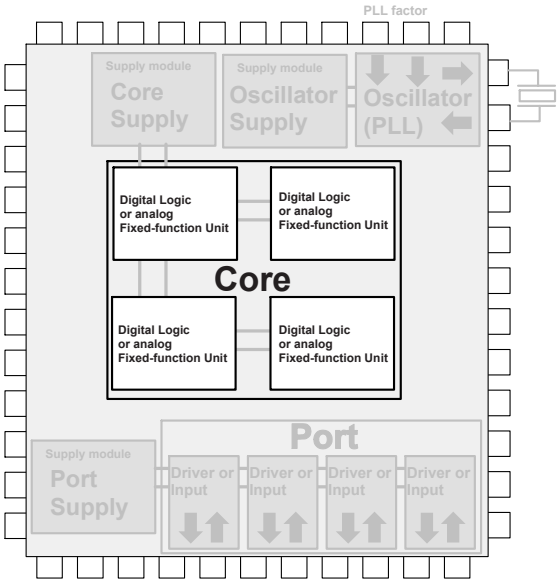

The core can be divided into two kinds of sub-modules:

4.3.3.1 Central processing unit (CPU)

A *CPU* decodes and executes instructions, can make decisions and jump to a new set of instructions based on those decisions.

Sub-units within the *CPU* decode and execute instructions (Sub-Unit *CU (Control Unit)*) and perform arithmetic and logical operations (Sub-Unit *ALU (Arithmetic/Logic Unit)*), making use of small number-holding areas called *registers*.

4.3.3.2 Fixed function unit (FFU)

Functional core sub-unit -> IC function module ‘Core’, designed to perform one analog, digital, or mixed-signal fixed function without instruction decode and execute capability

4.3.3.2.1 Digital logic fixed function unit

Functional core sub-unit, designed to perform one fixed core digital logic function without instruction decode and execute capability.

Examples: Clock distribution, Memory logic and arrays, Registers, Timer, Watchdog Timer, State Machines, Programmable Logic Arrays (PLA).

4.3.3.2.2 Analog fixed function unit

Functional core analog sub-unit, clocked or unclocked, designed to perform one fixed core analog function without instruction decode and execute capability.

Examples: Analog-to-digital-converter (ADC), Digital-to-analog-converter (DAC), Sample-and-hold-circuits, Switched capacitor filter, Charge Coupled Devices (CCDs).

Documents
Document Sharing Hub
Full document details: PD IEC/TR 61967-4-1:2005

Dedicated analog fixed function unit: sensor element

A sensor element is a converter of an environmental value into an electrical value and therefore a FFU.

Examples: Hall sensor element for magnetic field sensing, E-field sensing, acceleration sensing. It can be combined with a precision amplifier (FFU), a supply module and a line driver to realize an IC type "sensor".

4.3.4 Oscillator

Generates a periodic signal.

NOTE This IC function module is a combination of *a fixed function module* of the *core* with *regional drivers* and *regional inputs*, but because of its EMC behaviour, it is dedicated to be defined as a separate IC function module.

A fixed-frequency oscillator may be part of a phase locked loop (PLL) circuit with voltage controlled oscillator (VCO), low pass filter, frequency divider and phase detection. All pins related to these circuits (for example divider, digital logic input pins) are part of this IC function module.

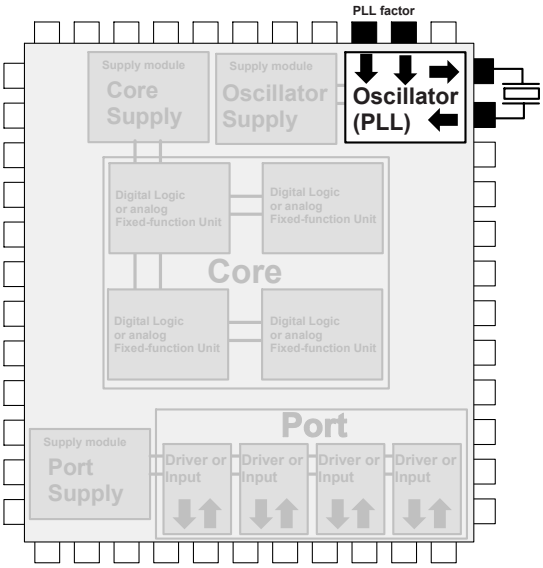

Documents
Document Sharing Hub
Full document details: PD IEC/TR 61967-4-1:2005