PD IEC/TR 62905:2018

BSI Standards Publication

Exposure assessment methods for wireless power transfer systems

Documents
Document Sharing Hub

Full document details: PD IEC/TR 62905:2018

National foreword

This Published Document is the UK implementation of IEC TR 62905:2018.

The UK participation in its preparation was entrusted to Technical Committee GEL/106, Human exposure to low frequency and high frequency electromagnetic radiation.

A list of organizations represented on this committee can be obtained on request to its secretary.

This publication does not purport to include all the necessary provisions of a contract. Users are responsible for its correct application.

© The British Standards Institution 2018
Published by BSI Standards Limited 2018

ISBN 978 0 580 51319 0

ICS 17.220.20

Compliance with a British Standard cannot confer immunity from legal obligations.

This Published Document was published under the authority of the Standards Policy and Strategy Committee on 31 May 2018.

Amendments/corrigenda issued since publication

Date	Text affected

Documents
Document Sharing Hub

Full document details: PD IEC/TR 62905:2018

IEC TR 62905

Edition 1.0 2018-02

TECHNICAL REPORT

colour inside

Exposure assessment methods for wireless power transfer systems

INTERNATIONAL
ELECTROTECHNICAL
COMMISSION

ICS 17.220.20

ISBN 978-2-8322-5350-2

Warning! Make sure that you obtained this publication from an authorized distributor.

® Registered trademark of the International Electrotechnical Commission

Documents
Document Sharing Hub

Full document details: PD IEC/TR 62905:2018

CONTENTS

FOREWORD 7
INTRODUCTION 9
1 Scope 10
2 Normative references 10
3 Terms and definitions 10
4 Symbols and abbreviations 12
4.1 Physical quantities 12
4.2 Constants 12
4.3 Abbreviations 12
5 Overview of WPT systems 13
5.1 General 13
5.2 WPT systems whose frequency range is less than 100 kHz 13
5.3 WPT systems whose frequency range is from 100 kHz to 10 MHz 17
6 Basic assessment methods 20
6.1 General 20
6.2 Basic assessment methods considering direct effect 20
6.2.1 General 20
6.2.2 Evaluation based on transmit power or current 21
6.2.3 Evaluation of incident fields against reference levels 21
6.2.4 Evaluation of incident fields against basic restrictions 21
6.2.5 Evaluation of induced E-field and SAR against basic restrictions 22
6.2.6 Assessment procedure 23
6.3 Basic assessment method considering indirect effect 23
Annex A (informative) WPT systems whose frequency range is over 10 MHz 25
Annex B (informative) International exposure guidelines 27
B.1 ICNIRP guidelines 27
B.2 IEEE standards 30
Annex C (informative) Assessment methods 33
C.1 Exclusion based on transmit power or current 33
C.2 Measurement of incident electromagnetic fields 34
C.2.1 Equipment for electric field measurement 34
C.2.2 Equipment for magnetic field measurement 34
C.2.3 Measurement method 35
C.3 Coupling factor 36
C.4 Generic gradient source model 37
C.5 Induced E-field or SAR 40
C.5.1 Measurement 40
C.5.2 Calculation 41
C.6 Contact current 43
C.6.1 Equipment 43
C.6.2 Measurements 45
Annex D (informative) Case studies 46
D.1 WPT system for EV 46
D.1.1 General 46
D.1.2 Assessment procedures for WPT system for EV 47
D.2 Experimental assessment results for EV 58

AVA Documents
Document Sharing Hub

D.2.1 General ... 58
D.2.2 Electromagnetic field measurement results ... 58
D.2.3 Contact current measurement ... 60
D.3 WPT system for mobile devices ... 61
D.3.1 General ... 61
D.3.2 Assessment procedures for WPT system for mobile ... 62
Annex E (informative) Numerical and experimental studies ... 64
E.1 Exposure evaluation of WPT for EV ... 64
E.1.1 Research in Japan ... 64
E.1.2 Research in Korea ... 68
E.2 Exposure evaluation of WPT for mobile device ... 72
E.2.1 WPT system in 140 kHz band ... 72
E.2.2 WPT systems in MHz band ... 74
E.3 Coupling factor ... 79
E.3.1 WPT system for EV ... 79
E.3.2 WPT system for mobile device ... 82
E.3.3 Evaluation example of CF and GGSM using a cylinder model ... 83
E.4 SAR measurement ... 87
E.5 Contact current ... 89
E.5.1 WPT system for EV ... 89
E.5.2 WPT systems for mobile (MHz) ... 90
Annex F (informative) Medical implants ... 92
F.1 Background ... 92
F.2 Medical implant enhancement factor ... 92
F.3 Numerical evaluation of medical implant enhancement factor ... 97
F.3.1 General ... 97
F.3.2 Numerical setup ... 97
Bibliography ... 99

Figure 1 – Wireless power kitchen appliances [1] ... 13
(WPT kitchen island of apartment) ... 14
Figure 2 – Use cases of the LCD and semiconductor product lines and kitchen WPT systems [1] ... 14
Figure 3 – Example of a WPT system for EV/PHEV [1] ... 15
Figure 4 – Example of an online electric vehicle [1] ... 16
Figure 5 – Technical characteristics of an online electric vehicle [1] ... 16
Figure 6 – Example magnetic induction WPT system block diagram [1] ... 18
Figure 7 – Example magnetic resonance WPT system block diagram [1] ... 18
Figure 8 – Capacitive coupling WPT system block diagram [1] ... 19
Figure 9 – Typical structure of the capacitive coupling system [1] ... 19
Figure 10 – Flowchart of assessment procedure considering the direct effect ... 23
Figure 11 – Two exposure situations for ungrounded and grounded metal objects ... 24
Figure 12 – Flowchart of assessment procedures for indirect effects ... 24
Figure C.1 – Frequency characteristics of impedance of adult male and IEC equivalent circuit ... 44
Figure C.2 – IEC equivalent circuit ... 44
Figure C.3 – Example of contact current measurement equipment ... 44

AVA Documents
Document Sharing Hub
Full document details: PD IEC/TR 62905:2018

Figure D.1 – Example for areas of protection, for ground mounted systems [37] 47
Figure D.2 – Area 3 measurement position [37] 48
Figure D.3 – Area 4 measurement position [37] 48
Figure D.4 – Assessment flow of Part 1 51
Figure D.5 – Assessment flow of Part 2 55
Figure D.6 – Assessment flow of Part 3 56
Figure D.7 – Example measurement layout for Area 3 surrounding area of vehicle 59
Figure D.8 – Example measurement layout for Area 4 car interior 60
Figure D.9 – Contact current meters used in the measurement 60
Figure D.10 – Measurement of contact current 61
Figure E.1 – Geometry of vehicle model 64
Figure E.2 – Measured and simulated magnetic field strength leaked from wireless power system in an electric vehicle [46] 65
Figure E.3 – Distance dependence of peak induced electric field strength in human body model 65
Figure E.4 – Analysis of induced electric field strength in the human body for different human positions relative to the vehicle [41] 66
Figure E.5 – Relationship between the maximum induced electric field in the human body and the magnetic field strength [41] 67
Figure E.6 – The induced electric field distributions in a human body model lying on the ground with his right arm stretched [48] 68
Figure E.7 – EMF human exposure condition from the power line and pickup coils of OLEV system 69
Figure E.8 – The model in the field generated by OLEV 70
Figure E.9 – The calculated magnetic field distributions at each distance from OLEV 71
Figure E.10 – Photograph of magnetic field measurement for transmitting and receiving pads of wireless charging system 72
Figure E.11 – Measurement results of magnetic field value for two cases of low voltage output (case 1) and high voltage output (case 2) 72
Figure E.12 – Transmitting and receiving coils, and magnetic sheet 73
Figure E.13 – Simulated magnetic field strength distribution (Charging (a) xy plane, (b) yz plane; Standby model (c) xy plane, (d) yz plane) and measured value (Charging (e) xy plane, (f) yz plane; Standby mode (g) xy plane, (h) yz plane) 73
Figure E.14 – Position of human body and coil (left), exposure point in chest (right) 74
Figure E.15 – Realistic human body model and system position 75
Figure E.16 – Position of the human body model: (a) the human body is moved in the horizontal direction, (b) the coils are moved in vertical direction 76
Figure E.17 – Peak of 10 g average SAR moved in (a) horizontal direction, (b) vertical direction 76
Figure E.18 – Peaks of 10 g average SAR 77
Figure E.19 – Wireless power transfer system configurations 78
Figure E.20 – Electric field and magnetic field distributions around the coil when an input power is 1 W 78
Figure E.21 – Exposure conditions for WPT system 78
Figure E.22 – Top and bird's-eye views of (a) solenoid type and (b) circular spiral type coupling coils, and (c) geometry of electric vehicle with a wireless power transfer system [13] 81
Figure E.23 – A numerical model of dielectric cylinder used in the calculation 83

Documents
Document Sharing Hub

Figure E.24 – Distribution of induced electric field strength inside the cylinder in the vicinity of a one-turn loop with 1 A current 85
Figure E.25 – A two-line current model 85
Figure E.26 – Decay profile of incident magnetic field for each component 86
Figure E.27 – Profile of incident magnetic field for G_n = 13 (left) and 80 (right) 86
Figure E.28 – Distribution of induced electric field for x-, y-, and z-components of the incident magnetic field profiles generated by GGSM 86
Figure E.29 – Solenoid-type WPT system (left) and flat-spiral-type WPT system (right) used for SAR measurement 88
Figure E.30 – SAR distribution in a liquid phantom, calculated by MoM (above) and measured by the developed measurement system (below) 88
Figure E.31 – Two conditions of contact current measurement 89
Figure E.32 – Contact currents with ungrounded condition 90
Figure E.33 – Contact currents with grounded condition 90
Figure E.34 – Contact current with ungrounded metal 91
Figure E.35 – Contact current with grounded metal 91
Figure F.1 – Model of the insulated perfectly conducting wire with non-insulated bare tips used as generic implantable medical device 94
Figure F.2 – $pSAR_{0,1g}$ (W/kg) at the lead tip as a function of frequency in the range 100 kHz to 10 MHz for each lead length (100 mm, 200 mm, 500 mm and 800 mm) 96
Figure F.3 – Induced E-field tangential to the implant, embedded in the homogeneous tissue, in the absence of the implant, to reach ICNIRP2010 BRs in the frequency range 10 kHz to 10 MHz and as a function of the lead length, when the implant is present 97

Table 1 – Summary of application, technology and specification of WPT systems whose frequency range is less than 100 kHz 17
Table 2 – WPT systems whose frequency range is from 100 kHz to 10 MHz 20
Table A.1 – Classification of WPT applications 26
Table A.2 – Characteristics of beam WPT applications 26
Table B.1 – Basic restrictions up to 10 GHz of ICNIRP1998 27
Table B.2 – Basic restrictions of ICNIRP2010 28
Table B.3 – Reference levels for electric and magnetic fields (unperturbed rms values) of ICNIRP1998 29
Table B.4 – Reference levels for electric and magnetic fields (unperturbed rms values) of ICNIRP2010 29
Table B.5 – Reference levels for contact currents of ICNIRP1998 and ICNIRP2010 30
Table B.6 – Basic restrictions up to 5 MHz of IEEE C95.6 and IEEE C95.1 30
Table B.7 – Basic restrictions between 100 kHz and 3 GHz of IEEE C95.1 31
Table B.8 – Magnetic field MPE up to 5 MHz of IEEE C95.1 and IEEE C95.6 31
Table B.9 – Electric field MPE for whole-body exposure up to 100 kHz of IEEE C95.1 and IEEE C95.6 31
Table B.10 – MPE for electric and magnetic field over 100 kHz for whole-body exposure of IEEE C95.1 and IEEE C95.6 32
Table B.11 – Contact current MPE of IEEE C95.1 and IEEE C95.6 32
Table C.1 – Basic restrictions regarding SAR (unit is W/kg) 33
Table C.2 – Possible exclusion power level regarding local SAR 34

Documents
Document Sharing Hub
Full document details: PD IEC/TR 62905:2018

Table C.3 – Coupling transformation matrix to estimate induced E-field for compliance with ICNIRP 2010 38
Table C.4 – Coupling transformation matrix to estimate induced current density for compliance with ICNIRP 1998 38
Table C.5 – Coupling transformation matrix to estimate induced E-field for compliance with IEEE 2005 39
Table C.6 – Coupling transformation matrix to estimate SAR ($pSAR_{10g}$ and wbSAR) for compliance with ICNIRP 1998 and IEEE 2005 39
Table C.7 – Dielectric properties of the tissue equivalent liquid defined in IEC 62209-2 40
Table C.8 – Dielectric properties of the tissue equivalent NaCl solution 40
Table C.9 – Human models and source models 42
Table C.10 – Computational methods 43
Table C.11 – SAR evaluation method based on numerical simulation 43
Table D.1 – Uncertainty of H-field measurements for WPT systems in Area 3 52
Table D.2 – Numerical uncertainty of the exposure of anatomical human models to WPT systems for EV 53
Table D.3 – Uncertainty of EMF measurements for WPT systems in Area 4 54
Table D.4 – Uncertainty of contact current measurements 57
Table D.5 – ICNIRP2010 guideline at 85 kHz 58
Table D.6 – Specification of DUT 58
Table D.7 – Measured incident H-fields and E-fields of Area 3 59
Table D.8 – Measured incident H-fields and E-fields of Area 4 59
Table D.9 – Measurement results of contact current [mA] 61
Table E.1 – Estimated permissible power for WPT system for EV 68
Table E.2 – Local SAR and induced electric field in in a human body on the chest surface 74
Table E.3 – Simulated result of local SAR and whole-body average SAR by Nagoya Institute of Technology (NITech) / NTT DOCOMO and NICT (input power is 40 W) 79
Table E.4 – Dimensions of WPT systems for electric vehicles considered by different groups [13] 81
Table E.5 – Coupling factor for internal electric field of WPT systems for EV [13] 82
Table E.6 – Coupling factor for peak 10 g SAR for WPT systems at 6,78 MHz (implemented on the desk) [13] 83
Table E.7 – Coupling factor for internal electric field for WPT systems at 6,78 MHz (implemented on the desk) [13] 83
Table E.8 – NICT and IT'IS results of induced electric field and local peak 10 g average SAR in the dielectric cylinder using GGSM 87
Table E.9 – Experimental and numerical results of spatial peak 10 g average SAR (input power = 10 W) 88
Table F.1 – Preliminary medical implant enhancement factors for nerve stimulation up to 10 MHz 93
Table F.2 – Preliminary medical implant enhancement factors for tissue heating up to 10 MHz (ΔT) 93
Table F.3 – Dielectric and thermal properties assigned to the muscle tissue and to the generic implants 94
Table F.4 – Induced E-field in the homogeneous tissue without the implant to reach J-BR of ICNIRP 1998 95
Table F.5 – Induced E-field in the homogeneous tissue without the implant to reach SAR-BR of ICNIRP 1998 and IEEE 2005 for $f \geq 100$ kHz 96

AVA Documents
Document Sharing Hub

INTERNATIONAL ELECTROTECHNICAL COMMISSION

EXPOSURE ASSESSMENT METHODS FOR WIRELESS POWER TRANSFER SYSTEMS

FOREWORD

1) The International Electrotechnical Commission (IEC) is a worldwide organization for standardization comprising all national electrotechnical committees (IEC National Committees). The object of IEC is to promote international co-operation on all questions concerning standardization in the electrical and electronic fields. To this end and in addition to other activities, IEC publishes International Standards, Technical Specifications, Technical Reports, Publicly Available Specifications (PAS) and Guides (hereafter referred to as "IEC Publication(s)"). Their preparation is entrusted to technical committees; any IEC National Committee interested in the subject dealt with may participate in this preparatory work. International, governmental and non-governmental organizations liaising with the IEC also participate in this preparation. IEC collaborates closely with the International Organization for Standardization (ISO) in accordance with conditions determined by agreement between the two organizations.
2) The formal decisions or agreements of IEC on technical matters express, as nearly as possible, an international consensus of opinion on the relevant subjects since each technical committee has representation from all interested IEC National Committees.
3) IEC Publications have the form of recommendations for international use and are accepted by IEC National Committees in that sense. While all reasonable efforts are made to ensure that the technical content of IEC Publications is accurate, IEC cannot be held responsible for the way in which they are used or for any misinterpretation by any end user.
4) In order to promote international uniformity, IEC National Committees undertake to apply IEC Publications transparently to the maximum extent possible in their national and regional publications. Any divergence between any IEC Publication and the corresponding national or regional publication shall be clearly indicated in the latter.
5) IEC itself does not provide any attestation of conformity. Independent certification bodies provide conformity assessment services and, in some areas, access to IEC marks of conformity. IEC is not responsible for any services carried out by independent certification bodies.
6) All users should ensure that they have the latest edition of this publication.
7) No liability shall attach to IEC or its directors, employees, servants or agents including individual experts and members of its technical committees and IEC National Committees for any personal injury, property damage or other damage of any nature whatsoever, whether direct or indirect, or for costs (including legal fees) and expenses arising out of the publication, use of, or reliance upon, this IEC Publication or any other IEC Publications.
8) Attention is drawn to the Normative references cited in this publication. Use of the referenced publications is indispensable for the correct application of this publication.
9) Attention is drawn to the possibility that some of the elements of this IEC Publication may be the subject of patent rights. IEC shall not be held responsible for identifying any or all such patent rights.

The main task of IEC technical committees is to prepare International Standards. However, a technical committee may propose the publication of a Technical Report when it has collected data of a different kind from that which is normally published as an International Standard, for example "state of the art".

IEC TR 62905, which is a Technical Report, has been prepared by IEC technical committee 106: Methods for the assessment of electric, magnetic and electromagnetic fields associated with human exposure.

The text of this Technical Report is based on the following documents:

Enquiry draft	Report on voting
106/416/DTR	106/424A/RVDTR

Full information on the voting for the approval of this Technical Report can be found in the report on voting indicated in the above table.

This document has been drafted in accordance with the ISO/IEC Directives, Part 2.

Documents
Document Sharing Hub

The committee has decided that the contents of this document will remain unchanged until the stability date indicated on the IEC website under "http://webstore.iec.ch" in the data related to the specific document. At this date, the document will be

- reconfirmed,
- withdrawn,
- replaced by a revised edition, or
- amended.

A bilingual version of this publication may be issued at a later date.

IMPORTANT – The 'colour inside' logo on the cover page of this publication indicates that it contains colours which are considered to be useful for the correct understanding of its contents. Users should therefore print this document using a colour printer.

Documents
Document Sharing Hub

Full document details: PD IEC/TR 62905:2018

INTRODUCTION

IEC TC 106 has the scope to prepare International Standards on measurement and calculation methods used to assess human exposure to electric, magnetic and electromagnetic fields. Wireless power transfer (WPT) systems have been developed and gradually become popular over the world. WPT basically utilize similar wireless technologies to provide power to mobile phones, tablet PCs, electric vehicles (EVs) and so on without cables; but the used frequency range, i.e., tens of kHz to tens of MHz, has not been often used and paid attention to. Both stimulation-based effects (< 10 MHz, for example) and heat-based effects (> 100 kHz, for example) should be considered in this frequency range. ITU-R published a report (ITU-R SM. 2303-1) related to WPT in June 2015 which also mentions RF exposure assessment methodologies. However, no concrete assessment method has been introduced. Only IEC TC 69 has addressed exposure assessment method of WPT for EV in IEC 61980-1:2015. There is no product standard related to WPT other than that standard. Considering that WPT products might be spread in the near future, IEC TC 106 needs to be aware of this issue and established a working group to address methods for assessment of WPT related to human exposures to electric, magnetic and electromagnetic fields.

Based on these backgrounds IEC TC 106 prepared this document consisting of an overview of WPT, basic exposure assessment methods for direct and indirect effects by WPT, case studies, and relevant research. Frequency up to 10 MHz is mainly focused on because both stimulation and heat effects need to be considered but have not been addressed so far. This document also mentions enhancement of internal fields by medical implant devices.

It is hoped that this document will be useful and helpful to develop International Standards for WPT exposure assessment.

Documents
Document Sharing Hub

Full document details: PD IEC/TR 62905:2018

EXPOSURE ASSESSMENT METHODS FOR WIRELESS POWER TRANSFER SYSTEMS

1 Scope

This document describes general exposure assessment methods for wireless power transfer (WPT) at frequency up to 10 MHz considering thermal and stimulus effects. Exposure assessment procedures and experimental results are shown as examples such as electric vehicles (EVs) and mobile devices.

2 Normative references

There are no normative references in this document.

3 Terms and definitions

For the purposes of this document, the following terms and definitions apply.

ISO and IEC maintain terminological databases for use in standardization at the following addresses:

- IEC Electropedia: available at http://www.electropedia.org/
- ISO Online browsing platform: available at http://www.iso.org/obp

3.1
basic restriction
BR
restriction on exposure to time-varying electric, magnetic and electromagnetic fields that is based on established biological effects

3.2
contact current
current flowing into the body resulting from contact with a conductive object in an electromagnetic field

Note 1 to entry: This is the localized current flow into the body (usually the hand, for a light brushing contact).

3.3
current density
current per unit cross-sectional area flowing inside the human body as a result of exposure to electromagnetic fields

3.4
device under test
DUT
device that is tested according to the procedures specified in this document

3.5
dielectric constant
real part of the complex relative permittivity of the lossy material

Documents
Document Sharing Hub

Full document details: PD IEC/TR 62905:2018

3.6
direct effect
biological effect resulting from direct interaction of electromagnetic field with biological structures

3.7
electric field strength
magnitude of a field vector at a point that represents the force (F) on an infinitely small charge (q) divided by the charge

3.8
exposure
situation that occurs wherever a person is subjected to electric, magnetic or electromagnetic fields

3.9
incident field
electric and magnetic fields incident upon the human body

Note 1 to entry: This document focuses on the WPT operating close to the human body at frequency below 10 MHz. Electric and magnetic fields need to be separately evaluated in this region.

3.10
induced current
current induced inside the body as a result of exposure to electromagnetic fields

3.11
indirect effect
biological effect resulting from indirect interaction of electromagnetic field with biological structure

3.12
magnetic field strength
magnitude of vector quantity obtained at a given point by subtracting the magnetization M from the magnetic flux density B divided by the magnetic constant μ_0

3.13
peak spatial-average SAR
maximum average SAR within a local region based on a specific averaging volume or mass, e.g. any 1 g or 10 g of tissue in the shape of a cube

3.14
phantom
physical model similar in appearance to the human anatomy and comprised of material with electrical properties similar to the corresponding tissues

Note 1 to entry: A phantom representing the human head could be a simple spherical model or a more complex multi-tissue anthropomorphic model.

3.15
reference level
field level derived from the basic restrictions under worst case assumptions (e.g. exposure to homogeneous field)

3.16
specific absorption rate
SAR
SAR in the tissue-equivalent liquid can be determined by E-field or the rate of temperature increase, according to:

Documents
Document Sharing Hub

Full document details: PD IEC/TR 62905:2018

$$\text{SAR} = \frac{\sigma E^2}{\rho}$$

$$\text{SAR} = C_\text{h} \left.\frac{\text{d}T}{\text{d}t}\right|_{t=0}$$

where

SAR is the specific absorption rate in W/kg;

E is the rms value of the electric field strength in the tissue medium in V/m;

σ is the electrical conductivity of the tissue medium in S/m;

ρ is the mass density of the tissue medium in kg/m^3;

C_h is the specific heat capacity of the tissue medium in J/(kg K);

$\left.\frac{\text{d}T}{\text{d}t}\right|_{t=0}$ is the initial time derivative of temperature in the tissue medium in K/s.

4 Symbols and abbreviations

4.1 Physical quantities

The internationally accepted SI units are used throughout this document.

Symbol	Quantity	Unit	Dimensions
C_h	Specific heat capacity	joule per kilogram per kelvin	J/(kg K)
E	Electric field strength	volt per metre	V/m
f	Frequency	hertz	Hz
J	Current density	ampere per square metre	A/m^2
P	Average (temporal) absorbed power	watt	W
T	Temperature	kelvin	K
ε	Permittivity	farad per metre	F/m
λ	Wavelength	metre	m
σ	Electric conductivity	siemens per metre	S/m

NOTE In this document, temperature is quantified in degrees Celsius, as defined by: T (°C) = T (K) – 273,15.

4.2 Constants

Symbol	Physical constant	Magnitude
η_0	Intrinsic impedance of free space	120π Ω or 377 Ω
ε_0	Permittivity of free space	8,854 × 10^{-12} F/m
μ_0	Permeability of free space	4π × 10^{-7} H/m

4.3 Abbreviations

BR basic restriction

DUT device under test

RF radio frequency

rms root mean square

AVA Documents Document Sharing Hub

Full document details: PD IEC/TR 62905:2018

RSS	root sum square
CW	continuous wave
SAR	specific absorption rate
psSAR	peak spatial-average SAR
WPT	wireless power transfer
EV	electric vehicle

5 Overview of WPT systems

5.1 General

Clause 5 describes an overview of WPT systems, which include WPT technologies, applications and frequency ranges reported by ITU-R [1][1]. WPT systems using frequency range over 10 MHz are described in Annex A.

5.2 WPT systems whose frequency range is less than 100 kHz

a) Magnetic induction WPT systems for home appliances

Inductive power sources (transmitters) may stand alone or be integrated into the kitchen counter tops or dining tables. These transmitters could combine the WPT to an appliance with conventional inductive heating.

For the home appliance application, the power level is usually up to several kilowatts, and the load may be motor-driven or heating type (Figure 1). Future products will support more than 2 kW power and some new design proposal for cordless kitchen appliances is being investigated.

Considering the high power usage in the home, frequencies in the order of tens of kHz are preferred to restrict electromagnetic exposure to human bodies. And high reliable devices such as Insulated Gate Bipolar Transistors (IGBTs) are usually used and these devices are working in the 10 kHz to 100 kHz frequency range.

The product applied in the kitchen needs to meet the safety and electromagnetic field (EMF) requirements and it is a key issue that transmitter should be the light and small size to fit the kitchen in addition to being low cost. The distance between the transmitter and the receiver is intended to be less than 10 cm.

The following pictures show examples of wireless power kitchen appliances that will come to the market soon.

Figure 1 – Wireless power kitchen appliances [1]

WPT systems have already integrated into the product lines of semiconductor and LCD panel; the following pictures show examples (Figure 2).

[1] Numbers in square brackets refer to the Bibliography.

Documents
Document Sharing Hub
Full document details: PD IEC/TR 62905:2018

(WPT overhead shutter of LCD product line)

(WPT overhead transmission of Semiconductor product line)

Concept of wireless hybrid kitchen

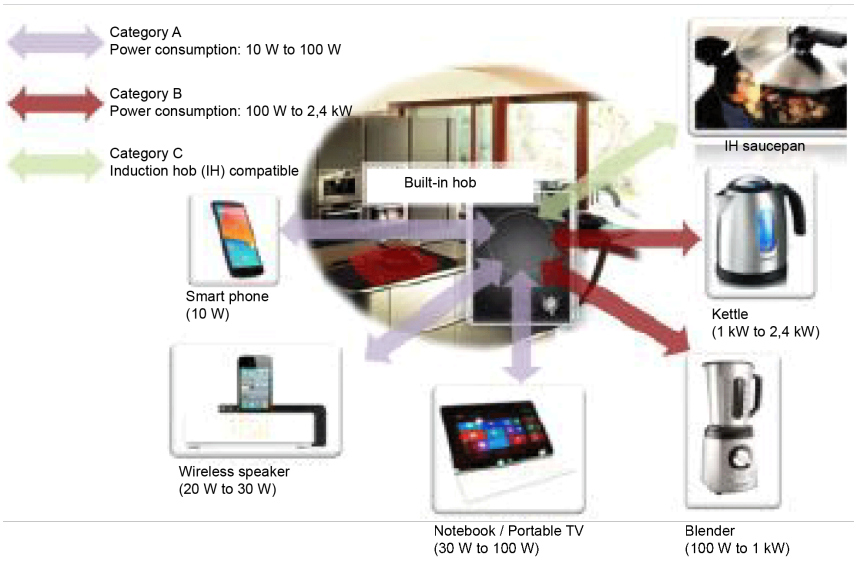

(WPT kitchen island of apartment)

Figure 2 – Use cases of the LCD and semiconductor product lines and kitchen WPT systems [1]

b) Magnetic induction WPT systems for electric vehicles

Magnetic field wireless power transmission (MF-WPT) is one of the focus points in standardization discussion such as IEC PT 61980 and SAE J2954TF regarding WPT for EV including plug-in hybrid EV (PHEV) though there are several types of WPT methods. MF-WPT for EV and PHEV contains both inductive type and magnetic resonance type. Electric power can be transmitted from the primary coil to the secondary coil efficiently via magnetic field by using resonance between the coil and the capacitor.

Expected passenger vehicle applications assume the following aspects:

1) WPT application: Electric power transmission from electric outlet at a residence and/or public electric service to EVs and PHEVs.

2) WPT usage scene: at residential, apartment, public parking, etc.

3) Electricity use in vehicles: All electric systems such as charging batteries, computers, air conditioners, etc.

4) Examples of WPT usage scene. An example for passenger vehicles is shown in Figure 3.

5) WPT method: A WPT system for EV/PHEV has at least two coils (Figure 3). One is in the primary device and the other is in the secondary device. The electric power will be transmitted from primary device to secondary device through magnetic flux/field.

AVA Documents
Document Sharing Hub

6) Device location (Coil location):
   i) primary device: on ground or/and in ground;
   ii) secondary device: lower surface of vehicle.
7) Air gap between primary and secondary coils: less than 30 cm.
8) Transmission power class example: 3 kW, 6 kW, and 20 kW.
9) Safety: primary device can start power transmission only if secondary device is located in the proper area for WPT. Primary device needs to stop transmission if it is difficult to maintain safe transmission.

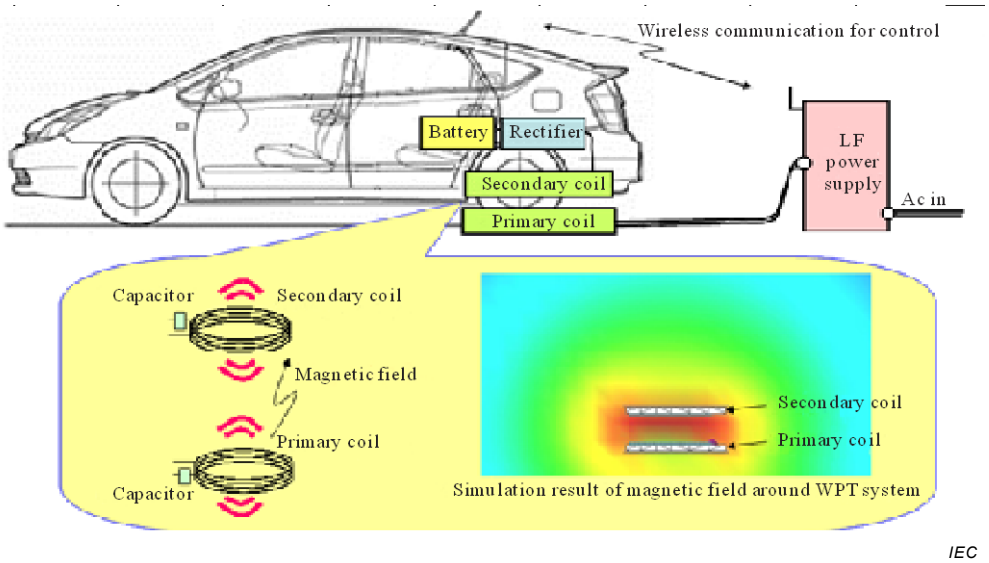

Figure 3 – Example of a WPT system for EV/PHEV [1]

In order to run heavy duty vehicles such as an electrical bus, the infrastructure of the system is to embed electric strips in roadbeds that magnetically transmit energy to battery-powered vehicles above. The bus can move along the electrical strips without any stopping for charging its power, known as on-line electric vehicle (OLEV) (Figure 4). Furthermore, the bus can be charged at stopping condition in bus stop or bus garage. The online bus at an amusement park or at the city is the first system operated in the form of EV for heavy duty vehicles in the world.

Documents
Document Sharing Hub
Full document details: PD IEC/TR 62905:2018

IEC

Figure 4 – Example of an online electric vehicle [1]

The design of magnetic field from transmitting coil to receiving coil is the key in WPT system design for maximum power and efficiency.

First, the magnetic field should be in resonance by using resonant transmitting and receiving coils to have high power and efficiency.

Second, the magnetic field shape should be controlled, by using magnetic material such as ferrite core, to have minimum magnetic resistance in the path of the magnetic field, for lower leakage magnetic field and higher transmission power.

It is called shaped magnetic field in resonance (SMFIR) (Figure 5).

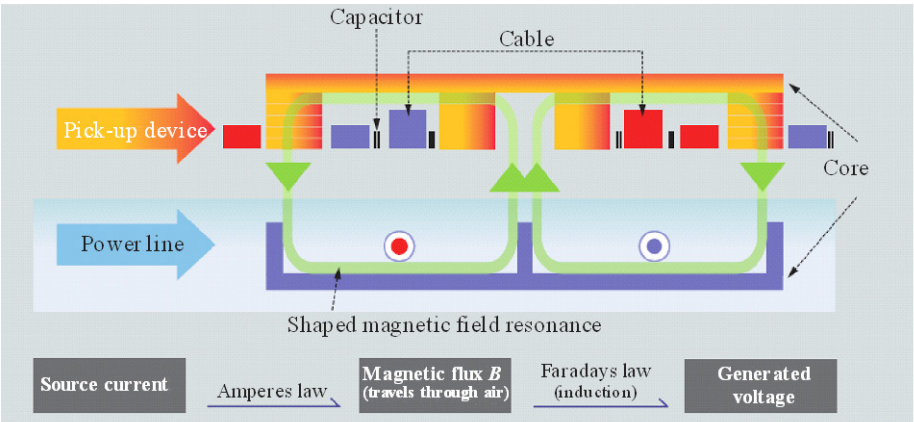

IEC

Figure 5 – Technical characteristics of an online electric vehicle [1]

Table 1 summarizes application, technology, and specification of WPT systems at frequency less than 100 kHz.

Documents
Document Sharing Hub
Full document details: PD IEC/TR 62905:2018

Table 1 – Summary of application, technology and specification of WPT systems whose frequency range is less than 100 kHz.

Parameter/Category	Magnetic induction for home appliances	Magnetic resonance and/or induction for electric passenger vehicles	Magnetic induction for heavy duty vehicles
Application types	Home appliances, office equipment (incl. higher power applications)	EV charging in parking (Static)	On-line electric vehicle (OLEV) (EV charging while in motion including stopping/parking) EV charging in parking for bus
Technology principle	Magnetic induction	Magnetic resonance and/or induction	Magnetic induction
Frequency ranges under consideration	Japan: 20,05 kHz to 38 kHz, 42 kHz to 58 kHz, 62 kHz to 100 kHz	Global: 84,5 kHz to 85,5 kHz, or 81,38 kHz to 90,00 kHz 81,38 kHz to 90 kHz (SAE J2954 TIR)	
Frequency ranges assigned nationally		Japan: 79 kHz to 90 kHz Europe: 81,38 kHz to 90,00 kHz	Korea: 19 kHz to 21 kHz, 59 kHz to 61 kHz Sweden: 19 kHz to 21 kHz
Power range	Japan: Several watts to 1,5 kW	Japan: 3,3 kW and 7,7 kW; Classes are assumed for passenger vehicle Worldwide: 3,3kW (WPT1), 7,7kW (WPT2) and 11 kW (WPT3)	Korea: – Minimum power: 75 kW – Maximum power: 80 kW – Air gap: 20 cm – Time and cost saving Sweden: – Minimum power: 100 kW – Maximum power: 200 kW – Air gap: 3 cm to 5 cm
Power transfer distance	0 to 10 cm	10 cm to 25 cm	20 cm (typical)
Advantage	– Increased power – Flexibility for placement and distance of receiving end – Transmitter can supply power for several receivers within a wide range simultaneously.	Higher power transmission efficiency	– Increased power transmission efficiency – Maximized air gap – Reduced audible noise – Effective shield design – Time and cost saving

5.3 WPT systems whose frequency range is from 100 kHz to 10 MHz

a) Magnetic induction WPT systems for portable and mobile devices

The WPT by magnetic inductance is a well-known technology, applied for a very long time in transformers where primary and secondary coils are inductively coupled, e.g. by the use of a shared magnetic permeable core (Figure 6). Inductive power transmission through the air with primary and secondary coils physically separated is also a known technology for more than a century, also known as Tightly Coupled WPT. A feature of this technology is that the efficiency of the power transmission drops if the distance through the air is larger than the coil diameter and if the coils are not aligned within the offset distance. The

Documents
Document Sharing Hub

efficiency of the power transmission depends on the coupling factor (k) between the inductors and their quality (Q). This technology can achieve higher efficiency than magnetic resonance method. This technology has been commercialized for charging of smart phones. With a coil array, this technology also offers flexibility in the receiver coil location of the transmitter.

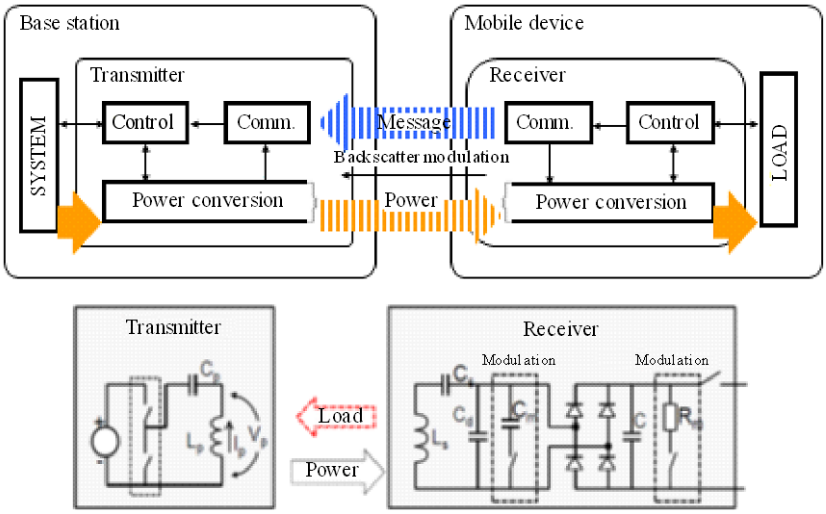

Figure 6 – Example magnetic induction WPT system block diagram [1]

b) Magnetic resonance WPT systems for portable and mobile devices

The WPT by magnetic resonance is also known as loosely coupled WPT (Figure 7). The theoretical basis of this magnetic resonance method was first developed in 2005 by Massachusetts Institute of Technology, and their theories were validated experimentally in 2007 [2]. The method uses a coil and capacitor as a resonator, transmitting electric power through the electromagnetic resonance between transmitter coil and receiver coil (magnetic resonant coupling). By matching the resonance frequency of both coils with high Q factor, electric power can be transmitted over a long distance where magnetic coupling between two coils is low. The magnetic resonance WPT can transmit electric power over a range of up to several metres.

This technology also offers flexibility in the receiver coil location of the transmission coil. Practical technical details can be found in many technical papers, for example, those in [2] and [3].

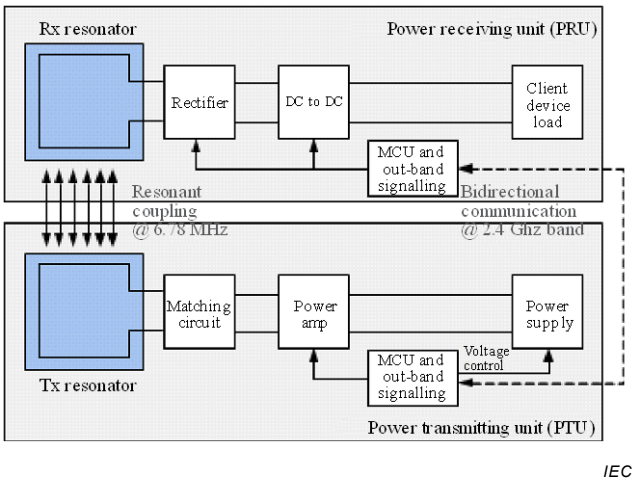

Figure 7 – Example magnetic resonance WPT system block diagram [1]

c) Capacitive coupling WPT systems for portable and mobile devices

AVA Documents Document Sharing Hub
Full document details: PD IEC/TR 62905:2018

The capacitive coupling WPT system has two sets of electrodes, and does not use coils as magnetic type of WPT systems. Power is transmitted via an induction field generated by coupling the two sets of electrodes. The capacitive coupling system has some merits as follows. Figures 8 and 9 show system block diagram and typical structure, respectively.

1) Capacitive coupling system provides horizontal position freedom with an easy-to-use charging system for end customers.
2) Very thin (less than 0,2 mm) electrode can be used between transmitter and receiver in the system, and hence suitable for integration into slim mobile devices.
3) No heat generation in the wireless power transmission area. This means the temperature does not rise in the wireless power transmission area, which protects the battery from heating even when the unit is placed nearby.
4) The emission level of the electric field is low because of the structure of its coupling system. The electric field is emitted from electrodes for power transmission.

Table 2 summarizes application, technology and specification of WPT systems whose frequency range is from 100 kHz to 10 MHz.

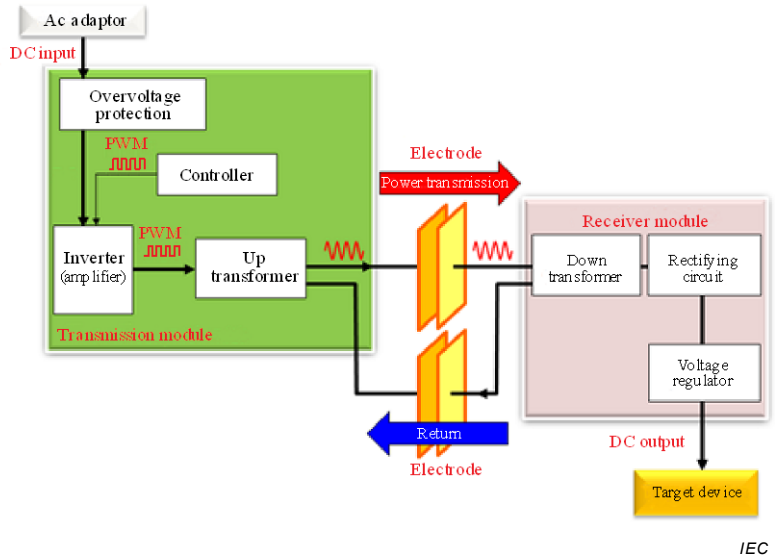

Figure 8 – Capacitive coupling WPT system block diagram [1]

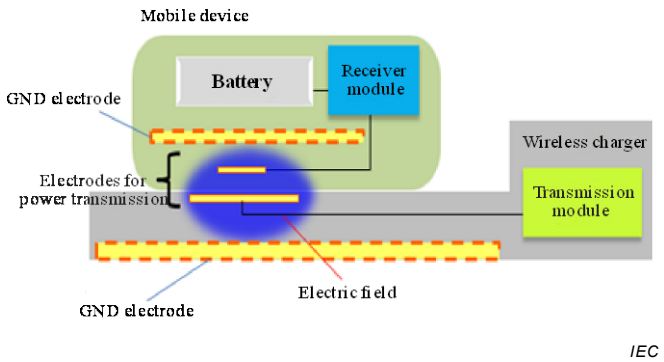

Figure 9 – Typical structure of the capacitive coupling system [1]

Documents
Document Sharing Hub
Full document details: PD IEC/TR 62905:2018

Table 2 – WPT systems whose frequency range is from 100 kHz to 10 MHz

Parameter/Category	Magnetic induction for portable and mobile devices	Magnetic resonance for portable and mobile devices	Capacitive coupling for portable and mobile devices
Application types	Mobile devices, tablets, note-PCs	Mobile devices, tablets, note-PCs, IT devices	Portable devices, tablets, note-PCs
Technology principle	Resonant magnetic induction	High magnetic resonance	WPT via electric field
Frequency ranges under consideration	Global: 110 kHz to 205 kHz	Global: 6 765 kHz to 6 795 kHz	
Frequency ranges assigned nationally	Korea: 100 kHz to 205 kHz	Japan, Korea: 6 765 kHz to 6 795 kHz	Japan: 425 kHz to 524 kHz
Power range under consideration	5 W to 15 W	Japan: Several watts to 100 W	Japan: Up to 100 W
Power transfer distance	0 to 1 cm	0 to 30 cm	0 to 1 cm
Advantage	Global harmonized spectrum Higher power transmission efficiency	– Global spectrum availability possible – Flexibility for placement and distance of receiving end – Transmitter can supply power for several receivers within a wide range simultaneously.	High efficiency (70 % to 85 %) – No heat generation at the electrode – Low emission level – Horizontal position freedom

6 Basic assessment methods

6.1 General

Clause 6 provides basic assessment methods considering both direct (6.2) and indirect (6.3) effects of electromagnetic fields for WPT systems. The direct effect deals with induced electric field and/or SAR and the indirect effect deals with contact current. International exposure guidelines are described in Annex B. Assessment methods for those quantities are different. More detailed explanation of the methods and case studies are described in Annex C and Annex D, respectively. Numerical and experimental studies with respect to exposure assessment of WPT are presented in Annex E.

6.2 Basic assessment methods considering direct effect

6.2.1 General

Subclause 6.2 provides basic assessment methods considering direct effect of electromagnetic fields [4-7]. Evaluations are made either against basic restrictions or against derived reference levels. In the international guidelines, different limits of basic restrictions and reference levels are defined for thermal and stimulus effects. There are four steps as described in 6.2.2 to 6.2.5 to assess the WPT exposure and demonstrate compliance with the basic restrictions and/or reference levels. Any of the four steps suitable for the exposure situation can be used. The evaluation based on transmit power or current (6.2.2) is the easiest way to confirm compliance and the compliance against reference levels by evaluating incident fields (6.2.3) is the next; however those methods are rather more conservative than the compliance against basic restrictions. The compliance against basic restrictions by evaluating induced E-field and/or SAR (6.2.5) represents practical exposure without additional evaluations. There is another method for the compliance directly against basic restrictions by evaluation of incident fields (6.2.4).

AVA Documents
Document Sharing Hub

Full document details: PD IEC/TR 62905:2018

There is an important issue with respect to medical implants. It was reported that electromagnetic fields in the body might be enhanced around medical implants when expose to electromagnetic field emitted by a source. According to [8] electromagnetic fields used for WPT generate a 1 °C temperature increase in the tissue around medical implants at levels even when the field is below the exposure limits at frequencies below 10 MHz. The factor considered in enhancement by medical implant is proposed in Annex F. IEC TC 106 invited ICNIRP and IEEE/ICES to provide their opinions and IEC TC 106 had conference call with IEC TC 62, ISO/TC 105, and Association for the advancement of Medical Instrumentation (AAMI) to discuss the issues. As a result the liaisons with IEC TC 62/SC 62A, SC 62C, SC 62D, ISO/TC 150/SC 6, and IEC TC 77 are important for IEC TC 106 to exchange information [9].

6.2.2 Evaluation based on transmit power or current

The maximum permissible transmit power or current of WPT can be defined as not to exceed basic restrictions. The concept of evaluation procedure is described in detail in Clause C.1.

6.2.3 Evaluation of incident fields against reference levels

Both incident electric and magnetic field strengths are measured or calculated at a certain distance including the closest distance and in all directions where DUT may operate near persons. For the uniform field, the measured or calculated values of electric and magnetic fields are simply compared to the reference level. In the case of non-uniform field such as from the WPT systems, the measured or calculated field values may be spatially averaged over the exposed regions of the body, with the important proviso that the basic restrictions for local SAR and internal electric field are not exceeded. The spatial averaging may not be practical if only a very small portion of a body region is exposed to the DUT. Under such circumstances, maximum peak field needs to be considered. Usage of the spatial averaging and its precise method needs to be defined for each product standard. Either the peak or spatially averaged field strength is compared to the applicable reference levels to determine compliance.

The assessment method is described in detail in Clause C.2.

6.2.4 Evaluation of incident fields against basic restrictions

6.2.4.1 General

The reference levels of electromagnetic field are established based on the maximum induced quantities in the human body exposed to the uniform electromagnetic fields. Therefore, the evaluated results considering reference levels may be too conservative for localized exposure from an EMF source such as WPT systems.

6.2.4.2 Coupling factor method

IEC 62311 [10] and IEC 62233 [11] introduce a coupling factor for magnetic field evaluation so as to consider non-uniformity of the field close to the EMF source. From the definition of the coupling factor, it is possible to evaluate the value of the coupling factor by numerical simulation with the ratio of induced quantities and incident magnetic field [12-13].

For a specific condition of frequency, field distribution, distance to human body, etc., a conservative value of the coupling factor can be derived numerically.

Using the coupling factor value determined for a certain kind of WPT systems, the incident magnetic field strength can be multiplied by the coupling factor and compared to the reference levels directly. The assessment method is described in detail in Clause C.3.

Documents
Document Sharing Hub

Full document details: PD IEC/TR 62905:2018

The following criteria need to be considered in order to apply coupling factor.

– Induced quantities such as internal electric field or SAR caused by incident electric field are negligible compared to those by incident magnetic field.
– The whole-body average SAR is negligible compared to respective limits and contribution of the localized average SAR or the internal electric field is dominant.
– Evaluation conditions such as frequency, field distribution, distance to human body, etc., need to be comparable to those used in derivation of the coupling factor.

6.2.4.3 Generic gradient source model

The generic gradient source model (GGSM) [14] is a method to mitigate over-estimation by incident magnetic field assessment in strong field gradients that are common in the vicinity of WPT systems.

The method is based on the following quantities of the incident magnetic field:

– frequency;
– B-field amplitude (B_{xyz}) and the local max B-field gradient per metre $(B_{x,y,z-\Delta} - B_{x,y,z+\Delta})/2\Delta \times B_{x,y,z}$) of the field at any point in free space.

Based on the above parameter [14] provides transformation matrices to conservatively estimate the induced electric field, current density and the absorbed power, allowing to test against basic restrictions for all international guidelines.

– ICNIRP 1998:
  - 10 g peak spatial-average SAR;
  - current density averaged over 1 cm^2.
– ICNIRP 2010:
  - E-field in a $2 \times 2 \times 2$ mm^3 cube.
– IEEE C95.1-2005:
  - 10 g peak spatial average SAR;
  - E-field along a straight-line of 5 mm.

The assessment method is described in detail in Clause C.4.

6.2.5 Evaluation of induced E-field and SAR against basic restrictions

6.2.5.1 Measurement

SAR can be measured using a small probe in a liquid-filled phantom model of the human body, which is exposed to electromagnetic fields created by the DUT. Measured values can be directly compared with basic restrictions. The evaluation and validation procedure is described in IEC 62209-2:2010, whose frequency range is 30 MHz to 6 GHz [15]. IEC TC 106 is expanding the lower frequency limit to 4 MHz. The assessment method is described in detail in C.5.1.

6.2.5.2 Calculation

Induced electric field or SAR can be calculated by numerical simulation using anatomical human model, analytical method and so forth to be compared with basic restrictions. Validity of the simulation model and methodology need to be validated prior to evaluation. The assessment method by numerical simulation is only described in detail in C.5.2.

Documents
Document Sharing Hub
Full document details: PD IEC/TR 62905:2018

6.2.6 Assessment procedure

Figure 10 is a flowchart of assessment procedure. There are four steps including (6.2.2) to (6.2.5) in case of the direct effect exposed to WPT products. The step which is the most suitable for products and the exposure situation can be used.

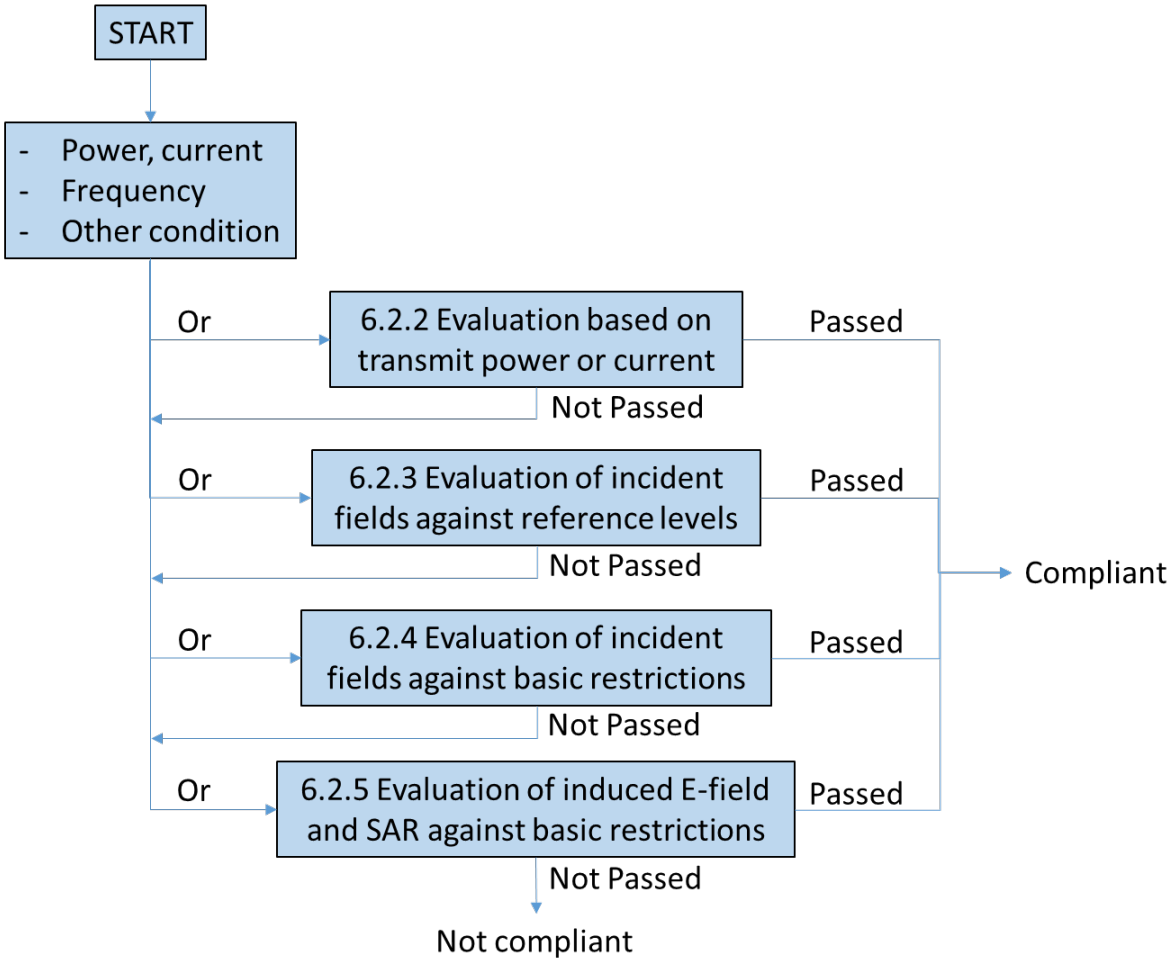

Figure 10 – Flowchart of assessment procedure considering the direct effect

6.3 Basic assessment method considering indirect effect

Subclause 6.3 provides basic assessment methods considering indirect effect of electromagnetic fields. Contact current is the only indirect effect considered in this document and international guidelines. Contact current flows into a biological body via a contacting electrode or other source of current.

Evaluation of contact current can be assessed either by incident electromagnetic fields or direct measurement.

In regard to compliance by incident electromagnetic fields, the following considerations both need to be applied.

– Incident electric field level to prevent adverse indirect effects of contact current (shocks and burns) is shown in guidelines [5].

– Incident magnetic field level to prevent adverse indirect effects of contact current can be calculated by current induced in the loop formed with grounded metal and human body with Formula (1).

Documents
Document Sharing Hub
Full document details: PD IEC/TR 62905:2018

$$H = \frac{Z}{2\pi f \mu_0 S} I_c \quad (1)$$

where

I_c is contact current (A);

Z is impedance of human body (Ω) (see Clause C.6);

S is area of loop such as 1,5 m × 0,5 m.

Contact currents can also be directly measured by a contact current meter with ungrounded or grounded metal object placed in the vicinity of the WPT systems. Figure 11 shows exposure situations for ungrounded and grounded metal objects.

Figure 12 is a flowchart of assessment procedure. Details of measurement conditions, measurement setup, etc., for contact current are under investigation within IEC TC 106. The assessment method is described in detail in Clause C.6.

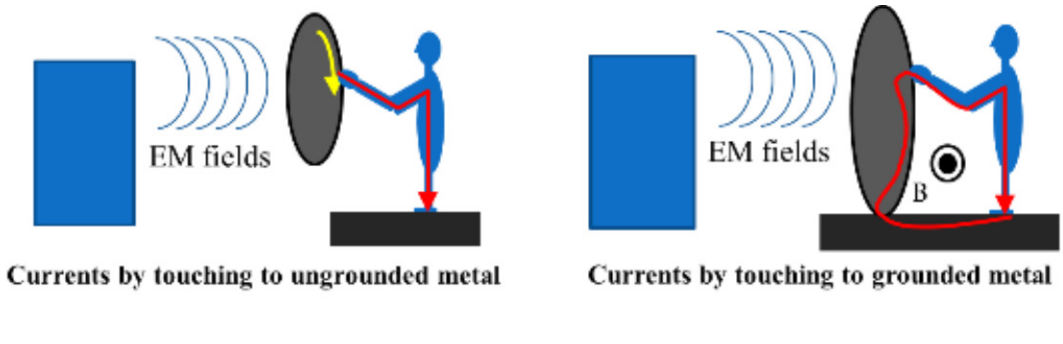

Figure 11 – Two exposure situations for ungrounded and grounded metal objects

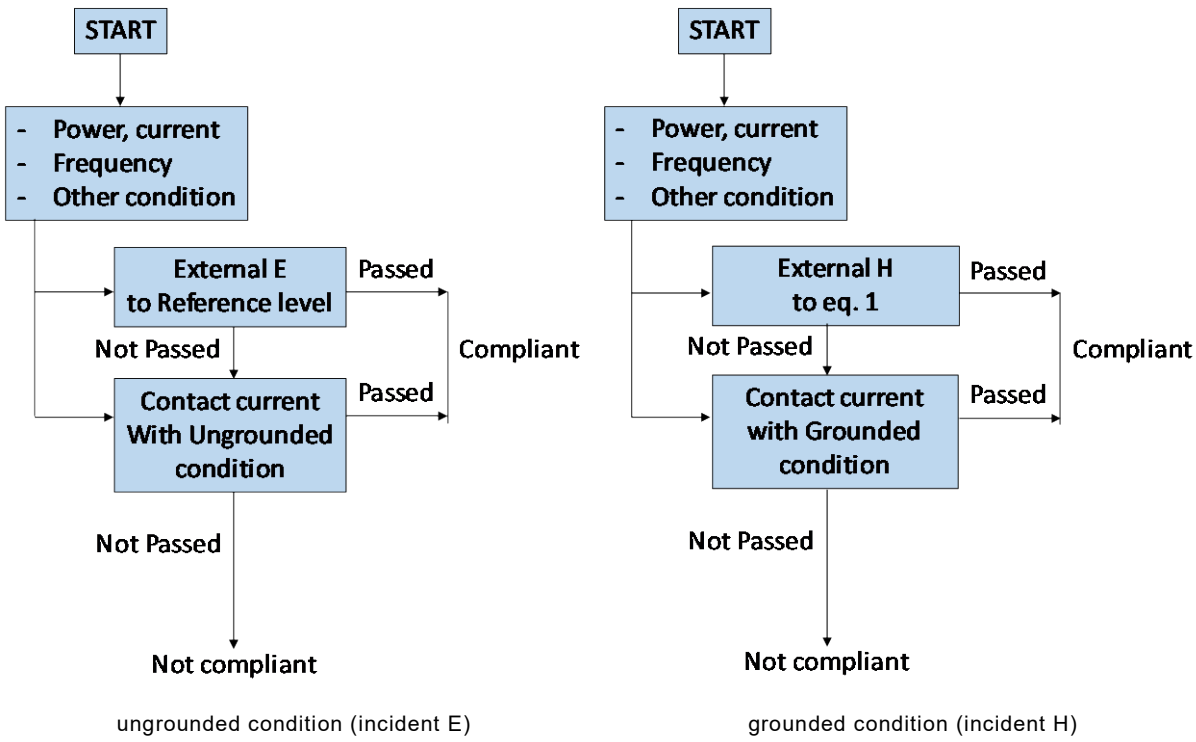

Figure 12 – Flowchart of assessment procedures for indirect effects

AVA Documents
Document Sharing Hub
Full document details: PD IEC/TR 62905:2018

Annex A
(informative)

WPT systems whose frequency range is over 10 MHz

WPT system operating at the frequency over 10 MHz is also under development, although the method for exposure assessment is not discussed in this document.

WPT system operating at the frequency over 10 MHz is classified as a non-coupled WPT whose energy is radiated from the transmitter and in which there is no effect from change of parameters of the transmitter/receiver to those of the receiver/transmitter. It is also named as WPT via radio frequency. Typical electromagnetically coupled WPT is an inductive coupling WPT, a capacitive coupling WPT, and a resonance coupling WPT and its frequency is generally lower than 10 MHz. Number of transmitters and receivers in the non-coupled WPT system are free from circuit parameters of the transmitters and the receivers. Main theory of the WPT via radio frequency in free space is based on Friis' transmission formula. The radiated power of the electromagnetic wave is propagated not only in space but also in two-dimensional waveguide (called 'sheet') and in waveguide (called 'pipe'). Microwave and millimetre wave are often used for the non-coupled WPT system [16]. But frequency itself is not important in the classification of coupled and non-coupled WPT. There is a research and development of the coupled WPT at microwave frequency in which dielectric resonators at 2,45 GHz are used as a transmitter and a receiver [17]. The non-coupled WPT is historically called a MPT (Microwave Power Transfer/Transmission), a WPT via radio frequency, and 'beam-type' WPT whose word is mainly used in ITU (International Telecommunication Union).

The present development of the WPT via radio frequency beam owes to William Brown in 1960s in US using microwave technology developed during the World War II [18]. He transmitted the microwave power from a transmitter to a receiver (point-to-point) with the overall (DC-microwave-DC) efficiency of 54 % in his laboratory [19]. In the 1960s, the main stream of R&D of the WPT via radio frequency was beam-type WPT whose radiated power from the transmitter was concentrated to one receiver. In 1980s, Hiroshi Matsumoto's group at Kyoto University in Japan advanced the MPT toward a Solar Power Satellite (SPS) application and also toward the other commercial application of the MPT to battery-less sensors, to a mobile phone, to an electrical vehicle, and in pipe in building [20][21]. After a revolution of the resonance WPT by MIT in 2006, not only the coupled WPT but also the WPT via radio frequency arises again to produce various commercial WPT applications. In the twenty-first century, the R&D of the WPT via radio frequency is not only beam-type WPT but also a WPT to multi-users with distributed weak electromagnetic wave like RF-ID, WPT in sheet and in pipe, and an energy harvesting from broadcasting waves.

Applications of the WPT via radio frequency beam are classified in the WPT systems as follows (Table A.1):

a) wide beam to multi-users at short range;

b) WPT in closed area;

c) narrow beam to single user at short/long range.

In Japan, the two-dimensional (2D) WPT system, which is one of WPT application in closed area, has been standardized in ARIB (Association of Radio Industries and Business) as ARIB STD-T113 [22]. Frequency is 2,498 GHz ± 1 MHz and its power is below 30 W.

Documents
Document Sharing Hub

Full document details: PD IEC/TR 62905:2018

Table A.1 – Classification of WPT applications

ID	Application	a) Wide beam to multi-users at short range	b) WPT in closed area	c) Narrow beam to single user at short/long range
a1	Wireless powered sensor network	○		
a2	Wireless charger of mobile devices	○		
b1	Wireless power transfer sheet		○	
b2	Wireless power provided in a pipe		○	
b3	Wireless power buildings Supported by MPT		○	
c1	WPT to moving/flying target			○
c2	Point-to-point WPT			○
c3	Wireless charging for electric vehicles			○
c4	Solar power satellite			○

The frequency bands for the WPT via radio frequency, which have already been used in field WPT experiments and in R&D of the WPT, are shown in Table A.2. These frequency bands are in ISM band (Industrial, Scientific and Medical band) in the world. Only 900 MHz band is in ISM band in Region 2 which covers the Americas including Greenland, and some of the eastern Pacific Islands.

Table A.2 – Characteristics of beam WPT applications

Type	ID	Applications	Frequency band	Condition	Distance	Power
a	a1	Wireless powered sensor network	915 MHz band, 2,45 GHz band, 5,8 GHz band	Indoor, Outdoor	Several metres to dozens of metres	< 50 W
	a2	Wireless charger of mobile devices	2,45 GHz band	Indoor	Several metres to dozens of metres	< 50 W
b	b1	Wireless power transfer sheet	2,498 GHz ± 1 MHz	In shielded sheet	Several metres (in sheet)	< 30 W
	b2	Wireless power provided in a pipe	2,45 GHz band, 5,8 GHz band	In shielded pipe	1 m to 100 m (in pipe)	< 50 W
	b3	Wireless power buildings Supported by MPT	2,45 GHz band, 5,8 GHz band	In shielded pipe underfloor	1 m to 100 m (in pipe)	50 W to 5 kW
c	c1	WPT to moving flying target	2,45 GHz band, 5,8 GHz band	Outdoor	100 m to 20 km	50 W to 1 MW
	c2	Point-to-point WPT	2,45 GHz band, 5,8 GHz band	Outdoor	1 m to 20 km	100 W to 1 MW
	c3	Wireless charging for electric vehicle	2,45 GHz band, 5,8 GHz band	Parking place	0,1 m to 1 m	100 kW to 500 kW
	c4	Solar power satellite	TBD	Space to ground	36 000 km	1,3 GW

AVA Documents
Document Sharing Hub

Full document details: PD IEC/TR 62905:2018

Annex B
(informative)

International exposure guidelines

B.1 ICNIRP guidelines

ICNIRP (International Commission on Non-Ionizing Radiation Protection) guidelines are one of the most widely accepted protection guidelines for human body exposure to electromagnetic fields. The guideline was first published in 1998 (ICNIRP1998) [4], and partially revised for low frequency region in 2010 (ICNIRP2010) [5] considering nervous system effect. In the frequency range from 100 kHz to 10 MHz, both guidelines need to be considered depending on exposure conditions.

In ICNIRP guidelines, basic restriction is defined based on the established health effects. ICNIRP1998 employs induced current density, specific absorption rate and power density as the metric for basic restrictions. On the other hand, ICNIRP2010 replaces the induced current density with an internal electric field (in situ electric field) as a metric of the basic restriction. Table B.1 and Table B.2 show the basic restrictions of ICNIRP1998 and ICNIRP2010.

Table B.1 – Basic restrictions up to 10 GHz of ICNIRP1998

Type of exposure	Frequency range	Current density for head and trunk (mA/m^2) (rms)	Whole-body average SAR (W/kg)	Localized SAR for head and trunk (W/kg)	Localized SAR for limbs (W/kg)
Occupational exposure	Up to 1 Hz	40	-	-	-
	1 Hz to 4 Hz	40/f	-	-	-
	4 Hz to 1 kHz	10	-	-	-
	1 kHz to 100 kHz	f/100	-	-	-
	100 kHz to 10 MHz	f/100	0,4	10	20
	10 MHz to 10 GHz		0,4		
General public exposure	Up to 1 Hz	8	-	-	-
	1 Hz to 4 Hz	8/f	-	-	-
	4 Hz to 1 kHz	2	-	-	-
	1 kHz to 100 kHz	f/500	-	-	-
	100 kHz to 10 MHz	f/500	0,08	2	4
	10 MHz to 10 GHz		0,08	2	4

f is the frequency in Hz.

Current density is averaged over a cross-section of 1 cm^2.

Localized SAR averaging mass is any 10 g of contiguous tissues.

Documents
Document Sharing Hub

Full document details: PD IEC/TR 62905:2018

Table B.2 – Basic restrictions of ICNIRP2010

Type of exposure	Target parts	Frequency range	Internal electric field (V/m)
Occupational exposure	CNS tissue of the head	1 Hz to 10Hz	$0,5/f$
		10 Hz to 25 Hz	0,05
		25 Hz to 400 Hz	$2 \times 10^{-3} f$
		400 Hz to 3 kHz	0,8
		3 kHz to 10 MHz	$2,7 \times 10^{-4} f$
	All tissues of head and body	1 Hz to 3 kHz	0,8
		3 kHz to 10 MHz	$2,7 \times 10^{-4} f$
General public exposure	CNS tissue of the head	1 Hz to 10 Hz	$0,1/f$
		10 Hz to 25 Hz	0,01
		25 Hz to 1 000 Hz	$0,4 \times 10^{-3} f$
		1 000 Hz to 3 kHz	0,4
		3 kHz to 10 MHz	$1,35 \times 10^{-4} f$
	All tissues of head and body	1 Hz to 3 kHz	0,4
		3 kHz to 10 MHz	$1,35 \times 10^{-4} f$
f is the frequency in Hz. All values are rms.			

Reference levels are provided for comparison with measured value of physical quantities such as incident electromagnetic fields. They are given for the condition of maximum coupling of the field to the exposed individual. Table B.3 and Table B.4 show the reference level of ICNIRP1998 and ICNIRP2010, respectively.

Documents
Document Sharing Hub
Full document details: PD IEC/TR 62905:2018

Table B.3 – Reference levels for electric and magnetic fields (unperturbed rms values) of ICNIRP1998

Type of exposure	Frequency range	Electric field strength (V/m)	Magnetic flux density (μT)
Occupational exposure	Up to 1 Hz		2×10^5
	1 Hz to 8 Hz	20 000	$2 \times 10^5/f^2$
	8 Hz to 25 Hz	20 000	$2{,}5 \times 10^4/f$
	0,025 kHz to 0,82 kHz	$500/f$	$25/f$
	0,82 kHz to 65 kHz	610	30,7
	0,065 MHz to 1 MHz	610	$2{,}0/f$
	1 MHz to 10 MHz	$610/f$	$2{,}0/f$
	10 MHz to 400 MHz	61	0,2
	400 MHz to 2 000 MHz	$3f^{1/2}$	$0{,}01f^{1/2}$
	2 GHz to 300 GHz	137	0,45
General public exposure	Up to 1 Hz		4×10^4
	1 Hz to 8 Hz	10 000	$4 \times 10^4/f^2$
	8 Hz to 25 Hz	10 000	$5\,000/f$
	0,025 kHz to 0,8 kHz	$250/f$	$5/f$
	0,8 kHz to 3 kHz	$250/f$	6,25
	3 kHz to 150 kHz	87	6,25
	0,15 MHz to 1 MHz	87	$0{,}92/f$
	1 MHz to 10 MHz	$84/f^{1/2}$	$0{,}92/f$
	10 MHz to 400 MHz	28	0,092
	400 MHz to 2 000 MHz	$1{,}375f^{1/2}$	$0{,}004\,6f^{1/2}$
	2 GHz to 300 GHz	61	0,20
f as indicated in the frequency range column.			

Table B.4 – Reference levels for electric and magnetic fields (unperturbed rms values) of ICNIRP2010

Type of exposure	Frequency range	Electric field strength (kV/m)	Magnetic flux density (T)
Occupational exposure	1 Hz to 8 Hz	20	$0{,}2/f^2$
	8 Hz to 25 Hz	20	$2{,}5 \times 10^{-2}/f$
	25 Hz to 300 Hz	$5 \times 10^2/f$	0,001
	300 Hz to 3 kHz	$5 \times 10^2/f$	$0{,}3/f$
	3 kHz to 10 MHz	0,17	0,000 1
General public exposure	1 Hz to 8 Hz	5	$4 \times 10^{-2}/f^2$
	8 Hz to 25 Hz	5	$5 \times 10^{-3}/f$
	25 Hz to 50 Hz	5	0,000 2
	50 Hz to 400 Hz	$2{,}5 \times 10^2/f$	0,000 2
	400 Hz to 3 kHz	$2{,}5 \times 10^2/f$	$0{,}08/f$
	3 kHz to 10 MHz	0,083	0,000 027
f is the frequency in Hz.			

Documents
Document Sharing Hub
Full document details: PD IEC/TR 62905:2018

Reference levels for contact current are also given in ICNIRP guidelines to avoid shock and burn hazards. The point contact reference levels are presented in Table B.5.

Table B.5 – Reference levels for contact currents of ICNIRP1998 and ICNIRP2010

Type of exposure	Frequency range	Maximum contact current (mA)
General public exposure	Up to 2,5 kHz	0,5
	2,5 kHz to 100 kHz	0,2f
	100 kHz to 110 MHz	20
Occupational exposure	Up to 2,5 kHz	1,0
	2,5 kHz to 100 kHz	0,4f
	100 kHz to 110 MHz	40
f is the frequency in kHz.		

B.2 IEEE standards

IEEE (Institute of Electrical and Electronics Engineers) International Committee on Electromagnetic Safety has two standards, in which their border frequency is 3 kHz; the standard for low frequency is C95.6 “IEEE Standard for Safety Levels With Respect to Human Exposure to Electromagnetic Fields, 0-3 kHz” issued in 2002 [6] and the standard for high frequency is C95.1 “IEEE Standard for Safety Levels with Respect to Human Exposure to Radio Frequency Electromagnetic Fields, 3 kHz to 300 GHz” revised in 2005 [7].

In IEEE standards, similar to ICNIRP guidelines, basic restrictions are defined based on the established health effects. Maximum permissible exposure (MPE) is also defined for electric fields, magnetic fields, derived from the basic restrictions. Table B.6 and Table B.7 show the basic restrictions of IEEE C95.6 and IEEE C95.1. MPEs for electric and magnetic fields are summarized in Tables B.8 to B.10.

Table B.6 – Basic restrictions up to 5 MHz of IEEE C95.6 and IEEE C95.1

Exposed parts	f_e (Hz)	E_0 (V/m-rms)	
		General public	Controlled environment
Brain	20	$5{,}89 \times 10^{-3}$	$1{,}77 \times 10^{-2}$
Heart	167	0,943	0,943
Hands, wrists, legs, ankles	3 350	2,10	2,10
Other tissue	3 350	0,701	2,10

From Table B.6, internal electric field is calculated as follows:

If frequency $f \leq f_e$ then $E_i = E_0$; if frequency $f \geq f_e$ then $E_i = E_0\ (f/f_e)$.

The magnetic field 10 Hz or less is limited to 167 mT and 500 mT for general public and controlled environment, respectively.

Documents
Document Sharing Hub
Full document details: PD IEC/TR 62905:2018