PD IEC TR 62933-200:2021

BSI Standards Publication

Electrical energy storage (EES) systems

Part 2-200: Unit parameters and testing methods — Case study of electrical energy storage (EES) systems located in EV charging station with PV

Documents
Document Sharing Hub

Full document details: PD IEC TR 62933-200:2021

National foreword

This Published Document is the UK implementation of IEC TR 62933-2-200:2021.

The UK participation in its preparation was entrusted to Technical Committee ESL/120, Electrical Energy Storage.

A list of organizations represented on this committee can be obtained on request to its committee manager.

Contractual and legal considerations

This publication has been prepared in good faith, however no representation, warranty, assurance or undertaking (express or implied) is or will be made, and no responsibility or liability is or will be accepted by BSI in relation to the adequacy, accuracy, completeness or reasonableness of this publication. All and any such responsibility and liability is expressly disclaimed to the full extent permitted by the law.

This publication is provided as is, and is to be used at the recipient's own risk.

The recipient is advised to consider seeking professional guidance with respect to its use of this publication.

This publication is not intended to constitute a contract. Users are responsible for its correct application.

This publication is not to be regarded as a British Standard.

© The British Standards Institution 2021
Published by BSI Standards Limited 2021

ISBN 978 0 539 15084 1

ICS 43.120; 27.160; 13.020.30

Compliance with a Published Document cannot confer immunity from legal obligations.

This Published Document was published under the authority of the Standards Policy and Strategy Committee on 31 October 2021.

Amendments/corrigenda issued since publication

Date	Text affected

Documents
Document Sharing Hub

Full document details: PD IEC TR 62933-200:2021

IEC TR 62933-2-200

Edition 1.0 2021-09

TECHNICAL REPORT

colour inside

Electrical energy storage (EES) systems – Part 2-200: Unit parameters and testing methods – Case study of electrical energy storage (EES) systems located in EV charging station with PV

INTERNATIONAL ELECTROTECHNICAL COMMISSION

ICS 13.020.30; 27.160; 43.120

ISBN 978-2-8322-1021-0

Warning! Make sure that you obtained this publication from an authorized distributor.

® Registered trademark of the International Electrotechnical Commission

Documents
Document Sharing Hub

Full document details: PD IEC TR 62933-200:2021

CONTENTS

FOREWORD 5
1 Scope 7
2 Normative references 7
3 Terms, definitions and abbreviated terms 7
3.1 Terms and definitions 7
3.2 Abbreviated terms 7
4 Overview of EES systems located in EV charging stations with PV power generation 8
4.1 General 8
4.2 Application scenarios 8
4.3 System communication architecture 9
4.4 Duty cycle analysis 10
5 Project of commercial PV-EES-EV charging station based on common DC bus 11
5.1 Case project overview 11
5.2 System operation and control 12
5.2.1 Operation data analysis 12
5.2.2 Operation mode analysis 13
5.3 Summary 15
6 Project of commercial PV-EES-EV charging station based on common AC bus 17
6.1 Case project overview 17
6.2 System operation and control 18
6.2.1 Operation data analysis 18
6.2.2 Operation mode analysis 19
6.3 Summary 21
7 Project of business PV-EES-EV charging station based on common DC bus 23
7.1 Case project overview 23
7.2 System operation and control 24
7.2.1 Operation data analysis 24
7.2.2 Operation mode analysis 25
7.3 Summary 27
8 Project of business PV-EES-EV charging station based on common AC bus 29
8.1 Case project overview 29
8.2 System operation and control 29
8.2.1 Operation data analysis 29
8.2.2 Operation mode analysis 30
8.3 Summary 33
9 Recommendation for operation modes of EES systems located in EV charging station with PV panels 34
Annex A (informative) Duty cycles of the EES systems located in EV charging station with PV 36
A.1 General 36
A.2 Project of commercial PV-EES-EV charging station based on common DC bus 36
A.3 Project of commercial PV-EES-EV charging station based on common AC bus 38
A.4 Project of business PV-EES-EV charging station based on common DC bus 45
Bibliography 47

AVA Documents
Document Sharing Hub

Full document details: PD IEC TR 62933-200:2021

Figure 1 – Example of communication system architecture of PV-EES-EV charging station 10
Figure 2 – System structure of case commercial PV-EES-EV charging station based on common DC bus 11
Figure 3 – EV load and PV power for the case of a commercial charging station based on common DC bus 12
Figure 4 – TOU and charging service prices for the case of a commercial charging station based on common DC bus 12
Figure 5 – Operating power in low- and medium-price periods in the case of a commercial charging station based on common DC bus 14
Figure 6 – Operating power in high-price periods in the case of commercial charging station based on common DC bus 15
Figure 7 – EES system duty cycle in the case of a commercial charging station based on common DC bus 15
Figure 8 – Daily electricity flow for the case of a commercial charging station based on common DC bus 17
Figure 9 – System structure for the case of a commercial PV-EES-EV charging station based on common AC bus 18
Figure 10 – EV load and PV power for the case of a commercial charging station based on common AC bus 19
Figure 11 – Operating power in power smoothing mode for the case of a commercial charging station based on common AC bus 19
Figure 12 – Operating power in peak shaving mode for the case of a commercial charging station based on common AC bus 20
Figure 13 – Operating power in the TOU price arbitrage mode for the case of a commercial charging station based on common AC bus 21
Figure 14 – EES duty cycle for the case of a commercial charging station based on common AC bus 22
Figure 15 – Daily electricity flow of for the case of a commercial charging station based on common AC bus 22
Figure 16 – System structure for the case of a business PV-EES-EV charging station based on common DC bus 23
Figure 17 – PV power, EV load and output power for the case of a business charging station based on common DC bus 24
Figure 18 – TOU and charging service prices for the case of a business charging station based on common DC bus 24
Figure 19 – Operating power in equivalent load tracing mode for the case of a business charging station based on common DC bus 25
Figure 20 – Operating power in TOU price arbitrage mode for the case of a business charging station based on common DC bus 26
Figure 21 – Operating power in demand response mode for the case of a business charging station based on common DC bus 27
Figure 22 – Operating power involved in TOU arbitrage and demand response for the case of a business charging station based on common DC bus 27
Figure 23 – EES duty cycle for the case of a business charging station based on common DC bus 28
Figure 24 – Daily electricity flow for the case of a business charging station based on common DC bus 28
Figure 25 – System structure for the case of a business PV-EES-EV charging station based on common AC bus 29

AVA Documents
Document Sharing Hub

Full document details: PD IEC TR 62933-200:2021

Figure 26 – EV load and PV power for the case of a business charging station based on common AC bus 30
Figure 27 – Simulation results for operation strategy 1 for the case of a business charging station based on common AC bus 31
Figure 28 – Simulation results for operation strategy 2 for the case of a business charging station based on common AC bus 31
Figure 29 – Simulation results for operation strategy 3 for the case of a business charging station based on common AC bus 33
Figure 30 – Three operation strategies and resultant operation modes of the EES system for the case of a business charging station based on common AC bus 33

Table 1 – Time division of EES system's operation modes in the case of a commercial charging station based on common DC bus 16
Table 2 – Time division of the EES system's operation modes for the case of a commercial charging station based on common AC bus 21
Table 3 – Time division of EES operation modes for the case of a business charging station based on common AC bus 34
Table 4 – Recommended operation modes of the EES system in various installation scenarios of a PV-EES-EV charging station 35
Table A.1 – Charging-discharging power of EES system for the case of a commercial charging station based on common DC bus (per-unit value) 36
Table A.2 – Charging-discharging power of EES system for the case of a commercial charging station based on common AC bus (per-unit value) 38
Table A.3 – Charging-discharging power of EES system for the case of a business charging station based on common DC (per-unit value) 45

Documents
Document Sharing Hub
Full document details: PD IEC TR 62933-200:2021

INTERNATIONAL ELECTROTECHNICAL COMMISSION

ELECTRICAL ENERGY STORAGE (EES) SYSTEMS –

Part 2-200: Unit parameters and testing methods – Case study of electrical energy storage (EES) systems located in EV charging station with PV

FOREWORD

1) The International Electrotechnical Commission (IEC) is a worldwide organization for standardization comprising all national electrotechnical committees (IEC National Committees). The object of IEC is to promote international co-operation on all questions concerning standardization in the electrical and electronic fields. To this end and in addition to other activities, IEC publishes International Standards, Technical Specifications, Technical Reports, Publicly Available Specifications (PAS) and Guides (hereafter referred to as "IEC Publication(s)"). Their preparation is entrusted to technical committees; any IEC National Committee interested in the subject dealt with may participate in this preparatory work. International, governmental and non-governmental organizations liaising with the IEC also participate in this preparation. IEC collaborates closely with the International Organization for Standardization (ISO) in accordance with conditions determined by agreement between the two organizations.
2) The formal decisions or agreements of IEC on technical matters express, as nearly as possible, an international consensus of opinion on the relevant subjects since each technical committee has representation from all interested IEC National Committees.
3) IEC Publications have the form of recommendations for international use and are accepted by IEC National Committees in that sense. While all reasonable efforts are made to ensure that the technical content of IEC Publications is accurate, IEC cannot be held responsible for the way in which they are used or for any misinterpretation by any end user.
4) In order to promote international uniformity, IEC National Committees undertake to apply IEC Publications transparently to the maximum extent possible in their national and regional publications. Any divergence between any IEC Publication and the corresponding national or regional publication shall be clearly indicated in the latter.
5) IEC itself does not provide any attestation of conformity. Independent certification bodies provide conformity assessment services and, in some areas, access to IEC marks of conformity. IEC is not responsible for any services carried out by independent certification bodies.
6) All users should ensure that they have the latest edition of this publication.
7) No liability shall attach to IEC or its directors, employees, servants or agents including individual experts and members of its technical committees and IEC National Committees for any personal injury, property damage or other damage of any nature whatsoever, whether direct or indirect, or for costs (including legal fees) and expenses arising out of the publication, use of, or reliance upon, this IEC Publication or any other IEC Publications.
8) Attention is drawn to the Normative references cited in this publication. Use of the referenced publications is indispensable for the correct application of this publication.
9) Attention is drawn to the possibility that some of the elements of this IEC Publication may be the subject of patent rights. IEC shall not be held responsible for identifying any or all such patent rights.

IEC 62933-2-200 has been prepared by IEC technical committee TC 120: Electrical Energy Storage (EES) Systems. It is a Technical Report.

The text of this Technical Report is based on the following documents:

Draft	Report on voting
120/231/DTR	120/238/RVDTR

Full information on the voting for its approval can be found in the report on voting indicated in the above table.

The language used for the development of this Technical Report is English.

Documents
Document Sharing Hub

Full document details: PD IEC TR 62933-200:2021

This document was drafted in accordance with ISO/IEC Directives, Part 2, and developed in accordance with ISO/IEC Directives, Part 1 and ISO/IEC Directives, IEC Supplement, available at www.iec.ch/members_experts/refdocs. The main document types developed by IEC are described in greater detail at www.iec.ch/standardsdev/publications.

A list of all parts in the IEC 62933 series, published under the general title *Electrical energy storage (EES) systems*, can be found on the IEC website.

The committee has decided that the contents of this document will remain unchanged until the stability date indicated on the IEC website under webstore.iec.ch in the data related to the specific document. At this date, the document will be

- reconfirmed,
- withdrawn,
- replaced by a revised edition, or
- amended.

IMPORTANT – The "colour inside" logo on the cover page of this document indicates that it contains colours which are considered to be useful for the correct understanding of its contents. Users should therefore print this document using a colour printer.

Documents
Document Sharing Hub

Full document details: PD IEC TR 62933-200:2021

ELECTRICAL ENERGY STORAGE (EES) SYSTEMS –

Part 2-200: Unit parameters and testing methods – Case study of electrical energy storage (EES) systems located in EV charging station with PV

1 Scope

This part of IEC 62933, which is a Technical Report, presents a case study of electrical energy storage (EES) systems located in electric vehicle (EV) charging stations with photovoltaic (PV) power generation (PV-EES-EV charging stations) with a voltage level of 20 kV and below. EES systems are highlighted in this document because they are a desired option to make the charging stations (especially the high-power fast charging stations) grid-friendly, improve the self-consumption of clean energy generation, and increase the revenue of stations. In this application, EES systems show excellent performance by running in a variety of available operating modes, such as peak shaving, power smoothing, load tracing, time-of-use (TOU) price arbitrage, and ancillary services. The general duty cycle is recommended based on the summary of the operation characteristics of the EES systems.

This document includes the following elements:

– overview of general PV-EES-EV charging stations;
– operational analysis of EES systems in typical project cases;
– summary and recommendation of EES systems' operation modes.

2 Normative references

The following documents are referred to in the text in such a way that some or all of their content constitutes requirements of this document. For dated references, only the edition cited applies. For undated references, the latest edition of the referenced document (including any amendments) applies.

IEC 62933-1, *Electrical energy storage (EES) systems – Part 1: Vocabulary*

3 Terms, definitions and abbreviated terms

3.1 Terms and definitions

For the purposes of this document, the terms and definitions given in IEC 62933-1 apply.

ISO and IEC maintain terminological databases for use in standardization at the following addresses:

- IEC Electropedia: available at http://www.electropedia.org/
- ISO Online browsing platform: available at http://www.iso.org/obp

3.2 Abbreviated terms

AC Alternating current

BAMS Battery array management system

BCMU Battery cluster measurement unit

BMU Battery measurement unit

Documents
Document Sharing Hub

Full document details: PD IEC TR 62933-200:2021

CAN Controller area network
DC Direct current
EES Electrical energy storage
EMS Energy management system
EV Electric vehicle
EVSE Electric vehicle supply equipment
PCS Power conversion system
POC Point of connection
PV Photovoltaic
SOC State of charge
TOU Time-of-use
V2G Vehicle-to-grid

4 Overview of EES systems located in EV charging stations with PV power generation

4.1 General

The growing problems of climate change and environmental degradation on a global scale are the great challenges faced by people all over the world. Electric vehicles (EVs), which help reduce dependence on fossil fuels, are the key to advancing energy transition in the transportation sector. The convenience of charging has always been an important factor that affects whether consumers consider electric vehicles as an option. In recent years, EV charging infrastructures, especially the commercial charging stations and the business charging stations, have achieved rapid growth.

The integration of renewable power generation in the charging stations is conducive to further improving the use of clean energy while reducing the energy cost of the charging stations. Limited by the size of the site, PV power generation is often the primary choice for the charging stations. PV panels can be deployed on the roof of the station or integrated on the top of the charging infrastructure according to local conditions, which show significant advantages over wind turbines. However, both PV power and EV charging load are highly uncertain, and the charging demand of EV users during peak hours sometimes has a huge impact on the stable operation of the external power grid. EES systems can smooth the charging load of EV users and promote the local consumption of PV power generation. As for the operation of the charging station, EES systems can delay the expansion of the transformer at the charging station due to the rapidly increasing load, achieve peak-valley arbitrage according to TOU prices, and even assist the charging station to participate in ancillary service of the power grid.

The integration of PV and EES systems is the development trend of the EV charging stations. Many countries in the world, such as China, the United States, Germany, the United Kingdom, and Australia, have deployed the projects of EV charging stations integrated with PV and EES systems.

4.2 Application scenarios

Some PV-EES-EV charging stations are designed to operate off-grid, where the PV system provides the initial energy and the EES system serves as the storage place for electricity and timely power EVs. The entire station does not exchange energy with the external grid. At a charging station that operates in this mode, the capacity of EES systems is the key parameter that directly determines how many EVs can continue to serve.

Compared with the off-grid ones, the more common operation modes of charging stations are based on grid-connected operation. In this case, the charging needs of EV owners are always met even if the installed capacity of the EES system and PV is not sufficient. These kinds of

AVA Documents
Document Sharing Hub

charging facilities are widely deployed in residents' homes, parking lots, highway service areas and other places with high traffic flow.

In the grid-connected charging stations, EES systems can operate in a variety of modes, such as load tracing, peak shaving, power smoothing, TOU price arbitrage, and ancillary service, rather than simply balancing PV generation and charging load as in off-grid settings.

After investigating a large number of charging stations around the world, four typical application scenarios for the grid-connected PV-EES-EV charging stations from the perspective of electrical structure were found, namely commercial charging stations with common direct current (DC) bus, commercial charging stations with common alternating current (AC) bus, business charging stations with common DC bus, and business charging stations with common AC bus.

The main purpose of commercial charging stations is to provide charging services for general EV users and obtain economic revenues. In general, the commercial charging station is an independent interest subject and can be seen as a general load from the grid point of view due to the forbidden power feedback to the external grid in most cases. In this document, two practical cases are discussed in Clause 5 and Clause 6, respectively. In Clause 5, a DC common bus based PV-EES-EV charging station is introduced. The EES system in this station plays the role of load tracing and TOU price arbitrage. Alternatively, the PV-EES-EV charging station in Clause 6 is an AC common bus based station, and the EES system of this station mainly operates in power smoothing, peak shaving and TOU price arbitrage mode.

Business charging stations generally refer to charging stations built alongside commercial malls, office buildings, communities, campuses, which can not only provide services for EVs, but also power the surrounding load. In Clause 7, a common DC bus based PV-EES-EV charging station is analysed, where the EES system plays a comprehensive role in load tracing, TOU price arbitrage, and demand response. The entire charging station also undertakes the task of supplying power to a nearby shopping mall in the price peak time periods. At last, in Clause 8 a common AC bus based business charging project sponsored by the U.S. Department of Energy is introduced and the operation modes of one of the charging stations in this project are elaborated.

4.3 System communication architecture

Figure 1 shows a typical architecture of the communication system of a grid-connected EV charging station integrated with the PV and EES system in China. The battery energy management system is divided into three levels, namely the battery array management system (BAMS), battery cluster measurement unit (BCMU), and battery measurement unit (BMU). The controller area network (CAN) is used for information exchange between the upper and the lower management systems/measurement units. Only the highest level of BAMS communicates with the power conversion system (PCS) via RS 485. PV panels are linked to the PV controller through the convergence box. For unification, all components in the EV charging system communicate through CAN. The PV controller, battery PCS, and electric vehicle supply equipment (EVSE) are connected to the charging station's energy management system (station-EMS). The station-EMS responds to the commands of the external distribution network according to IEC 60870-5-104.

Documents
Document Sharing Hub

Full document details: PD IEC TR 62933-200:2021

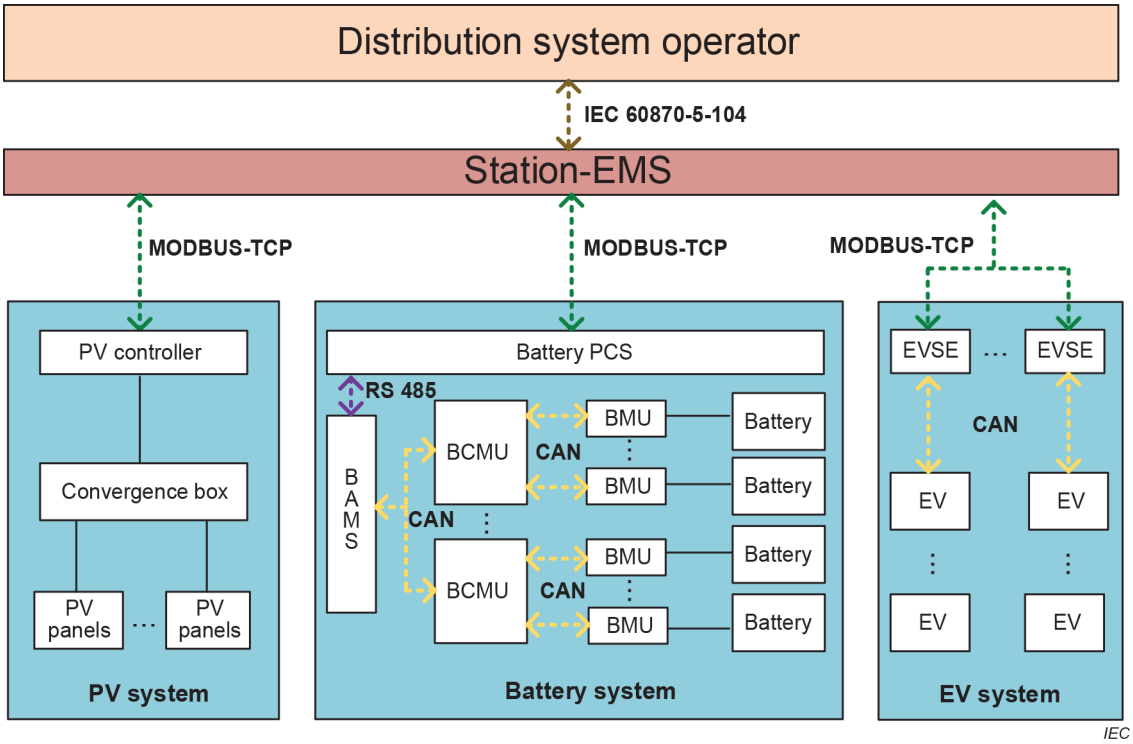

Figure 1 – Example of communication system architecture of PV-EES-EV charging station

Note that the above communication structure and protocols in Figure 1 are only intended as a typical demonstration for the cases practically adopted in China. In fact, some other open and interoperable protocols are also available. For example, IEC 61851 (all parts), ISO 15118 (all parts), CHAdeMO 2.0, and IEEE 2030.5 can be used as alternative protocols between EV and EVSE. In terms of the communication between the station-EMS and EV system, battery system, and PV system, IEC 61850 (all parts) is a good option to provide a higher level of security against unauthorized commands or interception of data.

4.4 Duty cycle analysis

A duty cycle is a charge/discharge profile that represents the demands placed on an EES system by a specific application. The duty cycle for the EES system in the EV charging station with PV panels will take into account how an EES system operates in a set cycle to make the charging station operate more efficiently.

Because the charging load of the charging station and PV power generation is random, and there are peak and valley periods, it is necessary to provide a 24 h duty cycle for the operation of the EES system to better provide energy for the charging station.

The following procedure is generally used to configure the duty cycle of an EES system in PV-EES-EV charging stations.

- Step 1: The charging stations are classified according to the collected data, which include PV data, EES system data, point of connection (POC) data, and load data.
- Step 2: The PV, EES system, POC, and load data are processed separately, which mainly includes filling in the missing data and making the sampling intervals of the four types of data the same.
- Step 3: The operation modes of the EES system in PV-EES-EV charging stations are analysed, and the corresponding operation curve is extracted according to different operation modes. Different methods are used for different operating modes to calculate their respective EES system operating curves.

AVA Documents
Document Sharing Hub

- Step 4: The 24 h working curves under each operation mode are synthesized, and the typical duty cycle of the EES system is extracted.

5 Project of commercial PV-EES-EV charging station based on common DC bus

5.1 Case project overview

The electricity both generated by PV panels and required by EVs is in the form of direct current, and so are batteries. In order to reduce energy loss, many charging stations are deployed as DC systems. One of the typical representatives is the PV-EES-EV charging station. Figure 2 shows the electrical structure of a commercial PV-EES-EV charging station located in China.

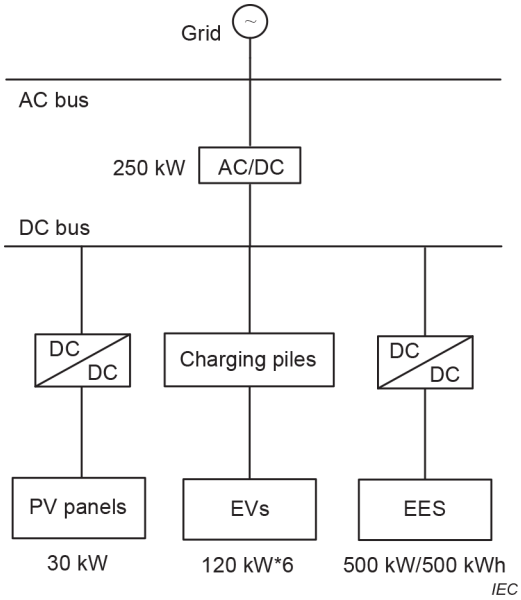

Figure 2 – System structure for the case of a commercial PV-EES-EV charging station based on common DC bus

This project is equipped with a DC bus to connect major in-station equipment, including 30 kW PV panels, 500 kW/500 kWh EES system and 6 DC fast charging piles. The maximum power of each pile can reach 120 kW. The charging station is connected to the AC bus with an AC/DC converter, through which it can purchase electricity from the external grid. However, the charging station is not allowed to inject power to the external power grid. In other words, the station is just a general load from the power grid view.

The main purpose for installing an EES system in this station is to meet the demand for fast charging and provide quality service without increasing the load demand on the external power grid of the charging station. If an EES system is not deployed, the service limit of the charging station is 250 kW based on the capacity of the AC/DC grid-connected converter in the case where the PV power output is zero. With the help of the EES system, the charging station can meet the charging demand up to 750 kW. In practice, the maximum power of the EES system is set to 250 kW (50 % of maximum output rating) under normal operating conditions to extend the service life of the batteries. In an emergency situation when the charging load exceeds the total power supply capacity of PV panels, EES, and the external grid, the EES system is allowed to run in the range of 250 kW to 500 kW.

Documents
Document Sharing Hub
Full document details: PD IEC TR 62933-200:2021

5.2 System operation and control

5.2.1 Operation data analysis

The historical data of power generation and consumption on a typical day are illustrated in Figure 3. PV panels generate electricity mainly between 7:00 and 18:00. EV charging service is available 24 h a day. Figure 4 shows the TOU price and EV charging service tariffs for that day.

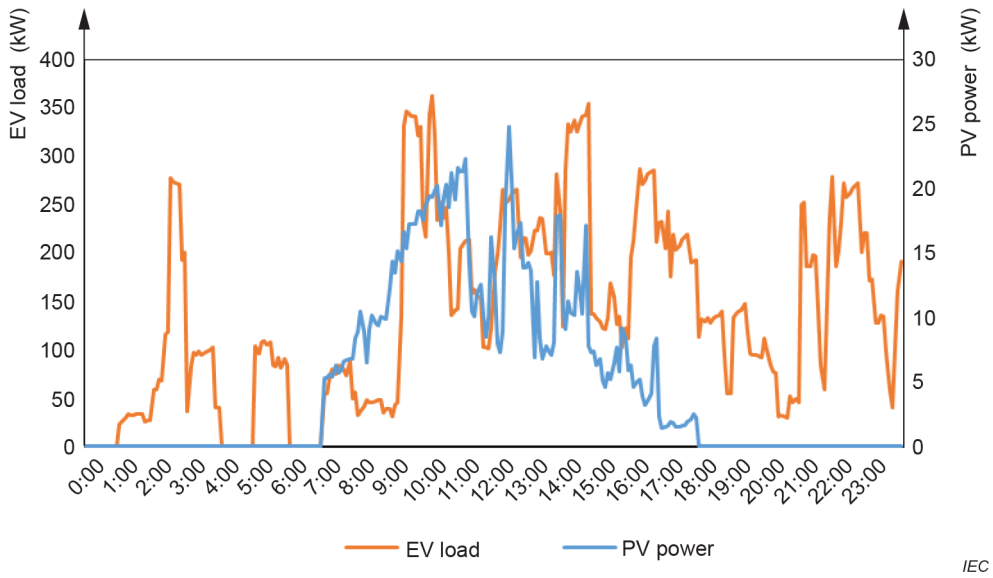

Figure 3 – EV load and PV power for the case of a commercial charging station based on common DC bus

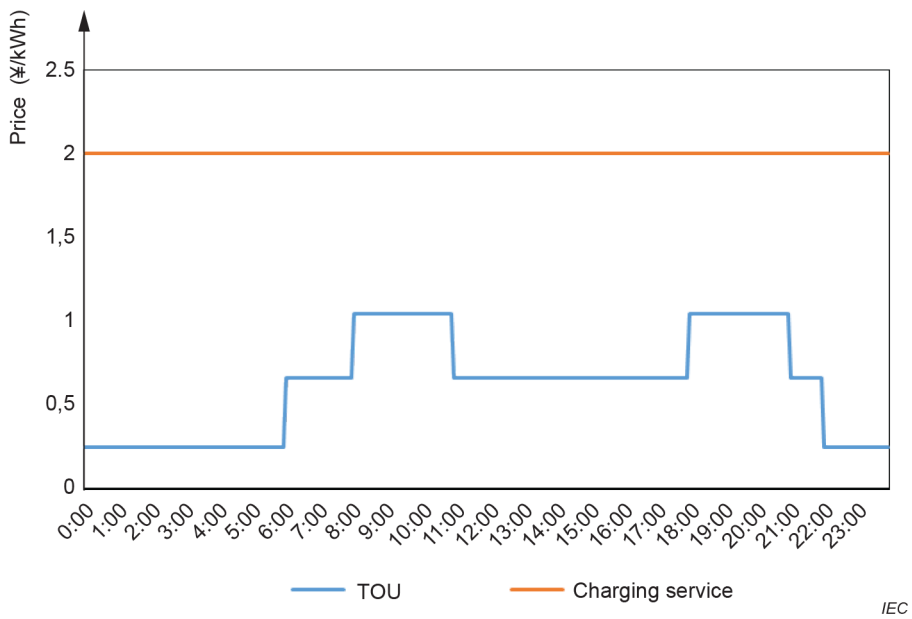

Figure 4 – TOU and charging service prices for the case of a commercial charging station based on common DC bus

Documents
Document Sharing Hub
Full document details: PD IEC TR 62933-200:2021

5.2.2 Operation mode analysis

5.2.2.1 General

The EES system is able to absorb electricity from the external power grid during the low-price periods and release it when the price rises. Due to the fact that the EV charging load is unknown (this station is not equipped with a charging load prediction system); the reserve energy in the EES system has to be relatively large to avoid such a case as the state of charge (SOC) of EES falling below the allowable lowest when many cars are coming to charge at the same time. In this project, the minimal state of charge (SOC) of the EES system is set to 32 % for an unexpected charging situation. When the peak-price periods come, it is ensured that enough electricity (95 % of the rated capacity of EES system in this project) is already stored in the batteries.

The EES system in this charging station plays the role of equivalent charging load tracing and TOU price arbitrage. Equivalent load is the difference between the EV charging load and PV power. In the low-price and medium-price periods, the charging load demand of electric vehicles is mainly satisfied by the external power grid, and the EES system is expected to supplement the stored electricity while the charging demand exceeds the sum of the capacity of the AC/DC grid-connected converter and the PV power. In the high-price periods, the EES system focuses on tracking the equivalent EV charging load. When the EES power is insufficient, the extra EV charging load is provided by the external power grid.

5.2.2.2 TOU price arbitrage mode

The TOU price arbitrage mode is mainly concentrated in low- and medium-price periods, i.e., 0:00 to 8:00, 11:00 to 18:00, and 21:00 to 24:00 (Figure 4). The equivalent load equals the EV charging load minus the PV output. The battery power is positive in the discharging mode and negative in the charging mode. The grid power is positive when the charging station gets power from the external power grid.

During these periods, the EES system is basically in the charging mode due to the relatively low price, and the external grid satisfies the equivalent EV charging load. When the equivalent load is below 250 kW, it is completely satisfied by the external power grid. At the same time, if the SOC of the EES system has not reached 95 %, it is in charging mode. The charging power of the EES system equals 250 kW (the capacity limit of the AC/DC grid-connected converter) minus the equivalent load. However, when the equivalent load demand exceeds 250 kW, for example, from 2:30 to 2:45 in Figure 5a), or from 14:05 to 14:45 in Figure 5b), the excess EV charging load is supplied by the EES system. In this case, the EES system is in discharging mode.

Note that the EES system is in the standby mode from 21:00 to 22:00 (as shown in Figure 5c)), in which the EES system does not charge and only discharges when the EV load exceeds the limit of 250 kW. The reason is that it achieves more cost savings to delay the charging behaviour of the EES system to a later low-price period (from 22:00 to 6:00 of the next day) than to charge during the medium-price period (from 21:00 to 22:00). However, during other medium-price periods, for example from 11:00 to 18:00, the EES system needs to charge in preparation for discharging at the later high-price period of the day.

Documents
Document Sharing Hub
Full document details: PD IEC TR 62933-200:2021

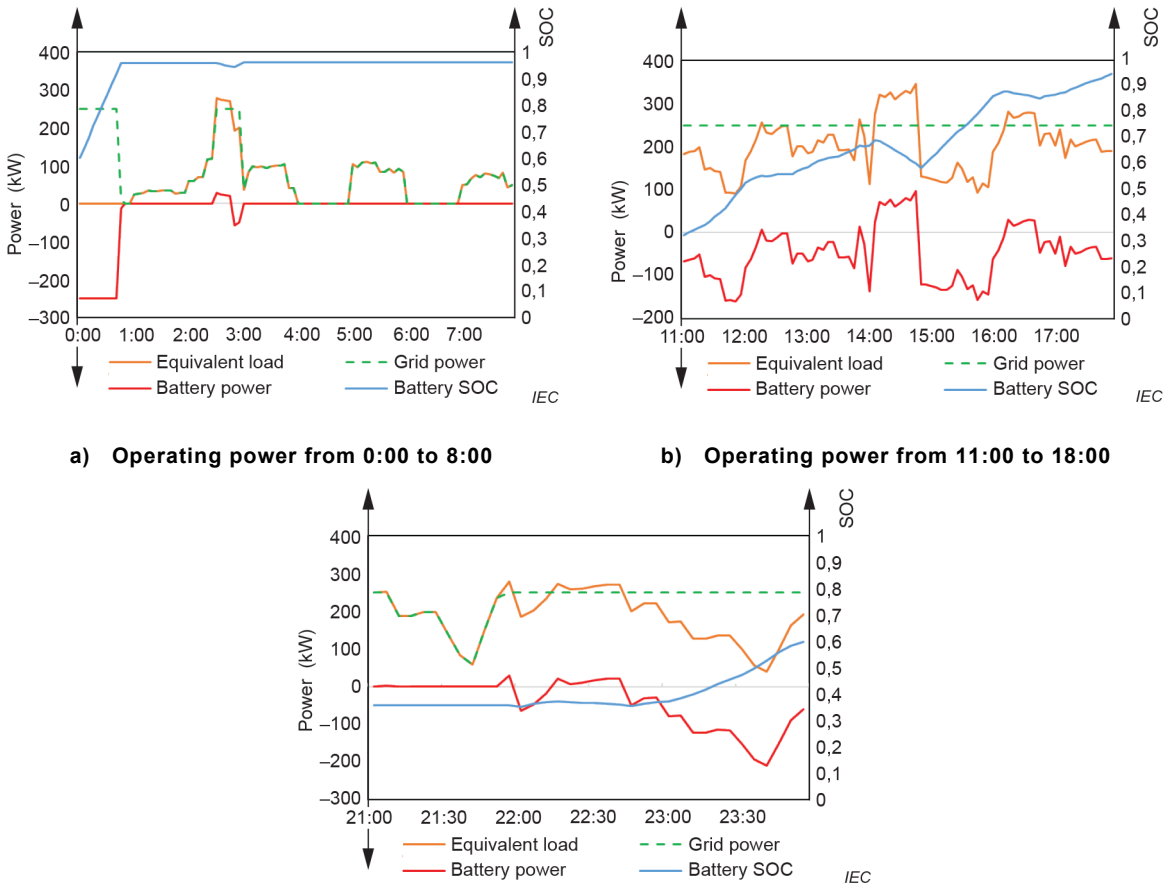

a) **Operating power from 0:00 to 8:00**

b) **Operating power from 11:00 to 18:00**

c) **Operating power from 21:00 to 24:00**

Figure 5 – Operating power in low- and medium-price periods for the case of a commercial charging station based on common DC bus

5.2.2.3 Equivalent load tracing mode

In high-price periods the EES system operates in the equivalent load tracing mode, as shown in Figure 6. Figure 6a) shows the operation power from 8:00 to 11:00, and Figure 6b) shows the operation power from 18:00 to 21:00. The EV charging load is first supplied by the EES system. In order to extend the service life of batteries, the discharging power of the EES system is limited to 250 kW. The part of the charging demand that exceeds this value is provided by the external grid, as shown in Figure 6a), for example between 9:20 and 9:50. If the charging load is large and exceeds 500 kW, then the EES system will supply the excess during the time period (this situation did not happen in this case). What needs to be pointed out is that when the SOC of the EES system reaches the lower limit of 32 %, the EES system stops discharging and the equivalent load is satisfied by the external power grid, for example between 10:25 and 11:00.

Documents
Document Sharing Hub
Full document details: PD IEC TR 62933-200:2021