PD IEC TR 63141:2020

BSI Standards Publication

Damp heat, steady state (unsaturated pressurized vapour with air)

Documents
Document Sharing Hub

Full document details: PD IEC TR 63141:2020

National foreword

This Published Document is the UK implementation of IEC TR 63141:2020.

The UK participation in its preparation was entrusted to Technical Committee GEL/104, Environmental conditions, classification and testing.

A list of organizations represented on this committee can be obtained on request to its secretary.

This publication does not purport to include all the necessary provisions of a contract. Users are responsible for its correct application.

© The British Standards Institution 2020
Published by BSI Standards Limited 2020

ISBN 978 0 580 98925 4

ICS 19.040

Compliance with a British Standard cannot confer immunity from legal obligations.

This Published Document was published under the authority of the Standards Policy and Strategy Committee on 30 April 2020.

Amendments/corrigenda issued since publication

Date	Text affected

Documents
Document Sharing Hub

Full document details: PD IEC TR 63141:2020

IEC TR 63141

Edition 1.0 2020-04

TECHNICAL REPORT

colour inside

Damp heat, steady state (unsaturated pressurized vapour with air)

INTERNATIONAL
ELECTROTECHNICAL
COMMISSION

ICS 19.040

ISBN 978-2-8322-8090-4

Warning! Make sure that you obtained this publication from an authorized distributor.

® Registered trademark of the International Electrotechnical Commission

Documents
Document Sharing Hub

Full document details: PD IEC TR 63141:2020

CONTENTS

FOREWORD 5
INTRODUCTION 7
1 Scope 8
2 Normative references 8
3 Terms and definitions 8
4 Overview of HAST and air-HAST 9
4.1 Overview of HAST chamber 9
4.1.1 Structure of HAST chamber 9
4.1.2 Definition of humidity 10
4.2 Structure of air-HAST equipment 12
4.2.1 General 12
4.2.2 Air concentration and relative humidity 14
5 Evaluation of tin whisker growth from lead-free plating and solder-joints 14
5.1 Whisker of lead-free solder (comb-type substrate) 14
5.1.1 General 14
5.1.2 Summary of evaluation results of solder-joint whisker growth [3] [4] 15
5.1.3 Conclusion 24
5.2 Lead-free whisker of plating (mounting substrate) 25
5.2.1 General 25
5.2.2 Test method 25
5.2.3 Test results 26
5.2.4 Observations 27
5.2.5 Conclusion 29
6 Applied case of JISSO using electrically-conductive adhesive and acceleration test under humidity environments for joining parts 29
6.1 General 30
6.2 Experiment method 30
6.2.1 Testing material 30
6.2.2 Test conditions 30
6.2.3 Measurement and evaluation method 31
6.3 Test results 31
6.3.1 Experimental result 31
6.3.2 Test result (1608R/paste A) 36
6.4 Points of attention 38
6.5 Summary 38
7 Applied air-HAST to c-Si PV modules evaluation tests 39
7.1 Background and objective 39
7.2 Photovoltaic module structure and deterioration factors 39
7.3 Test methods 40
7.3.1 Crystalline silicon photovoltaic module type-approval international standard 40
7.3.2 Air-HAST work 41
7.3.3 Test samples 41
7.3.4 Test conditions 42
7.3.5 Measurement and analysis 44
7.4 Test results 44
7.4.1 DHT testing 44

AVA Documents
Document Sharing Hub

7.4.2 Saturated HAST 46
7.4.3 Air-HAST 47
7.4.4 External appearance comparison 48
7.4.5 Use of dark I-V measurement to infer deterioration factors 50
7.4.6 Use of ion chromatography to quantify residual acetic acid ions 50
7.5 Discussion 51
7.5.1 Environment test method comparisons 51
7.5.2 Power-loss profiles by moisture permeation 52
7.5.3 Comparisons by ion chromatography acetic acid quantification 52
7.6 Conclusion 53
8 Summary 54
Bibliography 55

Figure 1 – Two types of HAST equipment and their structures 9
Figure 2 – Image of air vent process 11
Figure 3 – Saturated test 11
Figure 4 – Unsaturated test 12
Figure 5 – Structure of two-vessel type air-HAST chamber 13
Figure 6 – Structure of one-vessel type air-HAST chamber 14
Figure 7 – Example of test vehicle with comb pattern 15
Figure 8 – Process flow for sample build 16
Figure 9 – Temperature/relative humidity profiles of HAST and air-HAST 17
Figure 10 – Whisker generation situation in air-HAST 19
Figure 11 – Mapping of the cross-section at the solder fillet in HAST 20
Figure 12 – Mapping of the cross-section at the solder fillet in air-HAST 20
Figure 13 – Arrhenius plot of the bromine-based flux 22
Figure 14 – Reciprocal of relative humidity of whisker generation on solder 22
Figure 15 – Humidity properties of whisker generation on solder (pt.2) 23
Figure 16 – Evaluated sample 25
Figure 17 – Whisker formation (Substrate: Cu) 27
Figure 18 – Cross-section inspection results with electron-imaging (Substrate: Cu) 28
Figure 19 – Elements analysis 29
Figure 20 – Substrate for conductive resistance measurement and example of component mounting 30
Figure 21 – Humidity test conductive resistance monitor test status 31
Figure 22 – Example of the conductive resistance value change 32
Figure 23 – Weibull plot of temperature acceleration (under fixed humidity conditions) 32
Figure 24 – Arrhenius plot (fixed humidity) 33
Figure 25 – Weibull plot of humidity acceleration (under fixed temperature conditions) 34
Figure 26 – Arrhenius plot (fixed temperature) 35
Figure 27 – Eyring plot of all conditions 35
Figure 28 – Comparison of paste (120 °C/85 % RH Air-HAST) 36
Figure 29 – Cross-section analysis of 1608R after a humidity test (SEM image) 37
Figure 30 – Magnified image of cross-section analysis of 1608R after a humidity test (SEM image) 37

AVA Documents
Document Sharing Hub

Figure 31 – Cross-section analysis of 1608R after a humidity test (SEM image) and examples of componential analysis by EDX 38
Figure 32 – Structure of c-Si PV module 40
Figure 33 – Qualification test sequence in IEC 61215-1 [23] 41
Figure 34 – Appearance of modules 42
Figure 35 – EL images after DHT 45
Figure 36 – Degradation profiles with DHT 46
Figure 37 – EL images of HAST 105 °C/100 % RH 46
Figure 38 – EL images after HAST 120 °C/100 % RH 47
Figure 39 – Degradation profiles with HAST 47
Figure 40 – EL images after air-HAST 48
Figure 41 – Degradation profiles with air-HAST 48
Figure 42 – Appearance of modules after each test 49
Figure 43 – Dark I-V 50
Figure 44 – Residue of acetate ion and retention of P_{max} after each test 51

Table 1 – Test conditions 15
Table 2 – Influence of fluxes and circumstances to whisker growth 18
Table 3 – Whisker generation in HAST 18
Table 4 – Whisker generation in air-HAST 19
Table 5 – Comparison of coefficients for Equations (5), (6) and (7) 24
Table 6 – Details of evaluated samples 26
Table 7 – Lead frames composition 26
Table 8 – Environmental test conditions 26
Table 9 – Electrically-conductive adhesives 30
Table 10 – Testing material 31
Table 11 – Test conditions 36
Table 12 – Example of failure modes of PV module via materials 40
Table 13 – Specifications of materials used in PV module 42
Table 14 – Test conditions 43
Table 15 – Test conditions and partial pressures 43

Documents
Document Sharing Hub

Full document details: PD IEC TR 63141:2020

INTERNATIONAL ELECTROTECHNICAL COMMISSION

DAMP HEAT, STEADY STATE (UNSATURATED PRESSURIZED VAPOUR WITH AIR)

FOREWORD

1) The International Electrotechnical Commission (IEC) is a worldwide organization for standardization comprising all national electrotechnical committees (IEC National Committees). The object of IEC is to promote international co-operation on all questions concerning standardization in the electrical and electronic fields. To this end and in addition to other activities, IEC publishes International Standards, Technical Specifications, Technical Reports, Publicly Available Specifications (PAS) and Guides (hereafter referred to as "IEC Publication(s)"). Their preparation is entrusted to technical committees; any IEC National Committee interested in the subject dealt with may participate in this preparatory work. International, governmental and non-governmental organizations liaising with the IEC also participate in this preparation. IEC collaborates closely with the International Organization for Standardization (ISO) in accordance with conditions determined by agreement between the two organizations.
2) The formal decisions or agreements of IEC on technical matters express, as nearly as possible, an international consensus of opinion on the relevant subjects since each technical committee has representation from all interested IEC National Committees.
3) IEC Publications have the form of recommendations for international use and are accepted by IEC National Committees in that sense. While all reasonable efforts are made to ensure that the technical content of IEC Publications is accurate, IEC cannot be held responsible for the way in which they are used or for any misinterpretation by any end user.
4) In order to promote international uniformity, IEC National Committees undertake to apply IEC Publications transparently to the maximum extent possible in their national and regional publications. Any divergence between any IEC Publication and the corresponding national or regional publication shall be clearly indicated in the latter.
5) IEC itself does not provide any attestation of conformity. Independent certification bodies provide conformity assessment services and, in some areas, access to IEC marks of conformity. IEC is not responsible for any services carried out by independent certification bodies.
6) All users should ensure that they have the latest edition of this publication.
7) No liability shall attach to IEC or its directors, employees, servants or agents including individual experts and members of its technical committees and IEC National Committees for any personal injury, property damage or other damage of any nature whatsoever, whether direct or indirect, or for costs (including legal fees) and expenses arising out of the publication, use of, or reliance upon, this IEC Publication or any other IEC Publications.
8) Attention is drawn to the Normative references cited in this publication. Use of the referenced publications is indispensable for the correct application of this publication.

The main task of IEC technical committees is to prepare International Standards. However, a technical committee may propose the publication of a Technical Report when it has collected data of a different kind from that which is normally published as an International Standard, for example "state of the art".

IEC TR 63141, which is a Technical Report, has been prepared by IEC technical committee 104: Environmental conditions, classification and methods of test.

The text of this Technical Report is based on the following documents:

Draft TR	Report on voting
104/834/DTR	104/853A/RVDTR

Full information on the voting for the approval of this Technical Report can be found in the report on voting indicated in the above table.

This document has been drafted in accordance with the ISO/IEC Directives, Part 2.

Documents
Document Sharing Hub

Full document details: PD IEC TR 63141:2020

The committee has decided that the contents of this document will remain unchanged until the stability date indicated on the IEC website under "http://webstore.iec.ch" in the data related to the specific document. At this date, the document will be

- reconfirmed,
- withdrawn,
- replaced by a revised edition, or
- amended.

IMPORTANT – The 'colour inside' logo on the cover page of this publication indicates that it contains colours which are considered to be useful for the correct understanding of its contents. Users should therefore print this document using a colour printer.

Documents
Document Sharing Hub

Full document details: PD IEC TR 63141:2020

INTRODUCTION

Highly accelerated stress test (HAST), is a high temperature (100 °C or more), high humidity steady test of unsaturated pressurized steam of 85 % RH, and is the original test method that was developed for the evaluation of corrosion of packaged semiconductor wiring. This test method, often referred to as HAST, is applied to primarily non-hermetically sealed small electronic components, and has been standardized as a standard test method for evaluating, in an accelerated manner, the resistance to the deteriorative effect of high temperature and high humidity (IEC 60068-2-66). The equipment used for this test method is a chamber, filled with unsaturated water vapour, called a HAST chamber.

However, in life evaluation test conditions, acceleration cannot be obtained without air from the environment being incorporated into the HAST chamber. This test method is referred to as air-HAST.

Examples of the application of air-HAST are whiskers evaluation of lead-free solder, deterioration life evaluation of conductive paste, and deterioration life evaluation of solar cells and are given in this document in order to provide an understanding of air-HAST with the aim, in future, to standardize air-HAST.

The International Electrotechnical Commission (IEC) draws attention to the fact that it is claimed that compliance with this document may involve the use of a patent concerning whisker evaluation given in Clause5.

IEC takes no position concerning the evidence, validity and scope of this patent right.

The holder of this patent right has assured the IEC that he/she is willing to negotiate licences under reasonable and non-discriminatory terms and conditions with applicants throughout the world. In this respect, the statement of the holder of this patent right is registered with IEC. Information may be obtained from:

ESPEC CORP.
3-5-6,Tenjinbashi,Kita-ku
Osaka,530-8550
Japan

Attention is drawn to the possibility that some of the elements of this document may be the subject of patent rights other than those identified above. IEC shall not be held responsible for identifying any or all such patent rights.

ISO (www.iso.org/patents) and IEC (http://patents.iec.ch) maintain on-line data bases of patents relevant to their standards. Users are encouraged to consult the data bases for the most up to date information concerning patents.

Documents
Document Sharing Hub

Full document details: PD IEC TR 63141:2020

DAMP HEAT, STEADY STATE (UNSATURATED PRESSURIZED VAPOUR WITH AIR)

1 Scope

This document describes a new test method to control the volume of air injected into a conventional HAST chamber filled with water vapour. This document provides an overview of the conventional HAST chamber, an overview of the air-HAST equipment where air is incorporated into the HAST chamber, an example of an air-HAST test apparatus, and application examples of air-HAST.

2 Normative references

There are no normative references in this document.

3 Terms and definitions

For the purposes of this document, the following terms and definitions apply.

ISO and IEC maintain terminological databases for use in standardization at the following addresses:

- IEC Electropedia: available at http://www.electropedia.org/
- ISO Online browsing platform: available at http://www.iso.org/obp

3.1
galvanic corrosion
corrosion damage induced when two dissimilar materials are coupled in a corrosive electrolyte

3.2
Kirkendall effect
motion of the boundary layer between two metals that occurs as a consequence of the difference in diffusion rates of the metal atoms

3.3
whisker
metallic protrusion which grows up naturally during storage or in use

3.4
HAST
highly accelerated stress test
original test method developed to evaluate the corrosion of the semiconductor wiring at a high temperature of 100 °C or more

3.5
air-HAST
HAST test method with the addition of further air partial pressure in a HAST chamber

Documents
Document Sharing Hub

Full document details: PD IEC TR 63141:2020

4 Overview of HAST and air-HAST

4.1 Overview of HAST chamber

4.1.1 Structure of HAST chamber

HAST is an evaluation test at a high-temperature and high-humidity unsaturated pressurized steam atmosphere environment of more than 100 °C. The test apparatus is roughly divided into a one-vessel type and a two-vessel type, as shown in Figure 1.

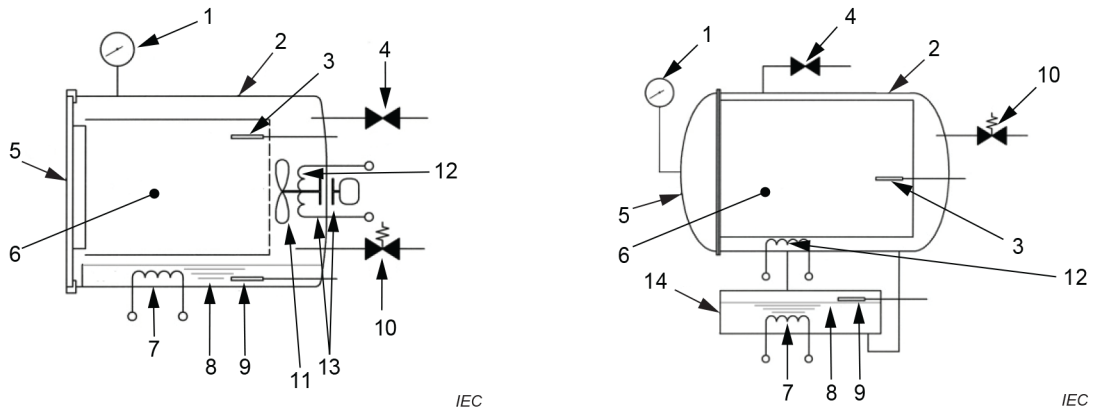

a) One-vessel type **b) Two-vessel type**

Key

1 pressure gauge
2 pressure vessel
2 temperature sensor for moisture
4 safety valve
5 door
6 working space
7 heater for humidifying water
8 humidifying water
9 temperature sensor for humidifying water
10 air-exhaust valve
11 fan
12 heater for moisture fan for air
13 magnetic coupling
14 pressure vessel 2

Figure 1 – Two types of HAST equipment and their structures

The configuration of the one-vessel type and the configuration of the two-vessel type are explained as follows.

a) Configuration of the one-vessel type (See Figure 1 a))

This type of chamber is called a one-vessel type because it has only one pressure vessel. The inner cylinder provided inside the pressure vessel is divided into a steam generator for supplying humidifying water vapour and a working space to set the sample. A fan for generating a flow of steam from the steam generator to the working space is provided in the back of the inner cylinder. Heaters are arranged outside of this fan and in the steam generator. Steam flow rate of this system is suppressed to about the flow rate of natural convection.

b) Configuration of the two-vessel type (See Figure 1 b))

Documents
Document Sharing Hub

This type of chamber is called a two-vessel type because it is composed of two different pressure vessels: the test chamber which sets the sample and the steam generation chamber which supplies humidifying water vapour. Heaters are respectively located in the test chamber and the steam generation chamber. Water vapour is fed by boiling water vapour pressure to the test chamber from the steam generation chamber holding the humidifying water, the amount that was the condensed water goes back into the steam generation chamber. There is an inner cylinder in the test chamber, and a heater is provided on the outside of this inner cylinder. Heat from the heater is transmitted to the inner cylinder, keeping the temperature of the entire working space at a constant level. This system is also referred to as a natural convection because it does not require a fan for the circulation of water vapour.

4.1.2 Definition of humidity

HAST is carried out in a closed vessel which is isolated from the atmosphere of the atmospheric pressure (pressure vessel), under the assumption that air is absent from the filled water vapour atmosphere. Therefore during the start of HAST, steps to eliminate air (Figure 2 air vent process) are always taken. The humidifying water is heated and boiled by the heater, the exhaust valve is opened and the test vessel is filled with 100 % water vapour until all air is discharged. Then the exhaust valve is closed to perform heating until the test temperature in the vessel is reached again. The difference between the saturated test and unsaturated test in the working space in the chamber is then recorded. The state of the saturated test is shown in Figure 3. The state of the unsaturated test is shown in Figure 4. The air vent process is executed in both the saturated test and unsaturated test, the chamber needs to be filled with 100 % water vapour without air.

In saturation conditions, the working space is kept at a constant temperature by water vapour generated from the humidifying water because the heating source is only humidifying the water heater.

T_1: is the humidification water temperature;

T_2: is the test space temperature.

In this case the vessel temperature is $T_1 = T_2$.

In the case of the unsaturated test, a heater for heating the working space is installed in the chamber. In the apparatus, water vapour generated from the humidifying water enters the working space, it is re-heated by the heater to a higher temperature than the water vapour in the surroundings. When the temperature in the vessel is controlled to $T_1 < T_2$, the working space is an unsaturated vapour atmosphere. At this stage, the relative humidity (RH) of the working space is determined by the following equation:

$$H = P_1 / P_2 \times 100$$

where

H: is the relative humidity, RH (%);

P_1: is the saturated water vapour pressure in the humidification water temperature T_1 (MPa);

P_2: is the saturated water vapour pressure in the test space temperature T_2 (MPa).

At this stage the vessel pressure, P_1, is the test pressure because it is determined by the temperature of the humidification water (T_1).

Documents
Document Sharing Hub

Full document details: PD IEC TR 63141:2020

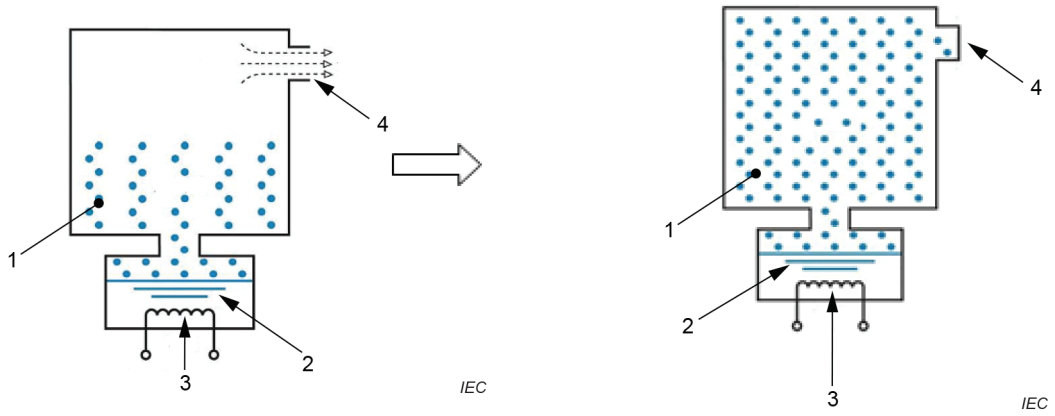

a) Air-exhaust valve open **b) Air-exhaust valve close**

Key

1 water vapour

2 humidifying water

3 heater

4 air-exhaust valve

Figure 2 – Image of air vent process

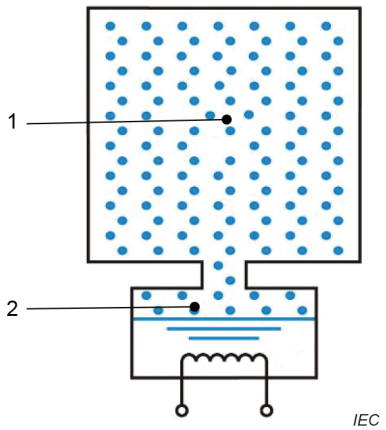

Key

1 working space

2 humidifying water

Figure 3 – Saturated test

Documents
Document Sharing Hub
Full document details: PD IEC TR 63141:2020

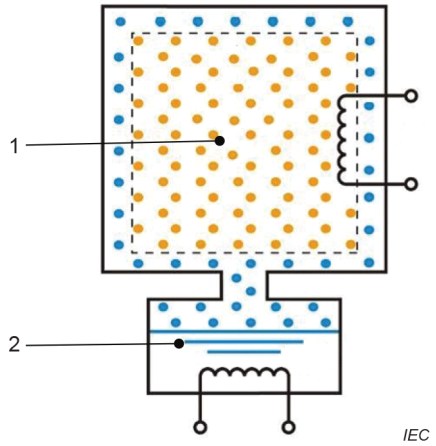

Key

1 working space

2 humidifying water

Figure 4 – Unsaturated test

4.2 Structure of air-HAST equipment

4.2.1 General

In the case of air-HAST, it is necessary to leave the air into a traditional HAST chamber. Considering the possibility that a residual air volume greatly affects test results, it becomes necessary to accurately control the amount of air. Using a conventional HAST chamber, to ensure the air-HAST environment contains air, the following two methods are used:

a) keeping a certain amount of air during start-up, and

b) injecting a predetermined amount of air after discharging air to the outside of the chamber.

Technically, either method is possible. Method a) can be realized simply by omitting the vent process, but it is difficult to control the amount of air to be discharged when adjusting the air volume. Method b) injects air after discharging air, so that the entire process becomes complicated but the control of the amount of air is easy. A dual-vessel type air-HAST chamber is shown in Figure 5. This equipment, which is a wet bulb installed and provided with a pan and wick temperature sensor in the working space of a conventional two-vessel type chamber, has become a mechanism for controlling the humidification water heater (steam generator) at the specified temperature. This air-HAST system is easily obtained from a dual-vessel type HAST equipment and has the advantage of facilitating experimentation. The method consists in injecting a predetermined amount of air from the air pressure port after the system has reached a steady state and all air in the chamber has been evacuated. The air remaining in the chamber is controlled by a pressure controller, so the constant partial pressure can be held.

Documents
Document Sharing Hub
Full document details: PD IEC TR 63141:2020

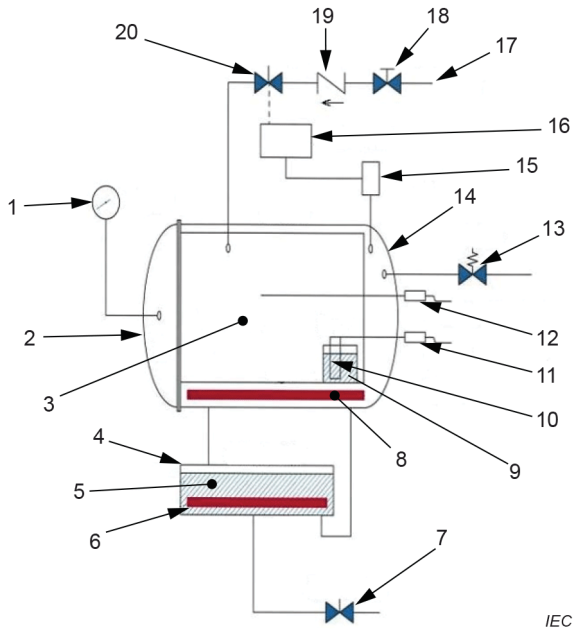

Key

1	pressure gauge	2	door	3	working space
4	pressure vessel 2	5	humidifying water	6	heater for humidifying water
7	solenoid valve for drain	8	heater for water vapour	9	wet bulb pan
10	cloth wick	11	sensor for humidifying water	12	sensor for water vapour
13	safety valve	14	pressure vessel 1	15	pressure sensor
16	pressure regulator	17	inlet	18	flow controller
19	check valve	20	solenoid valve		

Figure 5 – Structure of two-vessel type air-HAST chamber

A one-vessel air-HAST chamber (Figure 6) is used for whiskers, electrically-conducting adhesives and photovoltaic modules reliability tests. A one-vessel air-HAST chamber is of a less complex constitution providing reproducible and compatible test results. At first, the specimen is set in the vessel at room temperature, the door is closed, the test is started to create heat and humidity. This way there is no pressure damage by a sudden change in pressure and no condensation on the specimen. In addition, a forced steam of water-vapour is normally generated by means of a fan installed in the chamber to create air velocity and accurately detect humidity by a dry and wet bulb.

Documents
Document Sharing Hub
Full document details: PD IEC TR 63141:2020

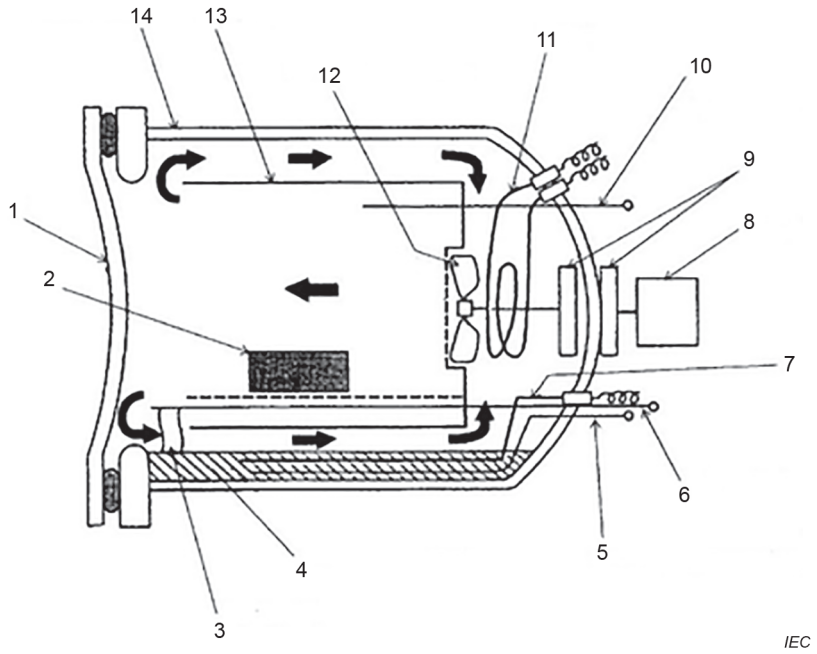

Key

1	door	2	specimen	3	cloth wick
4	humidifying water	5	humidifying water temperature sensor	6	wet bulb temperature sensor
7	humidifying heater	8	air circulating fan motor	9	magnetic coupling
10	chamber temperature sensor	11	heater	12	air circulating fan
13	inner cylinder	14	pressure vessel		

Figure 6 – Structure of one-vessel type air-HAST chamber

4.2.2 Air concentration and relative humidity

Initially the intention was to determine the exact concentration of oxygen using an oxygen concentration meter. However, since the inside of the HAST equipment reaches a high pressure up to 1 atm or more, a commercial oxygen concentration meter operating in such an environment was not available.

Therefore, the amount of air is calculated based on the gauge pressure. Moreover, since it is difficult to measure the correct relative humidity directly in an air-HAST chamber, relative humidity is controlled by the temperature in the same way as for a conventional HAST chamber.

5 Evaluation of tin whisker growth from lead-free plating and solder-joints

5.1 Whisker of lead-free solder (comb-type substrate)

5.1.1 General

Lead-free manufacturing of electronic products has now reached its implementation stage and around 2 000, the focus was moved to finding a solution to suppress tin whisker growth. Related studies are still on-going.

Documents
Document Sharing Hub
Full document details: PD IEC TR 63141:2020

Clause 5 describes the results of the studies, and how the whiskers generated from the corrosion of solder joints or plated surface are accelerated by high-temperature and high-humidity conditions; conventional HAST with temperatures exceeding 100 °C does not give the expected further acceleration and good acceleration is achieved only with air-HAST with additional air partial pressure [1] to [11][1].

5.1.2 Summary of evaluation results of solder-joint whisker growth [3] [4]

5.1.2.1 Test method

Figure 7 shows examples of the test vehicles with comb pattern conductors. The conductor width and the conductor spacing in Figure 7 a) are both 0,318 mm. In Figure 7 b) the conductor width and the conductor spacing are both 0,165 mm. These vehicles are submitted to preconditioning as described in Figure 8 with Sn-3Ag-0,5Cu solder. The coated flux on the comb pattern substrate consists of a mass fraction of 75 % of IPA (isopropyl alcohol) and a mass fraction of 25 % of WW (water white) rosin with the addition of a varied amount of diethylamine hydrobromide as an activator. Environmental test conditions are given in Table 1 and Figure 9 shows pressure, temperature and humidity profiles for both the HAST (Figure 9 a)) and air-HAST test chambers (Figure 9 b)).

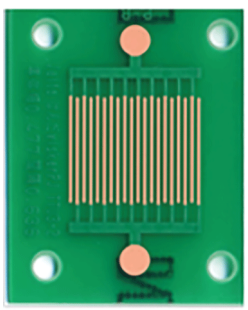

a) Large pitch (comb pattern 1)

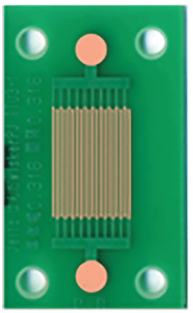

b) Small pitch (comb pattern 2)

Figure 7 – Example of test vehicle with comb pattern

Table 1 – Test conditions

Test type	Test condition
High temperature/high humidity	55 °C/85 % RH
	75 °C/85 % RH
	85 °C/85 % RH
HAST	110 °C/85 % RH (Air partial pressure 0 kPa)
Air-HAST	110 °C/85 % RH (Air partial pressure 130 kPa)[a]
[a] Theoretical value.	

[1] Numbers in square brackets refer to the bibliography.

Documents
Document Sharing Hub
Full document details: PD IEC TR 63141:2020

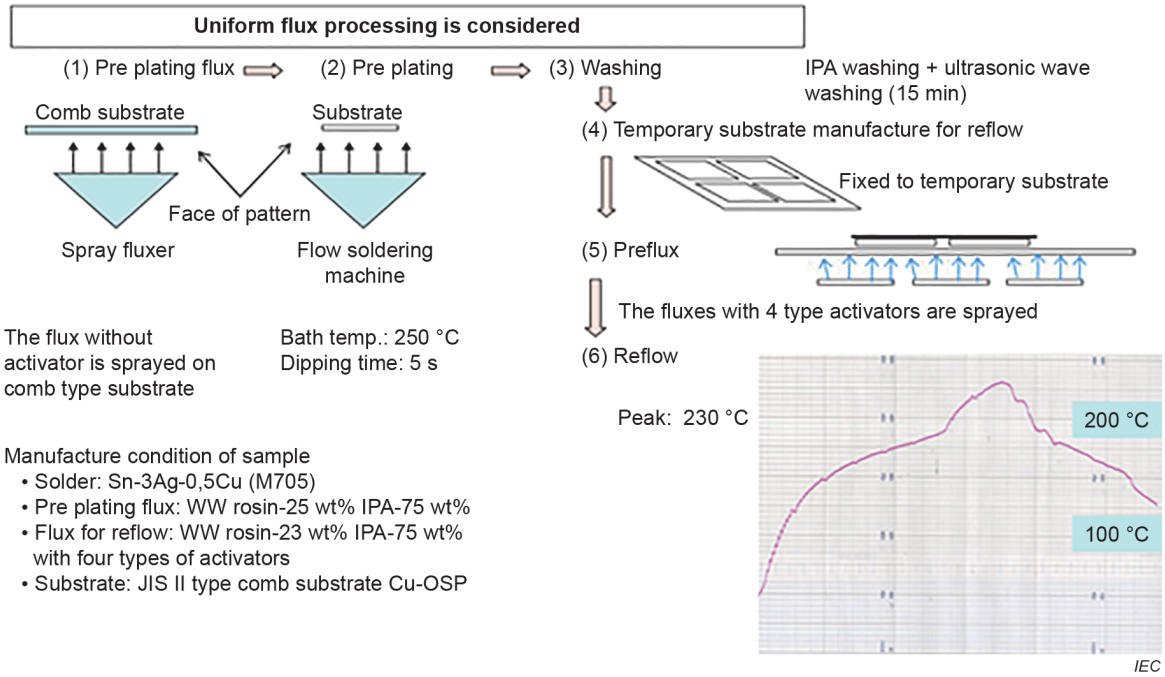

Figure 8 – Process flow for sample build

HAST (wet and dry bulb controlled) conditions are:

Total pressure: 0,121 8 MPa abs, 0,03 MPa G.

Air-HAST conditions are:

Total pressure: 0,251 8 MPa abs, 0,15 MPa G.

Documents
Document Sharing Hub
Full document details: PD IEC TR 63141:2020