PD IEC TR 63227:2020

BSI Standards Publication

Lightning and surge voltage protection for photovoltaic (PV) power supply systems

Documents
Document Sharing Hub

Full document details: PD IEC TR 63227:2020

National foreword

This Published Document is the UK implementation of IEC TR 63227:2020.

The UK participation in its preparation was entrusted to Technical Committee GEL/82, Photovoltaic Energy Systems.

A list of organizations represented on this committee can be obtained on request to its committee manager.

This publication does not purport to include all the necessary provisions of a contract. Users are responsible for its correct application.

© The British Standards Institution 2020
Published by BSI Standards Limited 2020

ISBN 978 0 539 02930 7

ICS 27.160

Compliance with a British Standard cannot confer immunity from legal obligations.

This Published Document was published under the authority of the Standards Policy and Strategy Committee on 31 October 2020.

Amendments/corrigenda issued since publication

Date	Text affected

Documents
Document Sharing Hub

Full document details: PD IEC TR 63227:2020

IEC TR 63227

Edition 1.0 2020-10

INTERNATIONAL STANDARD

colour inside

Lightning and surge voltage protection for photovoltaic (PV) power supply systems

INTERNATIONAL
ELECTROTECHNICAL
COMMISSION

ICS 27.160

ISBN 978-2-8322-8950-1

Warning! Make sure that you obtained this publication from an authorized distributor.

® Registered trademark of the International Electrotechnical Commission

Documents
Document Sharing Hub

Full document details: PD IEC TR 63227:2020

CONTENTS

FOREWORD 4
1 Scope 6
2 Normative references 6
3 Terms and definitions 7
4 Design principles 8
4.1 Causes of damage and damages 8
4.2 Galvanic coupling 8
4.3 Magnetic field coupling 9
4.4 Electric field coupling 10
4.5 Risk management 10
5 Lightning protection system (LPS) 11
5.1 General 11
5.2 External lightning protection 12
5.3 Internal lightning protection 14
5.4 Lightning equipotential bonding 15
5.5 Lightning protection zone concept 15
5.6 Selection of surge protective devices (SPDs) 15
5.6.1 General 15
5.6.2 Class I tested SPD, lightning current-carrying capacity I_{imp} 21
5.6.3 Class II tested SPD, nominal impulse discharge surge current I_n 23
5.7 Coordination of surge protective devices 23
5.8 Selection of surge protective devices for a functionally earthed line conductor 23
6 Routing and shielding of cables/lines 23
7 Functional earthing/lightning equipotential bonding 25
8 Inspection and documentation 26
Annex A (informative) Shadowing 27
Annex B (informative) Tracking PV power supply system – External lightning protection/down-conductors 29
Annex C (informative) Practical example: lightning protection for a PV power supply system installed on a saddle roof building 30
Annex D (informative) PV power supply system as a free-field system 32
D.1 General 32
D.2 Earth screw foundations 32
D.3 Plate and strip or ring foundations 33
D.4 Lightning current-carrying capacity of Class I tested SPDs for free-field systems 34
Annex E (informative) Metal roof and metal façade 36
E.1 Metal roof 36
E.2 Metal façades 36
Bibliography 38

Figure 1 – Examples of direct-axis components of voltage for galvanic coupling 9
Figure 2 – Voltages induced in loops by the steepness of the lightning current 10

AVA Documents
Document Sharing Hub

Figure 3 – High resolution full climatology (HRFC) 11
Figure 4 – Example for the design of the air-termination system for a PV power supply system using the rolling sphere method 12
Figure 5 – Maintaining the separation distance 13
Figure 6 – Example for the design of the air-termination system for a PV power supply system 14
Figure 7 – Use of SPDs in PV power supply systems 16
Figure 8 – Situation A) The surge voltage protection concept for a PV power supply system on a building without external lightning protection 17
Figure 9 – Situation B) Surge voltage protection concept for a PV power supply system on a building with external lightning protection, the separation distance s is maintained 17
Figure 10 – Situation C) Surge voltage protection concept for a PV power supply system on a building with external lightning protection, the separation distance s is not maintained 18
Figure 11 – Situation C) Surge voltage protection concept for a PV power supply system on a building with external lightning protection, the separation distance s is not maintained, use of a shield able to carry the lightning current 18
Figure 12 – Flow chart for the selection of protective measures 20
Figure 13 – Example of a structure with two down-conductors of the external lightning protection system 22
Figure 14 – Reduction of the effects of induction by shielding and line routing 24
Figure 15 – Example for the shielding of the generator main lines by closed metal cable channels 25
Figure 16 – Functional earthing of the module racks in case no external lightning protection is available or the separation distance is not maintained 26
Figure 17 – Lightning equipotential bonding at the module racks in case the separation distance is not maintained 26
Figure A.1 – Shadowing of a PV module by a lightning rod 27
Figure A.2 – Minimum distance between the lightning rod or lightning line and the PV module required to prevent an umbra 28
Figure C.1 – Saddle roof building – Meshed air-termination systems of lightning protection level III, the PV power supply system spans several meshes 30
Figure C.2 – Example for the calculation of the separation distances for lightning protection level III 31
Figure D.1 – Connection of module tables to the earthing system for pile-driven foundations and earth screw foundations 33
Figure D.2 – Connection of module tables to the earthing system for strip foundations 34
Figure D.3 – Earthing concept and arrangement of the SPDs for a free field 35

Table 1 – Selection of the SPD test class (type) and minimum cross-section of the equipotential bonding 16
Table 2 – Selection of the minimum discharge capacity of voltage limiting SPDs of Class I tested (voltage limiting type) or combined SPDs of Type 1 (series connection of voltage limiting type and voltage switching type) 21
Table 3 – Selection of the minimum discharge capacity of voltage switching class I tested SPDs (voltage switching) or combined class I tested SPDs (parallel connection of voltage limiting and voltage switching) 22
Table A.1 – Minimum distance of air-termination systems required to avoid an umbra 28
Table D.1 – Minimum discharge capacity of voltage limiting or combined Class I tested SPDs and voltage switching type class I tested SPDs 35

AVA Documents
Document Sharing Hub

INTERNATIONAL ELECTROTECHNICAL COMMISSION

LIGHTNING AND SURGE VOLTAGE PROTECTION FOR PHOTOVOLTAIC (PV) POWER SUPPLY SYSTEMS

FOREWORD

1) The International Electrotechnical Commission (IEC) is a worldwide organization for standardization comprising all national electrotechnical committees (IEC National Committees). The object of IEC is to promote international co-operation on all questions concerning standardization in the electrical and electronic fields. To this end and in addition to other activities, IEC publishes International Standards, Technical Specifications, Technical Reports, Publicly Available Specifications (PAS) and Guides (hereafter referred to as "IEC Publication(s)"). Their preparation is entrusted to technical committees; any IEC National Committee interested in the subject dealt with may participate in this preparatory work. International, governmental and non-governmental organizations liaising with the IEC also participate in this preparation. IEC collaborates closely with the International Organization for Standardization (ISO) in accordance with conditions determined by agreement between the two organizations.
2) The formal decisions or agreements of IEC on technical matters express, as nearly as possible, an international consensus of opinion on the relevant subjects since each technical committee has representation from all interested IEC National Committees.
3) IEC Publications have the form of recommendations for international use and are accepted by IEC National Committees in that sense. While all reasonable efforts are made to ensure that the technical content of IEC Publications is accurate, IEC cannot be held responsible for the way in which they are used or for any misinterpretation by any end user.
4) In order to promote international uniformity, IEC National Committees undertake to apply IEC Publications transparently to the maximum extent possible in their national and regional publications. Any divergence between any IEC Publication and the corresponding national or regional publication shall be clearly indicated in the latter.
5) IEC itself does not provide any attestation of conformity. Independent certification bodies provide conformity assessment services and, in some areas, access to IEC marks of conformity. IEC is not responsible for any services carried out by independent certification bodies.
6) All users should ensure that they have the latest edition of this publication.
7) No liability shall attach to IEC or its directors, employees, servants or agents including individual experts and members of its technical committees and IEC National Committees for any personal injury, property damage or other damage of any nature whatsoever, whether direct or indirect, or for costs (including legal fees) and expenses arising out of the publication, use of, or reliance upon, this IEC Publication or any other IEC Publications.
8) Attention is drawn to the Normative references cited in this publication. Use of the referenced publications is indispensable for the correct application of this publication.
9) Attention is drawn to the possibility that some of the elements of this IEC Publication may be the subject of patent rights. IEC shall not be held responsible for identifying any or all such patent rights.

IEC TR 63227 has been prepared by IEC technical committee 82: Solar photovoltaic energy systems. It is a Technical Report.

The text of this Technical Report is based on the following documents:

Draft	Report on voting
82/1501/DTR	82/1554A/RVDTR

Full information on the voting for its approval can be found in the report on voting indicated in the above table.

The language used for the development of this Technical Report is English.

This document was drafted in accordance with ISO/IEC Directives, Part 2, and developed in accordance with ISO/IEC Directives, Part 1 and ISO/IEC Directives, IEC Supplement, available at www.iec.ch/members_experts/refdocs. The main document types developed by IEC are described in greater detail at www.iec.ch/standardsdev/publications.

AVA Documents Document Sharing Hub

Full document details: PD IEC TR 63227:2020

The committee has decided that the contents of this document will remain unchanged until the stability date indicated on the IEC website under webstore.iec.ch in the data related to the specific document. At this date, the document will be

- reconfirmed,
- withdrawn,
- replaced by a revised edition, or
- amended.

IMPORTANT – The 'colour inside' logo on the cover page of this publication indicates that it contains colours which are considered to be useful for the correct understanding of its contents. Users should therefore print this document using a colour printer.

Documents
Document Sharing Hub

Full document details: PD IEC TR 63227:2020

LIGHTNING AND SURGE VOLTAGE PROTECTION FOR PHOTOVOLTAIC (PV) POWER SUPPLY SYSTEMS

1 Scope

This document deals with the protection of PV power supply systems against detrimental effects of lightning strikes and surge voltages of atmospheric origin. In the event that a lightning and/or surge voltage protection is required to be erected, this document describes requirements and measures for maintaining the safety, functionality, and availability of the PV power supply systems.

2 Normative references

The following documents are referred to in the text in such a way that some or all of their content constitutes requirements of this document. For dated references, only the edition cited applies. For undated references, the latest edition of the referenced document (including any amendments) applies.

IEC 60364-4-44:2007/AMD1:2015, *Low-voltage electrical installations – Part 4-44: Protection for safety – Protection against voltage disturbances and electromagnetic disturbances*

IEC 60364-7-712:2017, *Low voltage electrical installations – Part 7-712: Requirements for special installations or locations – Solar photovoltaic (PV) power supply systems*

IEC 61643-11:2011, *Low-voltage surge protective devices – Part 11: Surge protective devices connected to low-voltage power systems – Requirements and test methods*

IEC 61643-21, *Low voltage surge protective devices – Part 21: Surge protective devices connected to telecommunications and signalling networks – Performance requirements and testing methods*

IEC 61643-31, *Low-voltage surge protective devices – Part 31: Requirements and test methods for SPDs for photovoltaic* installations

IEC 62305-1, *Protection against lightning – Part 1: General principles*

IEC 62305-2, *Protection against lightning – Part 2: Risk management*

IEC 62305-3:2010, *Protection against lightning – Part 3: Physical damage to structures and life hazard*

IEC 62305-4, *Protection against lightning – Part 4: Electrical and electronic systems within structures*

IEC 62561-1, *Lightning Protection System Components (LPSC) – Part 1: Requirements for connection components*

IEC 62561-2, *Lightning Protection System Components (LPSC) – Part 2: Requirements for conductors and earth electrodes*

Documents
Document Sharing Hub

Full document details: PD IEC TR 63227:2020

IEC 62561-3, *Lightning Protection System Components (LPSC) – Part 3: Requirements for isolating spark gaps (ISG)*

IEC 62561-4, *Lightning protection system components (LPSC) – Part 4: Requirements for conductor fasteners*

3 Terms and definitions

For the purposes of this document, the following terms and definitions apply.

ISO and IEC maintain terminological databases for use in standardization at the following addresses:

- IEC Electropedia: available at http://www.electropedia.org/
- ISO Online browsing platform: available at http://www.iso.org/obp

3.1
photovoltaic
PV
relating to the conversion of light directly into electrical energy

[SOURCE: IEC 62109-1:2011, 3.55]

3.2
PV module
smallest complete and environmentally protected assembly of interconnected PV cells

[SOURCE: IEC 60364-7-712:2017, 712.3.2]

3.3
PV inverter
device which converts DC voltage and DC current into AC voltage and AC current

3.4
PV string
circuit in which PV modules are connected in series to a PV sub-generator in order to achieve the specified output voltage

3.5
PV sub-generator
mechanically and electrically assembled combination of PV modules and other necessary components in order to form a DC power supply unit

3.6
PV generator
combination of PV sub-generators

3.7
surge protective device
SPD
device that contains at least one non-linear component and is intended to limit surge voltages and divert surge currents

Note 1 to entry: An SPD is a complete assembly having appropriate connecting means.

[SOURCE: IEC 61643-11:2011, 3.1.1]

Documents
Document Sharing Hub

Full document details: PD IEC TR 63227:2020

3.8
voltage switching type SPD
SPD that has a high impedance when no surge is present, but can have a sudden change in impedance to a low value in response to a voltage surge

Note 1 to entry: Common examples of components used in voltage switching type SPDs are spark gaps, gas tubes, and thyristors. These are sometimes called “crowbar type” components.

[SOURCE: IEC 61643-11:2011, 3.1.4]

3.9
voltage limiting type SPD
SPD that has a high impedance when no surge is present, but will reduce it continuously with increased surge current and voltage

Note 1 to entry: Common examples of components used in voltage limiting type SPDs are varistors and avalanche breakdown diodes. These are sometimes called “damping type” components.

[SOURCE: IEC 61643-11:2011, 3.1.5]

3.10
combination type SPD
SPD that incorporates both voltage switching components and voltage limiting components

Note 1 to entry: The SPD can exhibit voltage switching (e.g. spark gap), voltage limiting (e.g. varistor) or both. These components can be connected in series as well as in parallel.

[SOURCE: IEC 61643-11:2011, 3.1.6, modified – Second sentence of definition moved to the note to entry. Second sentence of note to entry has been added.]

4 Design principles

4.1 Causes of damage and damages

The lightning current of a lightning discharge can be injected into PV power supply systems in different ways:

– by galvanic coupling;
– by magnetic field coupling;
– by electric field coupling.

The respective type of coupling is influenced by lightning protective measures (e.g. earthing, equipotential bonding, shielding of the structure, shielding of the electric lines as well as layout and type of these lines).

4.2 Galvanic coupling

A prerequisite for galvanic coupling is for the lightning current or at least part of it to be injected directly. The (partial) lightning current generates a direct-axis component of voltage at the impedances of the lines it passes through. When a structure is struck by lightning, the current flowing to earth normally generates a voltage magnitude of some hundred kilovolts at the effective conventional earth impedance.

Figure 1 shows examples of galvanic couplings at an equipotential bonding line carrying a (partial) lightning current and at the conventional earth impedance. This type of coupling is also present where a (partial) lightning current passes through a line’s cable screen. In that case, the (partial) lightning current causes a direct-axis component of voltage at the coupling impedance of the cable screen, which appears between the cable screen and the inner

AVA Documents Document Sharing Hub

conductor. This direct-axis component of voltage U_1 can jeopardize the electric or electronic systems connected at the two line ends.

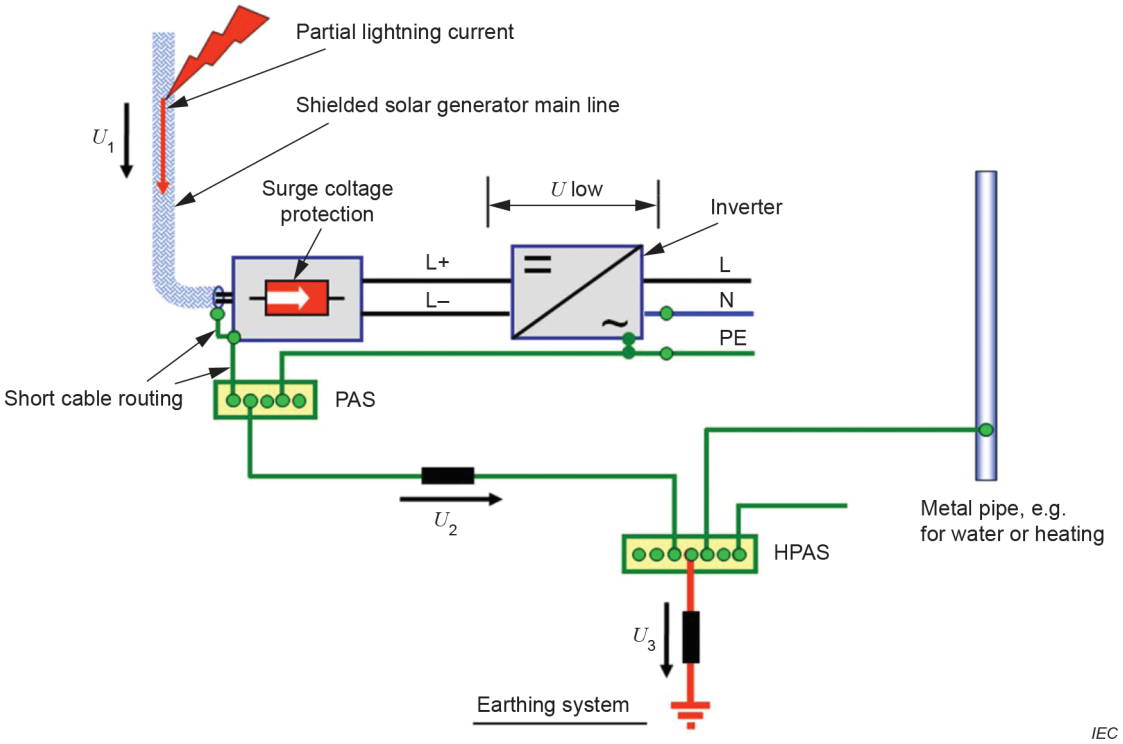

Key

U_1	Direct-axis component of voltage at the cable screen the current flows through
U_2	Direct-axis component of voltage at the voltage equalizing cable $U_2 = L\ \mathrm{d}i/\mathrm{d}t$
U_3	Voltage at the conventional earth impedance RE ($U_3 = i\ R_E$)
PAS	Equipotential bonding bar
HPAS	Main earthing bar

Figure 1 – Examples of direct-axis components of voltage for galvanic coupling

4.3 Magnetic field coupling

The process at which the magnetic field $H(t)$ of a lightning discharge passes through conductor loops is referred to as magnetic field coupling or magnetic induction (see Figure 2). If the conductor loops are open (idle motion), voltages u_{ind} will result in proportion to $\mathrm{d}H/\mathrm{d}t$; however, where the conductor loops are short-circuited currents, i_{ind} will result in proportion to $H(t)$.

Documents
Document Sharing Hub
Full document details: PD IEC TR 63227:2020

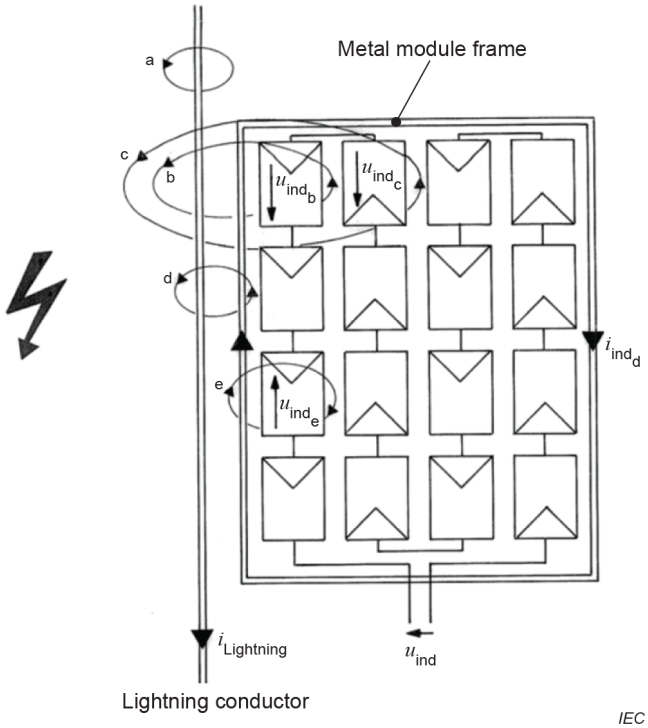

Figure 2 – Voltages induced in loops by the steepness of the lightning current

Magnetic injections can be reduced considerably by increasing the distance of air-termination systems and down-conductors to the PV modules. A minimum value of 0,5 m is recommended for the distance of air-termination systems and down-conductors to the PV modules. The separation distance s can differ from this value (see Annex C).

4.4 Electric field coupling

A prerequisite for electric field coupling is an “electrically effective aerial” (e.g. the module frame). The electric field strength resulting from the leader approaching reaches up to 500 kV/m at a distance of a couple hundred metres to the prospective striking point. As soon as the main discharge starts, the electric field breaks down. During that process, field changes $\mathrm{d}E/\mathrm{d}t$ can appear at a magnitude of 500 (kV/m)/µs.

The effect of electric field coupling to equipment installed within and outside a structure is generally very small compared to that of magnetic field coupling.

4.5 Risk management

A lightning protection system (LPS) designed to comply with class III meets the regular requirements for PV power supply systems.

In special cases, e.g. for objects of cultural value or requirements for an increased availability of the system, it should be checked in accordance with IEC 62305-2 whether additional measures or a different LPS class is required.

The lightning protection measures for the PV power supply system are adapted to the LPS class of the structure. The LPS class of the building is determined by factors as its use, values and others as well as the area-specific lightning activity (Figure 3). The area-specific lightning activity should be also taken into account to decide on lightning protection measures for ground-mounted systems.

Documents
Document Sharing Hub
Full document details: PD IEC TR 63227:2020

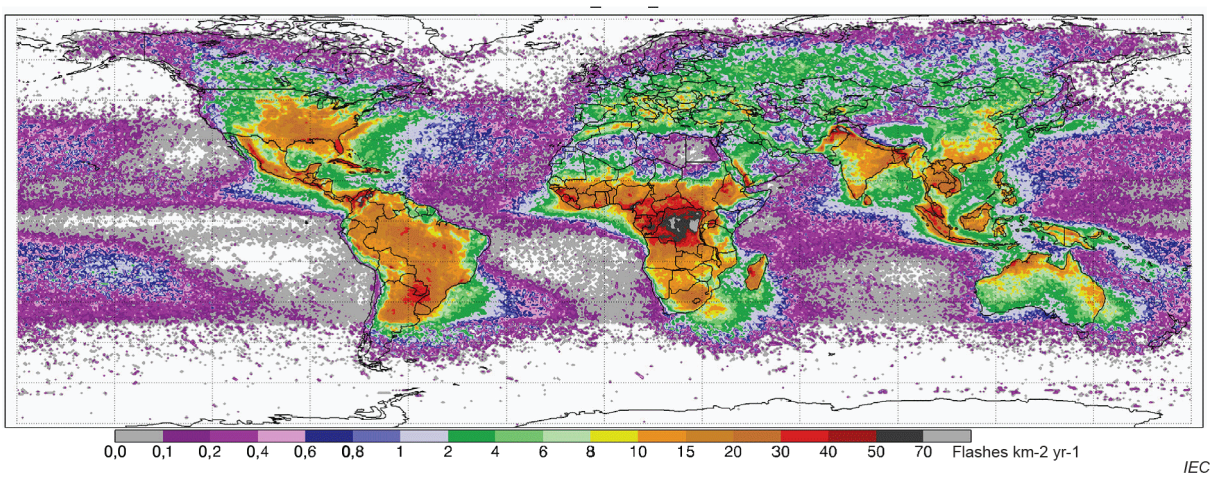

(Source: https://ghrc.nsstc.nasa.gov/pub/lis/climatology/LIS-OTD/HRFC/browse/HRFC_COM_FR_V2.3.2015.png)

Figure 3 – High resolution full climatology (HRFC)

5 Lightning protection system (LPS)

5.1 General

The erection of conventional PV power supply systems on or at buildings does not change the lightning strike risk. It is recommended to design and harmonize the PV power supply and lightning protection systems before erection.

The PV generator delivers current and voltage even at low amounts of solar irradiance. This has to be taken into account for mounting and troubleshooting purposes.

Suitable measures of external lightning protection are supposed to catch direct lightning and feed them into an earthing system such that no galvanically coupled currents can have an effect on metal building installations and the PV power supply system.

In addition to that, measures of internal lightning protection are used to prevent impacts that lightning strikes and potential differences may have onto and inside the building.

The purpose of these measures is to prevent damage to the building (mechanical damages up and including fire and its effects) as well as damage to the PV power supply system (supply networks, controls and electrical protective equipment). Where the legislator requires lightning protective measures as part of the preventive fire protection, these shall not be affected by PV power supply systems.

For lightning protection, the IEC 62305 series applies.

For the erection of PV power supply systems, the IEC 60364 series and, in particular, IEC 60364-7-712 apply.

In order for a lightning protection system to be erected, co-ordination across all trades involved is required.

Design, erection, and inspection are carried out by lightning protection specialists. The requirements for lightning protection specialists are specified in IEC 62305-3. A lightning protection specialist is someone who is able to design, erect or inspect lightning protection systems based on their professional training, knowledge, and experience as well as knowledge of the relevant standards.

AVA Documents
Document Sharing Hub
Full document details: PD IEC TR 63227:2020