PD IEC TR 63282:2024

BSI Standards Publication

LVDC systems — Assessment of standard voltages and power quality requirements

Documents
Document Sharing Hub

Full document details: PD IEC TR 63282:2024

National foreword

This Published Document is the UK implementation of IEC TR 63282:2024. It supersedes PD IEC TR 63282:2020, which is withdrawn.

The UK participation in its preparation was entrusted to Technical Committee GEL/8, Systems Aspects for Electrical Energy Supply.

A list of organizations represented on this committee can be obtained on request to its committee manager.

Contractual and legal considerations

This publication has been prepared in good faith, however no representation, warranty, assurance or undertaking (express or implied) is or will be made, and no responsibility or liability is or will be accepted by BSI in relation to the adequacy, accuracy, completeness or reasonableness of this publication. All and any such responsibility and liability is expressly disclaimed to the full extent permitted by the law.

This publication is provided as is, and is to be used at the recipient's own risk.

The recipient is advised to consider seeking professional guidance with respect to its use of this publication.

This publication is not intended to constitute a contract. Users are responsible for its correct application.

This publication is not to be regarded as a British Standard.

© The British Standards Institution 2024
Published by BSI Standards Limited 2024

ISBN 978 0 539 17858 6

ICS 29.020

Compliance with a Published Document cannot confer immunity from legal obligations.

This Published Document was published under the authority of the Standards Policy and Strategy Committee on 31 August 2024.

Amendments/corrigenda issued since publication

Date	Text affected

Documents
Document Sharing Hub

Full document details: PD IEC TR 63282:2024

IEC TR 63282

Edition 2.0 2024-08

TECHNICAL REPORT

colour inside

LVDC systems – Assessment of standard voltages and power quality requirements

INTERNATIONAL
ELECTROTECHNICAL
COMMISSION

ICS 29.020

ISBN 978-2-8322-9130-6

Warning! Make sure that you obtained this publication from an authorized distributor.

® Registered trademark of the International Electrotechnical Commission

Documents
Document Sharing Hub

Full document details: PD IEC TR 63282:2024

CONTENTS

FOREWORD 7
INTRODUCTION 9
1 Scope 10
2 Normative references 10
3 Terms and definitions 10
4 Structure of LVDC systems 14
4.1 General 14
4.2 Architecture 14
4.3 Operation modes 15
4.3.1 Passive DC systems 15
4.3.2 Active DC systems 15
5 LVDC voltage division 16
5.1 General 16
5.2 Voltage bands 16
5.3 Operation ranges with respect to DC voltage and time 18
5.4 States 19
6 Power quality phenomena relevant to LVDC networks 19
6.1 General 19
6.2 Relationships between voltage band and power quality in LVDC systems 20
6.3 Relationship between oscillation and power quality in LVDC systems 20
6.4 Supply voltage deviation 21
6.5 Ripple and high frequency interference 22
6.6 Voltage swell 23
6.7 Voltage dip 24
6.8 Voltage supply interruption 25
6.9 Rapid voltage change (RVC) 25
6.10 Voltage surges 26
6.11 Voltage unbalance 27
7 Guidance for voltages and power quality in LVDC system 28
7.1 Considerations for voltages in distribution DC networks 28
7.1.1 General 28
7.1.2 Factors considered to define voltage values 28
7.1.3 DC voltages 30
7.2 EMC, compatibility and testing of equipment 31
7.3 Considerations for DC power quality 33
7.4 Measurement methods 34
7.4.1 General 34
7.4.2 DC system electric value integration time 35
7.4.3 Frequency ranges of ripple spectral analysis 35
7.4.4 DC power quality measurement methods 35
7.4.5 DC system electric power measurements 35
7.5 DC power quality standardization framework 35
Annex A (informative) PQ waveforms collected from a certain LVDC project 36
Annex B (informative) A LVDC oscillation typical example 38
Annex C (informative) Supply radius in DC distribution systems 40
Annex D (informative) Electric power and power quality computation in DC system 41

AVA Documents
Document Sharing Hub

D.1 DC mean and RMS values of voltage or current ... 41
D.2 General electric power system: decomposition of a general electric load ... 41
D.3 Computation of electric powers and PQ indices ... 42
D.3.1 Computation of electric values in time domain ... 42
D.3.2 Computation of electric values in frequency domain ... 43
D.3.3 Total harmonic distortion T_{hd} used in AC system ... 44
D.3.4 The relation of different electric powers ... 45
D.4 Representation of electric powers in AC system ... 46
D.5 Representation of electric powers in DC system ... 46
D.6 Power quality indices in DC system ... 47
D.6.1 General ... 47
D.6.2 DC peak-peak ripples ... 47
D.6.3 Ripple spectra ... 47
D.6.4 DC RMS ripple or ripple distortion ... 48
D.7 Illustration example of distortion power in DC system ... 50
D.8 Main conclusions on electric value computation in DC system ... 50
D.9 Need of characteristics of DC voltage ... 51
Annex E (informative) District LVDC system demonstration project in Tongli, China ... 52
E.1 Project overview ... 52
E.2 Voltage level selection principle ... 52
E.3 System operation ... 53
Annex F (informative) A typical MV&LVDC distribution system in Wujiang, China ... 54
F.1 Project overview ... 54
F.2 Voltage selection ... 55
Annex G (informative) An office building with general building utilities and office workplaces ... 58
G.1 Sustainable circular building ... 58
G.2 Zone system ... 61
G.3 Aspects regarding the DC zone classification in DC installation ... 67
Annex H (informative) An example of configurations for active DC systems ... 68
H.1 General ... 68
H.2 Structure ... 68
H.3 State of grid (SOG) ... 68
Annex I (informative) Preferred voltage in different countries ... 73
I.1 Preferred voltage in China ... 73
I.2 Preferred voltage in the Netherlands ... 75
I.3 Preferred voltage in Germany ... 75
Annex J (informative) Voltage with respect to earth ... 77
Annex K (informative) CIGRE approaches for DC systems ... 80
Annex L (informative) Voltage level in Current OS ... 81
L.1 Introduction to the organization ... 81
L.2 Voltages used in Current OS ... 81
Annex M (informative) Voltage level in DC-INDUSTRY and open DC alliance ... 85
M.1 General ... 85
M.2 Operating range of the components ... 85
M.3 Regulated feeders ... 86
M.4 Uncontrolled feeders ... 86
M.5 Typical DC loads ... 86

Documents
Document Sharing Hub
Full document details: PD IEC TR 63282:2024

M.6 Converters for energy storage or photovoltaic ... 87
M.7 DC breakers ... 87
M.8 Nominal voltage ... 87
M.9 Voltage bands and limits ... 87
M.10 Operating status of the DC grid ... 89
M.10.1 General ... 89
M.10.2 Duration for the operating statuses ... 89
M.10.3 Examples for the operating statuses ... 90
M.10.4 Description of operating statuses ... 90
Bibliography ... 92

Figure 1 – Unipolar, balanced and bipolar DC systems ... 15
Figure 2 – Voltage bands in DC systems ... 16
Figure 3 – DC Voltage areas for safe interoperability ... 18
Figure 4 – Relationships between voltage band and power quality in LVDC systems ... 20
Figure 5 − Oscillation example ... 21
Figure 6 – Voltage swell example ... 24
Figure 7 – Voltage dip example ... 25
Figure 8 – RVC event: example of a change in average voltage that results in an RVC event ... 26
Figure 9 – Example of voltage surge ... 27
Figure 10 – A schematic of a bipolar system (the CIGRE B4 DC test system) ... 28
Figure 11 – LVDC distribution domain and installation domain ... 29
Figure 12 – Relation between disturbance levels (schematic significance only) ... 31
Figure 13 – LVAC voltage compatibility and immunity levels ... 32
Figure A.1 – Voltage deviation caused by load switching ... 36
Figure A.2 – Voltage ripple in steady state ... 36
Figure A.3 – Voltage dip caused by the start-up of motor load ... 37
Figure B.1 – Equivalent topology of the substation ... 38
Figure B.2 – The voltage and current oscillation waveform on ±375 V bus ... 39
Figure D.1 – Equivalent model of a general electric load ... 42
Figure D.2 – Representation of electric powers in AC system ... 46
Figure D.3 – Representation of electric powers in DC system ... 46
Figure D.4 – Ripples of output DC voltage of positive of a PWM AC/DC converter ... 47
Figure D.5 – Spectral analysis of DC voltage and current measured at the input of an electronic load ... 48
Figure D.6 – DC powers caused by intermittent DC current ... 50
Figure D.7 – LVAC compatibility level measured in differential mode values ... 51
Figure E.1 – Architecture of the district LVDC system in Tongli ... 52
Figure F.1 – Location map of the typical MV&LVDC system ... 55
Figure F.2 – The structure of the MV&LVDC system in China ... 55
Figure G.1 – Office building with general building utilities and office work places ... 59
Figure G.2 – Example of zone 0 and zone 1 ... 62
Figure G.3 – Example of zone 0, 1 and 2 ... 63
Figure G.4 – Example of zone 2 system ... 63

AVA Documents
Document Sharing Hub

Full document details: PD IEC TR 63282:2024

Figure G.5 – Purely zone 3 system with the protection devices of distributed sources 64
Figure G.6 – Example of a zone 4 system with a single source 64
Figure G.7 – Current OS system overview and safety zones 65
Figure G.8 – DC zones label 65
Figure G.9 – Examples of DC zones labels 66
Figure H.1 – Active DC distribution system 68
Figure H.2 – DC distribution system with one load and one source 70
Figure H.3 – DC distribution system with more than one load and a source and increasing source power 71
Figure H.4 – Distribution system with more than one load and a source and dump load active 71
Figure H.5 – Distribution system with more than one load and source in overloaded mode 72
Figure J.1 – DC voltage definitions 77
Figure J.2 – DC voltage bands relative to earth 78
Figure J.3 – DC voltages to earth – examples 79
Figure K.1 – Temporary DC pole to ground voltage profiles in DC systems 80
Figure L.1 – Threshold of ventricular fibrillation 81
Figure L.2 – Voltage used in Current OS 83
Figure L.3 – Voltage bands of different levels 84
Figure M.1 – Operating ranges of the components (line-to-line voltage) 85
Figure M.2 – DC voltage of uncontrolled rectifiers (line-to-line) 86
Figure M.3 – Voltage bands and limits in DC-INDUSTRY 88
Figure M.4 – Operating status depending on voltage and duration 90

Table 1 – Voltage between lines (unipolar systems) or line and mid-point (bipolar systems) for installation domain 29
Table 2 – Voltage between lines (unipolar systems) or line and mid-point (bipolar systems) for distribution domain 30
Table 3 – Immunity test requirements for DC input and output power ports of devices meant to be used in residential, commercial and light industrial environment 32
Table 4 – Immunity test requirements for DC input and output power ports of devices meant to be used in industrial environment 33
Table 5 – Ripple on DC input power port immunity test 33
Table C.1 – 1,5 (±0,75) kV typical supply radius of overhead DC lines 40
Table C.2 – 750 (±375) V, 220 (±110) V typical section supply radius of overhead DC lines 40
Table D.1 – Different powers 50
Table F.1 – The current carrying capacity of medium voltage AC and DC cables 56
Table F.2 – The voltage level corresponding relationship between AC and DC with the same transmission capacity 56
Table F.3 – DC voltage range with modulation ratio limit 57
Table G.1 – Safety zones and labels 66
Table G.2 – Functions for different DC zone classification 67
Table H.1 – Examples in case of 350/700 V DC systems 69
Table H.2 – Allowed cable voltage drop 70

Documents
Document Sharing Hub
Full document details: PD IEC TR 63282:2024

Table I.1 – Nominal voltage in LVDC distribution system 73
Table I.2 – Nominal voltage in ELVDC equipment 74
Table I.3 – Comparison between DC and AC system voltages 75
Table I.4 – Overview of the DC voltage classes (VC) and the corresponding U_2 and U_3 values 76
Table M.1 – Nominal voltage in DC-INDUSTRY 87

Documents
Document Sharing Hub
Full document details: PD IEC TR 63282:2024

INTERNATIONAL ELECTROTECHNICAL COMMISSION

LVDC SYSTEMS – ASSESSMENT OF STANDARD VOLTAGES AND POWER QUALITY REQUIREMENTS

FOREWORD

1) The International Electrotechnical Commission (IEC) is a worldwide organization for standardization comprising all national electrotechnical committees (IEC National Committees). The object of IEC is to promote international co-operation on all questions concerning standardization in the electrical and electronic fields. To this end and in addition to other activities, IEC publishes International Standards, Technical Specifications, Technical Reports, Publicly Available Specifications (PAS) and Guides (hereafter referred to as "IEC Publication(s)"). Their preparation is entrusted to technical committees; any IEC National Committee interested in the subject dealt with may participate in this preparatory work. International, governmental and non-governmental organizations liaising with the IEC also participate in this preparation. IEC collaborates closely with the International Organization for Standardization (ISO) in accordance with conditions determined by agreement between the two organizations.
2) The formal decisions or agreements of IEC on technical matters express, as nearly as possible, an international consensus of opinion on the relevant subjects since each technical committee has representation from all interested IEC National Committees.
3) IEC Publications have the form of recommendations for international use and are accepted by IEC National Committees in that sense. While all reasonable efforts are made to ensure that the technical content of IEC Publications is accurate, IEC cannot be held responsible for the way in which they are used or for any misinterpretation by any end user.
4) In order to promote international uniformity, IEC National Committees undertake to apply IEC Publications transparently to the maximum extent possible in their national and regional publications. Any divergence between any IEC Publication and the corresponding national or regional publication shall be clearly indicated in the latter.
5) IEC itself does not provide any attestation of conformity. Independent certification bodies provide conformity assessment services and, in some areas, access to IEC marks of conformity. IEC is not responsible for any services carried out by independent certification bodies.
6) All users should ensure that they have the latest edition of this publication.
7) No liability shall attach to IEC or its directors, employees, servants or agents including individual experts and members of its technical committees and IEC National Committees for any personal injury, property damage or other damage of any nature whatsoever, whether direct or indirect, or for costs (including legal fees) and expenses arising out of the publication, use of, or reliance upon, this IEC Publication or any other IEC Publications.
8) Attention is drawn to the Normative references cited in this publication. Use of the referenced publications is indispensable for the correct application of this publication.
9) IEC draws attention to the possibility that the implementation of this document may involve the use of (a) patent(s). IEC takes no position concerning the evidence, validity or applicability of any claimed patent rights in respect thereof. As of the date of publication of this document, IEC had not received notice of (a) patent(s), which may be required to implement this document. However, implementers are cautioned that this may not represent the latest information, which may be obtained from the patent database available at https://patents.iec.ch. IEC shall not be held responsible for identifying any or all such patent rights.

IEC TR 63282 has been prepared by IEC technical committee 8: System aspects of electrical energy supply. It is a Technical Report.

This second edition cancels and replaces the first edition published in 2020. This edition constitutes a technical revision.

This edition includes the following significant technical changes with respect to the previous edition:

a) Optimized terms and definitions in Clause 3:

   Introduction of new terms and definitions and refining of existing ones.

b) Modified the definition of voltage bands:

   In Clause 5, the definition of voltage limits in voltage bands is added, from U_1 to U_6. The definition of voltage bands, from B4 to B7, is modified.

AVA Documents
Document Sharing Hub

c) Distinguished the difference between oscillation and power quality phenomenon:

In Clause 3, the definition of oscillation is added based on IEV 103-05-04. In 6.3, relationship between oscillation and power quality is clarified. Annex B gives a LDC oscillation typical example which has really happened in a MV&LVDC system in China.

d) Modified the recommended voltage for distribution DC network:

The factors considered in voltage values definition is clarified. And the voltage is divided in two domains, distribution domain and installation domain. The voltage recommendation in LVDC is listed corresponding to voltage bands.

e) Modified the voltage immunity level assessment:

It is mentioned in 7.2 that the assessment of voltage immunity levels of mass LVDC power electronic devices need to be further discussed, ripple as an example is introduced.

f) Added DC power quality measurement methods:

In 7.3, DC power quality measurement methods is introduced based on AC methodologies. And some additional DC power quality indices are recommended to assess the DC system.

DC electric power and power quality measurement methods are introduced in 7.4, defining the electric value integration time and frequency ranges.

Typical electric power and power quality computation methods are modified in Annex D.

g) Added an annex on MVDC system:

A use case of a typical MV&LVDC distribution system is added in Annex F, to support developments of TS of 8A and 8B on DC microgrids.

h) Added an annex on Current OS voltage level:

The voltage level applied in Current OS is introduced in Annex L to give more information on the LVDC voltage level recommendation.

The text of this Technical Report is based on the following documents:

Draft	Report on voting
8/1695/DTR	8/1704/RVDTR

Full information on the voting for its approval can be found in the report on voting indicated in the above table.

The language used for the development of this Technical Report is English.

This document was drafted in accordance with ISO/IEC Directives, Part 2, and developed in accordance with ISO/IEC Directives, Part 1 and ISO/IEC Directives, IEC Supplement, available at www.iec.ch/members_experts/refdocs. The main document types developed by IEC are described in greater detail at www.iec.ch/publications.

The committee has decided that the contents of this document will remain unchanged until the stability date indicated on the IEC website under webstore.iec.ch in the data related to the specific document. At this date, the document will be

- reconfirmed,
- withdrawn, or
- revised.

IMPORTANT – The "colour inside" logo on the cover page of this document indicates that it contains colours which are considered to be useful for the correct understanding of its contents. Users should therefore print this document using a colour printer.

Documents
Document Sharing Hub

Full document details: PD IEC TR 63282:2024

INTRODUCTION

LVDC (low voltage direct current) distribution systems have recently been recognized by a number of stakeholders as an alternative approach to provide efficient power supply to the consumers. LVDC covers a wide range of power applications from USB-C up to megawatts for aluminium melting. LVDC is seen as a solution for greener and more sustainable energy systems in developed economies as well as an alternative option for electricity access in developing countries.

In industrial applications, LVDC is utilized where processing of resources results in the production, distribution and storage of physical goods, especially in a factory or special area of a factory.

The standardization of DC voltages is a key issue, and urgent work is needed. Existing LVAC systems have different standard voltages, depending on the geography and application. LVDC distribution voltages are optimized to provide a good context for industries that import and export equipment but also for general travellers. Appropriate international LVDC voltage ranges will provide a basis for design and testing of electrical equipment and systems and ease of transition for equipment from AC to DC supply.

LVDC voltages meet the range of use cases where LVDC systems can make a difference. The list of standard voltages is as short as possible and allow for cost-effective and safe operation.

The PQ (power quality) issues in DC power systems are not identical to those in AC systems, but there are some common issues. Power quality considerations are well studied and standardized on AC power systems, but many power quality phenomena and EMC have not yet been fully identified and evaluated for DC distribution systems.

Power electronic converters/inverters add further demands. Power quality phenomena in LVDC distributed systems can be related to the structure of the entire system, and the operating condition of sources and loads. At the same time, the DC output performance of a single converter and the coordination among several converters can also result in different power quality issues and grid stability.

Requirements for power quality and EMC in LVDC distribution are established in order to provide a solid basis for the planning and operation of LVDC distribution systems. In addition, the design and configuration of the protection system is addressed with the objective of enhancing the availability of the source, the reliability, and the lifetime of the system.

Generally, the standardization of voltage level and PQ phenomena of LVDC distribution greatly stimulate the wide adoption of LVDC.

This document provides information on the following topics: standard voltages, EMC requirements, power quality, and measurement methods.

Documents
Document Sharing Hub

Full document details: PD IEC TR 63282:2024

LVDC SYSTEMS – ASSESSMENT OF STANDARD VOLTAGES AND POWER QUALITY REQUIREMENTS

1 Scope

The purpose of this document is to collect information and report experience for the standardization of voltage levels and related aspects (power quality, EMC, measurement, etc.) for LVDC systems (systems with nominal voltage up to and including 1 500 V DC).

Rationale for the proposed voltage values is given. Variation of parameters for the voltage (power quality) for their boundaries are defined. Nevertheless, some of the technical items are not exhaustively explained in this document and some gaps are identified for future work.

Attention is paid to the definition of DC voltage.

Systems in which a unipolar voltage is interrupted periodically for certain purposes, e.g. pulse voltage, are not considered.

Traction systems are excluded from this document.

This document gives technical inputs to TCs in charge of the standardization of different issues and coordinated by SyC LVDC.

2 Normative references

There are no normative references in this document.

3 Terms and definitions

For the purposes of this document, the following terms and definitions apply.

ISO and IEC maintain terminology databases for use in standardization at the following addresses:

- IEC Electropedia: available at https://www.electropedia.org/
- ISO Online browsing platform: available at https://www.iso.org/obp

3.1
nominal system voltage
suitable approximate value of voltage used to designate or identify a system

[SOURCE: IEC 60050-601:1985, 601-01-21, modified − The term has been changed from "nominal voltage of a system" to "nominal system voltage".]

3.2
DC supply voltage
line-to-line or line-to-mid-point voltage at the supply terminals

3.3
bipolar DC system
DC system comprising a positive and negative line, and a mid-point, distributed or not

Documents
Document Sharing Hub

3.4
unipolar DC system
DC system comprising a positive or a negative line, and a mid-point

3.5
DC system nominal voltage
U_n
value of the voltage by which the electrical installation or part of the electrical installation is designated and identified

Note 1 to entry: The DC system nominal voltage U_n is within the nominal band [U_2; U_3] but not always half-way between U_2 and U_3. In all cases

$$U_2 \leq U_n \leq U_3$$

Note 2 to entry: For a bipolar system, it is recommended to use a dual notation, for example, "$\pm U_{L\text{-}M}$" or "$U_{L\text{-}M}$ / $U_{L\text{-}L}$".

3.6
DC voltage deviation
voltage deviation due to the slow change in power system operation state

Note 1 to entry: Voltage deviation is the difference between actual voltage and nominal system voltage when the change rate of the average DC voltage is in the appropriate speed in order to limit the deviation in an acceptable range.

3.7
voltage unbalance
condition in a bipolar system in which the line to mid-point voltages are not equal

3.8
ripple
set of unwanted periodic deviations with respect to the average value of the measured or supplied quantity, occurring at frequencies which can be related to that of the mains supply, or of some other definite source, such as a chopper or load changes

Note 1 to entry: Ripple is determined under specified conditions and is a part of PARD (Periodic and/or random deviation). It may be assessed by instantaneous value or RMS value.

Note 2 to entry: Sources of ripple may include, but are not limited to, voltage regulation instability of the DC power source, commutation/rectification within the DC power source, and load variations within utilization equipment.

Note 3 to entry: Ripple is determined as well in percentage to the DC component and in RMS value computed in line with CISPR for conducted disturbances. Ripple can be hundreds of kHz.

[SOURCE: IEC 60050-312:2001, 312-07-02, modified – "or load changes" has been added at the end of the definition, a sentence has been added to Note 1 to entry; Notes 2 and 3 to entry have been added.]

3.9
over-voltage
voltage the value of which exceeds a specified limiting value

[SOURCE: IEC 60050-151:2001,151-15-27]

3.10
under-voltage
voltage the value of which is lower than a specified limiting value

[SOURCE: IEC 60050-151:2001,151-15-29]

Documents
Document Sharing Hub
Full document details: PD IEC TR 63282:2024

3.11
voltage swell
sudden increase of the voltage at a point in the electrical supply system followed by voltage recovery after a short period of time

Note 1 to entry: Application: for the purpose of this document, the swell start threshold is equal to the 110 % of the reference voltage (see CLC/TR 50422: 2013, Clause 3, for more information).

Note 2 to entry: For the purpose of this document, a voltage swell is a two-dimensional electromagnetic disturbance, the level of which is determined by both voltage and time (duration).

3.12
voltage dip
sudden decrease of the voltage at a point in the electrical supply system followed by voltage recovery after a short period of time

Note 1 to entry: The residual voltage can be expressed as a value in volts, or as a percentage or per unit value relative to the reference voltage.

[SOURCE: IEC 60050-614:2016, 614-01-08, modified – "Reduction" has been changed to "decrease", " electric power system" has been changed to "electrical supply system", "time interval" has been changed to "period of time", reference to sinusoidal voltage has been removed.]

3.13
voltage surge
transient voltage wave propagating along a line or a circuit and characterized by a rapid increase followed by a slower decrease of the voltage

[SOURCE: IEC 60050-161:1990, 161-08-11]

3.14
voltage supply interruption
disappearance of the supply voltage for a time interval whose duration is between two specified limits

[SOURCE: IEC 60050-161:1990, 161-08-20, modified – In the term, "short interruption (of supply voltage)" has been changed to "voltage supply interruption", the note has been deleted.]

3.15
rapid voltage change
RVC
quick transition in voltage occurring between two steady-state conditions, and during which the voltage does not exceed the under-voltage/over-voltage thresholds

3.16
oscillation
physical phenomenon characterized by one or more alternately increasing and decreasing quantities

Note 1 to entry: Oscillation in LVDC system is characterized by an electromagnetic parameter (voltage current, power, etc.) in the system alternately increasing and decreasing. The phenomenon can be caused by interference, parameter mismatch or control stability issues.

[SOURCE: IEC 60050-103:2019,103-05-04, modified – Note 1 to entry has been completely changed.]

3.17
DNO
distribution network operator
party operating a distribution network

Documents
Document Sharing Hub
Full document details: PD IEC TR 63282:2024

3.18
DSO
distribution system operator
party extending the function of a DNO to incorporate active management of some power resources

3.19
U_+
positive voltage
voltage between the positive line and the mid-point

Note 1 to entry: Only defined for bipolar DC systems.

3.20
U_-
negative voltage
voltage between the negative line and the mid-point

Note 1 to entry: Only defined for bipolar DC systems.

3.21
balanced voltage
U_b
average of the positive and the negative voltage

Note 1 to entry: $U_b = (|U_-| + |U_+|)/2$.

Note 2 to entry: Only defined for bipolar DC systems.

3.22
unbalanced voltage
U_u
average difference of the positive and the negative voltage

Note 1 to entry: $U_u = (U_+ - U_-)/2$.

Note 2 to entry: Only defined for bipolar DC systems.

3.23
mid-point
common point between two symmetrical circuit elements the opposite ends of which are electrically connected to different line conductors of the same circuit

Note 1 to entry: Only defined for bipolar DC systems.

[SOURCE: IEC 60050-195:2021, 195-02-04, modified – "of which the opposite ends" has been changed to "the opposite ends of which" and the note to entry has been added.]

3.24
under-voltage ride through
capability of equipment to stay connected and continue functioning during voltage dips

3.25
DC voltage
voltage equal to its average value during a defined time interval

3.26
over-voltage ride through
capability of equipment to stay connected and continue functioning during voltage swells

AVA Documents
Document Sharing Hub

Full document details: PD IEC TR 63282:2024

4 Structure of LVDC systems

4.1 General

The low-voltage DC systems described consist of loads, applications, electricity generation devices, and storage devices that are connected with each other with a direct current (DC) system/installation. Thus, as far as the recommended voltages and power qualities of certain LVDC systems are concerned, different analysis dimensions and elements are taken into consideration, including different architectures, operation modes, etc.

NOTE A LVDC system includes public and private LVDC systems. It is independent of the physical dimensions, electrotechnical properties and operating modes of the infrastructure. Installations can be very small or large in terms of power and geographical extent and use any voltages and number of voltage levels.

4.2 Architecture

Several use cases concerning existing technologies and projects have been introduced to support the analysis and classification of LVDC systems.

Details and examples can be found in Annex E, Annex F, Annex G and Annex H. Formal use cases are also under work in the frame of the SyC LVDC WG2.

Unipolar DC systems are designed with two output lines and bipolar DC systems with three output lines. Taking the earthing into account, they can be divided into TN-S system and IT system as shown in Figure 1.

In the TN-S system, the mid-point connection (M) is directly connected to the protective earth (PE). While in the IT system, the mid-point connection is not directly connected to the protective earth (PE), and there are intentional (by design) or unintentional impedances which are between conductors and earth.

Documents
Document Sharing Hub

Full document details: PD IEC TR 63282:2024

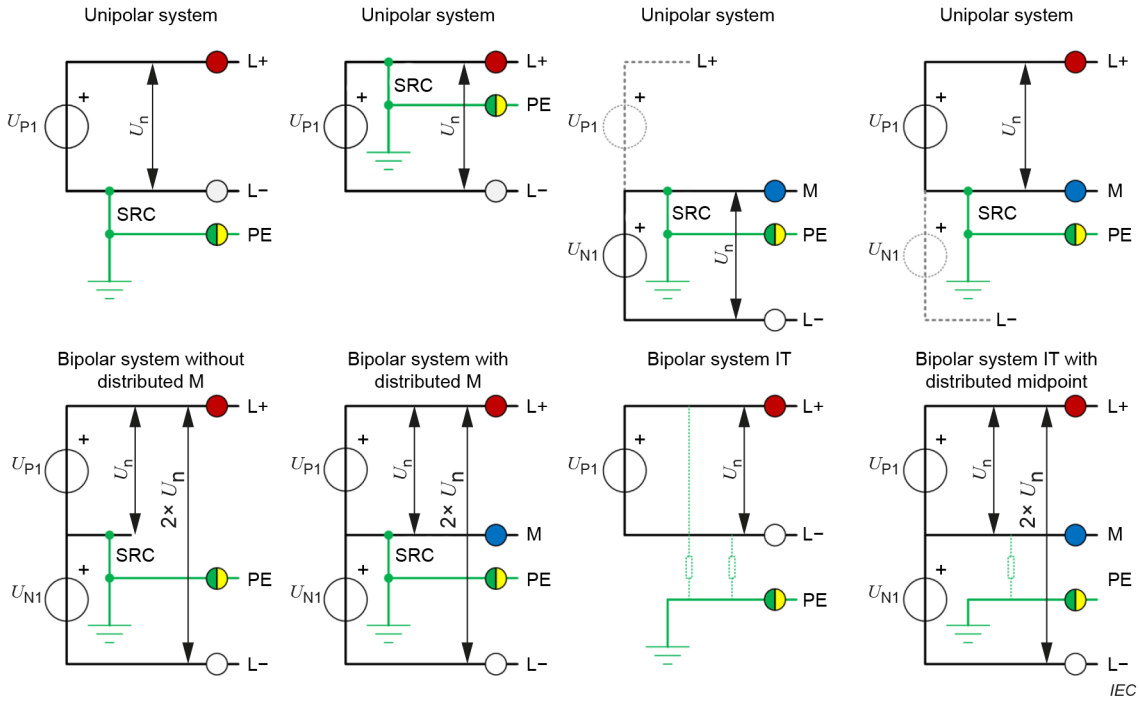

Key

U_{P1} voltage source between the positive line and the mid-point

U_{N1} voltage source between the negative line and the mid-point

U_n DC system nominal voltage

NOTE All IT systems will have impedances between conductors and earth. These impedances can be parasitic and poorly defined or can be inserted by design.

Figure 1 – Unipolar, balanced and bipolar DC systems

4.3 Operation modes

4.3.1 Passive DC systems

In passive DC systems, most of the integrated sources, which need control objectives as an input from outside, can be either voltage source or current source. The control strategy of passive sources is frequently based on master-slave control and the energy balance margin of the system mostly relies on the capability of the voltage source. Normally, the voltage source is designed to support the power supply of the system.

NOTE A passive device/load or source (other than a protective device) has not been programmed to be capable of reacting to changes in system variables (voltage, power); for example, a directly connected battery is a passive source.

In a passive DC system, passive sources and devices, possibly combined with active sources and devices, determine the behaviour of the installation.

4.3.2 Active DC systems

In active DC systems, nearly all the sources and loads are connected to the DC bus by self-controllable electronic devices. The control strategies of active sources are based on droop control and the energy balance of the system is realized automatically by tracing the U-I curves configured in the devices. The normal operation voltage band can be adjusted by different configurations of control parameters in devices.

Documents
Document Sharing Hub
Full document details: PD IEC TR 63282:2024

NOTE An active device/load or source (other than a protective device) can measure and control independently and is programmed to be capable of reacting to changes in system variables (voltage, power), serving to maintain system integrity.

In an active DC system, the active devices determine the behaviour of the installation. It has no passive sources. Passive loads do not dominate the behaviour of the system.

5 LVDC voltage division

5.1 General

The voltages are divided into different levels for temporary and continuous operation.

Between zero and maximum, the voltages are divided into 6 different stages: U_1 ... U_6.

To cover steady state and transient voltage levels, a matrix with all the voltages, voltage bands, operating states and areas is made. The matrix is presented in Figure 2. See Annex J for the detail of voltage with respect to earth.

5.2 Voltage bands

The range between two voltages is called a voltage band. Voltage bands are useful for describing voltage limits without going into the level of detail of time limits. U_i corresponds to the upper limit of band B_i (i = 1, 2, 3, 4, 5, 6).

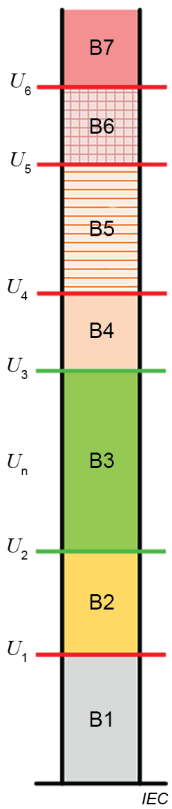

Figure 2 – Voltage bands in DC systems

– U_1: Undervoltage disconnecting voltage

  Minimal voltage level where critical devices (e.g. controller, communication gateways) can operate.

Documents
Document Sharing Hub
Full document details: PD IEC TR 63282:2024

– U_2: Minimum voltage for continuous operation with full functionality

  Minimal voltage level where devices can operate. For sources, this value is considered without cable losses. For loads, a lower value can be considered due to cable losses.

  NOTE 1 The voltage can be lower for the load because of the cable losses.

– U_3: Maximum continuous operating voltage

  The maximum voltage level below which devices can operate in steady-state conditions. Sources limit their output to keep the voltage below U_3

– U_4: Maximum temporary operating voltage

  The maximum temporary voltage level below which devices can operate.

  NOTE 2 Such higher voltage can be caused by converters going to unloaded conditions and the fully charged state of capacitors (in AC systems it is called a swell.) This value is important for protection devices like RCD, etc. This defines the maximal level that can be in a system.

  Source unidirectional converters which are unable to discharge their respective capacitor when transitioning from the loaded to unloaded condition could temporarily operate at higher voltage.

– U_5: Overvoltage disconnecting voltage

  Minimum voltage at which overvoltage surge protective devices start to conduct.

  NOTE 3 This is sometimes called breakdown voltage.

  Overvoltage protective devices do not react between U_4 and U_5 (on transients due to charging of capacitors for example).

– U_6: Maximum voltage that equipment overvoltage protection devices clamp

  This voltage is defined to specify and coordinate amongst transient voltage suppressors in sensitive equipment, such as equipment with semiconductor devices, against overvoltage.

  NOTE 4 The overvoltage protection is normally in conformity with the overvoltage category and ensures that U6 is not exceed.

– B1: Blackout band (0 … U_1)

  Longer events will cause a shutdown of the whole system. This band is temporarily passed during the start-up of the system, e.g., for pre-charging.

– B2: Critical band (U_1 … U_2)

  This is the band to which the voltage can drop below the normal operation band due to high overload.

  NOTE 5 Critical devices can operate in this voltage band.

– B3: Nominal band (U_2 … U_3)

  This is the normal operation band.

– B4: Switching, commutation and protection devices operation band (U_3 … U_4)

  In this band, the voltage can overshoot or rise due to a sudden change of current.

– B5: Overvoltage protection devices non-operating band (U_4 … U_5)

  Surge protection devices don’t clamp the voltage in this band.

  NOTE 6 The voltage can reach this band due to the operation of switching or protection devices. This can lead to capacitor charges even if they should be mastered.

– B6: Overvoltage protection devices operation band (U_5 … U_6)

  Surge protection devices clamp the voltage in this band.

– B7: Prohibited band (U_6 … ∞)

  In this band, permanent equipment damage is very likely.

Documents
Document Sharing Hub

Full document details: PD IEC TR 63282:2024

5.3 Operation ranges with respect to DC voltage and time

To achieve continuity of operation, 4 ranges are defined, of which 3 ranges (R1 to R3) are transient ranges and 1 range (R4) is the steady range. These ranges can occur routinely or in exceptional situations. In each range, the allowed overvoltage and dynamics are different. Voltage bands are divided in these 4 ranges. See Figure 3.

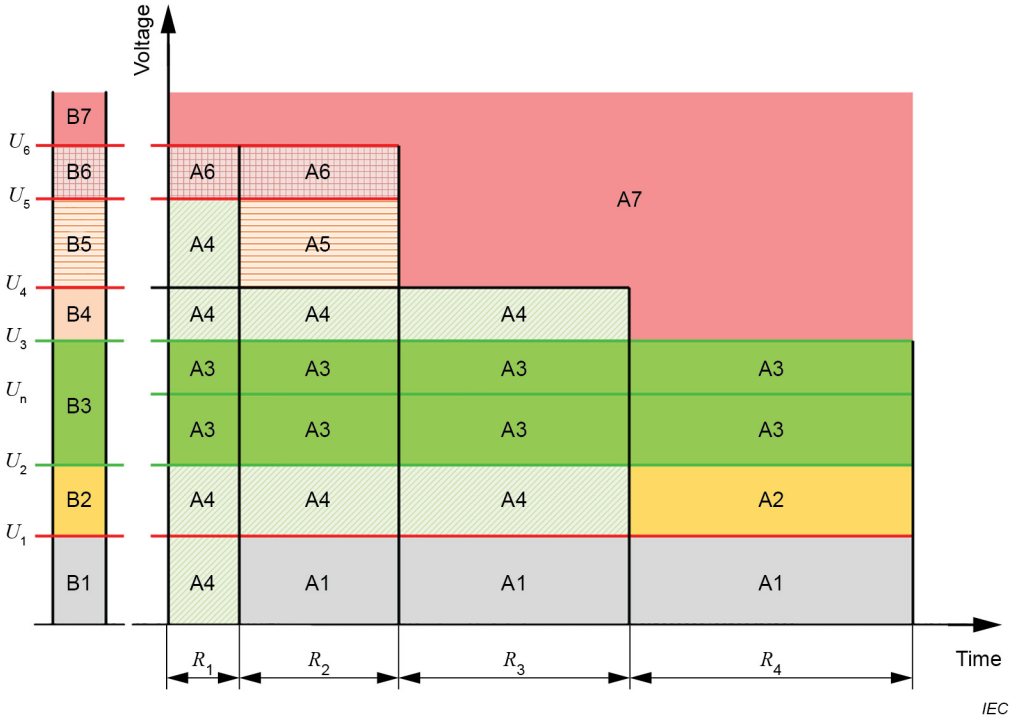

Figure 3 – DC Voltage areas for safe interoperability

To account for time-limited capabilities of the system components, the following time-limited states are defined in the graphic.

NOTE In Figure 3, the duration of the states only indicates that:

R1 < R2 < R3 < Continuous operation (R4)

States R1 through R3 are transient states and can have different durations.

– R1: Transient range

  The transient state is limited to a very short time. After being in the transient state, the system will return to a steady state.

– R2: System fault range

  The state involves, or is the result of, failure of a system circuit or item of system plant or equipment or apparatus. In this state, the system normally requires the immediate disconnection of the faulty circuit, plant or equipment or apparatus from the power system by the tripping of the appropriate circuit-breakers.

– R3: Voltage control range

  In this state, action is required by the system to address system balance issues.

– R4: Continuous operating range

  The system can remain in this state indefinitely.

Documents
Document Sharing Hub
Full document details: PD IEC TR 63282:2024

5.4 States

The area between these voltages and states is defined as follows:

– A1: Blackout state

  Supply in this area is insufficient for operation to be maintained.

– A2: Emergency state

  The voltage in this area indicates that the supply is under stress. Loads are still able to operate correctly, but perhaps not meet all performance requirements. Action can be taken to reduce the stress on the system, for example through load-shedding or the introduction of additional power sources.

– A3: Normal state

  For the normal operation of a DC system, the voltage difference between the power terminals is maintained between U_2 and U_3 under all conditions. All equipment performance requirements are met within this band.

  Operation between these limits includes all normal operating states of the system, and normal droop control ranges. The voltage delivered to a load is within this band including the $I \times R$ voltage drop in the cabling. Annex C gives the example of the supply radius in DC distribution systems.

– A4: Abnormal state

  In exceptional circumstances, voltage can stray into this area for an extended period. Installation and equipment are designed to withstand this, and continue to operate normally, but possibly with reduced performance. Actions are taken to modify power input to rebalance the system.

– A5: Overvoltage state without clamping

  In this area, the voltage can increase due to operation of switching or protection devices. Overvoltage protection devices do not clamp these voltage overshoots.

– A6: Overvoltage state with clamping

  In this area, the voltage can overshoot due to operation of switching or protection devices. Overvoltage protection devices clamp these voltage overshoots.

– A7: Prohibited state

  In this area, permanent equipment damage is very likely. If technically possible, all power sources are switched off.

6 Power quality phenomena relevant to LVDC networks

6.1 General

Voltage quality is important for ensuring that systems function as intended. Voltage quality is specified in order to provide a system designer with a reference to design the supply, load and distribution system. Voltage quality requirements can be different for different use cases and system layouts. It is the designer's responsibility to ensure that regardless of the system layout and network topology, the voltage variation, transients and other voltage disturbances do not exceed the application and use-case specific limits of the operating ranges, nor the values tolerated by the devices used in the installations.

Ideally, a perfect voltage source is considered, with a stable voltage within a normal voltage band. Voltage quality is defined in terms of limits to deviations outside this band caused by different disturbances. These deviations outside this band or disturbances can be continuous or discontinuous.

Documents
Document Sharing Hub

Full document details: PD IEC TR 63282:2024

Use case, application and electromagnetic environment specific compatibility levels are defined for temporary voltage variation, voltage dips and swells, and the maximum duration and magnitudes of DC voltage fluctuations. Annex A gives the examples of PQ waveforms collected from a certain LVDC project.

The characteristics of good power quality are:

– voltage is maintained within agreed limits in normal operation (6.2 to 6.9);
– ripple and high frequency voltages/current disturbances are below permissible limits (6.5).

6.2 Relationships between voltage band and power quality in LVDC systems

For the normal operation of a DC system, the voltage at a specific/any node is maintained at the target operating value for each operating point within limited variations under all conditions. A constant DC voltage indicates a balance of the power injected into or exported from the DC system.

DC system control is designed to ensure that at any transmission power level and in any operating mode, the line-to-earth DC voltage in TN systems and the line-to-line or line-to-mid-point DC voltage in IT systems remain within the normal operating range of the DC voltage.

There are some events that can cause the DC voltage to deviate transiently or temporarily from the normal operating band or to fluctuate. The irregular operation or trip of a system component can result in a steep voltage dip, a high voltage rise or voltage fluctuations showing up as DC power quality problems. The frequency and magnitude of the events leading to these DC voltage excursions or fluctuations need to be limited.

As an example of a time-domain voltage acceptability curve for the DC voltage, Figure 4 shows voltage band and power quality that are to be considered in DC systems. Annex K gives the example of voltage profiles in CIGRE.

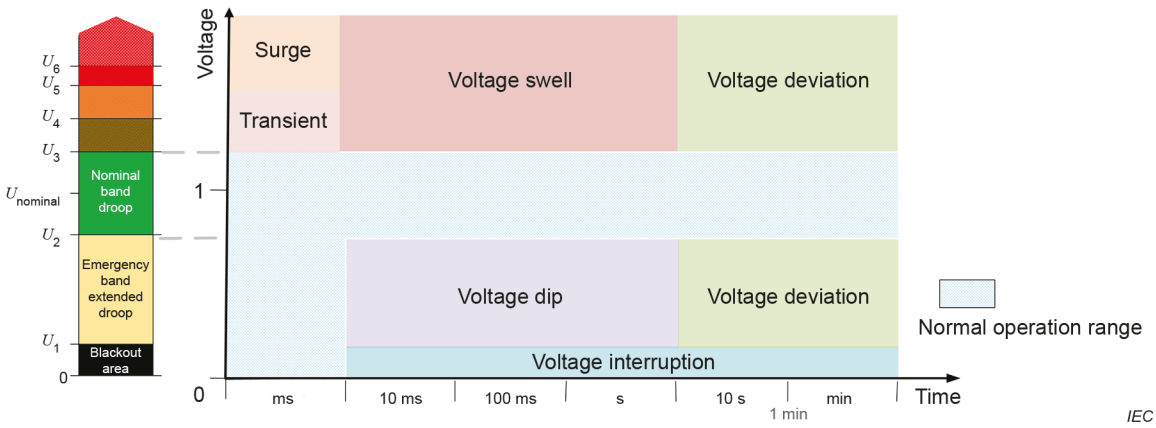

Figure 4 – Relationships between voltage band and power quality in LVDC systems

6.3 Relationship between oscillation and power quality in LVDC systems

When a disturbance is applied to a system with a specific structure (impedance parameters) and control parameters, an oscillation phenomenon can occur due to the mismatch between control and impedance parameters. Oscillation as such is not a PQ phenomenon but it will influence the PQ. Two common causes of oscillation are the measurement system impacted by a specific frequency interference and the mismatch of control parameters between multiple devices.

Figure 5 gives an example of voltage oscillation in a real system.

Documents
Document Sharing Hub
Full document details: PD IEC TR 63282:2024

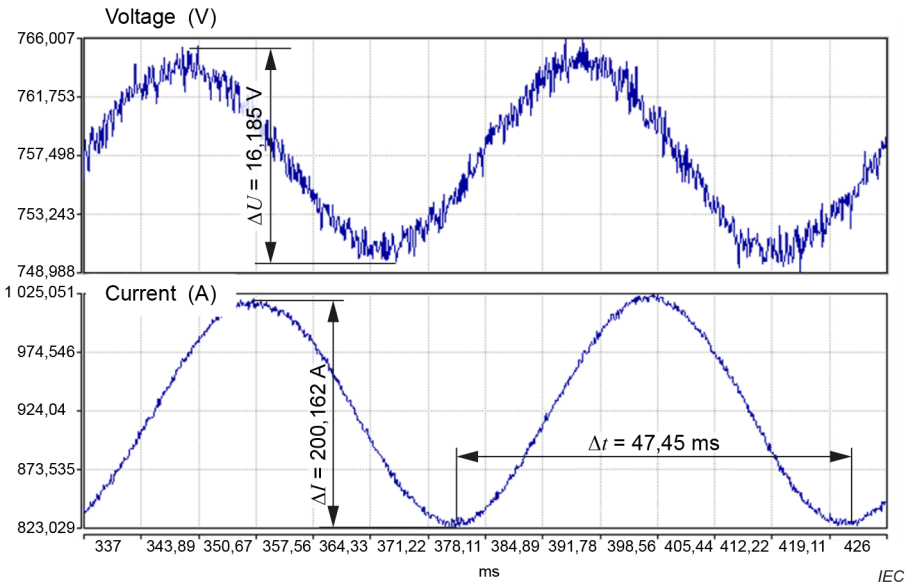

Figure 5 − Oscillation example

Figure 5 shows that an oscillation with frequency of about 21 Hz occurs in the system. The voltage oscillation amplitude is about 16 V, and the current oscillation amplitude is about 200 A. The system protection acts and stops the oscillation.

See Annex B for details on the oscillation characteristics.

The oscillation phenomenon is closely related to the load.

The system oscillation can be controlled by adjusting the modes that cause the system oscillation. For example, by strengthening the shielding of the measuring system or modifying the control parameters, system oscillation can be suppressed.

The oscillation can cause variation of some power quality indices such as fast voltage fluctuation, flicker and DC ripple (equivalent to harmonics and inter harmonics, such as the recordings in Figure 5) depending on oscillation frequencies.

6.4 Supply voltage deviation

The DC voltage in the system can be controlled by converter controls within specified limits for all power flows, including overload rating. If a central DC voltage controller is used, its response time is adequate to meet the specified performance.

The above considerations apply to undisturbed operation. Possible deviations can be caused to the following:

– If the operating DC voltage is outside the steady-state DC voltage band, then the system and system elements can disconnect and shut down when a safe operation is not guaranteed.
– If the operating DC voltage is outside the normal operating band, then the system and system elements will not meet all performance criteria.

Large voltage deviations from the nominal values will shorten the life of electrical equipment, possibly threaten system stability and increase the cost of network operation. Equipment operating under this condition in a repetitive manner or for long periods of time can malfunction, breakdown or become irreversibly damaged.

Documents
Document Sharing Hub
Full document details: PD IEC TR 63282:2024

The equipment can withstand voltage excursions as defined in Figure 4 without damage. Active elements operate safely and contribute to a damping of these excursions and fluctuations. Protective devices operate only at higher voltages than defined in Figure 4 as they can result in even more severe excursions and fluctuations. However, equipment can disconnect in case of unsafe operation or potential equipment damage.

Particular attention is paid to under-voltage ride through capabilities and over-voltage ride through capabilities of active elements as this will be very important for the stability of the system during temporary fault situations.

In steady state operation of a DC system, there is a balance between the power injected into the DC system and the power withdrawn from the DC system, including losses. The main objective of the primary control is to limit the DC voltage deviation to an acceptable range and to find a new balanced operating point for the power flow in the DC system.

6.5 Ripple and high frequency interference

In a LVDC system, there is no fundamental frequency, and the concept of harmonic distortion does not apply. Previous definitions of power quality typically involving harmonic distortion limits in AC systems are not applicable. A comparison of average DC and AC RMS values could be the basis for setting power quality indices for LVDC systems.

Since a power converter connected to a DC distribution bus averages DC current and some other frequency components, which are a function of the converter internal switching frequency and power topology, the impact of the power converter on the DC power bus is evaluated. Any AC component of load current that flows in the LVDC bus will result in a ripple voltage appearing at all points along the bus. The ripple currents flow between connected loads and the DC power source. The fast switching of converters and associated rapid change of potentials will generate common mode (CM) voltage level shifts, which can interfere with communication or control systems. Perturbations in both differential mode (DM) and common mode voltage cannot be ignored.

If a pulse width modulated (PWM) converter is used to produce the DC voltage, a high-frequency waveform caused by the pulse width modulation switching is superimposed on the DC and AC side and shows up as interference. The interference also can come from converter-based loads connected to the DC bus.

Periodic and random variations are given for the following three bands, the interference frequency bands can be defined as < 9 kHz, 9 kHz to 150 kHz and > 150 kHz in line with generic EMC standards:

a) low-frequency interference:

   source frequency and its harmonics only (AC sources only), the interference frequency bands can be defined as < 9 kHz, 9 kHz to 150 kHz and > 150 kHz in line with generic EMC standards;

b) switching interference:

   power converters switching frequency and its harmonics;

c) total, including spikes (the bandwidth of the measuring equipment is stated).

Some organizations have mentioned ripple as DC harmonics and presented several methods for calculation.

The main adverse effect of ripple, beside additional losses, can be interference with the operation of system components and interfering the operation of neighbouring systems (power and communication) through radiated and conducted interference.

Documents
Document Sharing Hub

Full document details: PD IEC TR 63282:2024

LVDC converters generate characteristic and non-characteristic ripple voltages on the DC system. Ripple voltages drive ripple currents through the DC system. The characteristic ripple voltages depend on the DC voltage, current, DC circuit reactance, converter topology, converter switching frequency and converter control strategies whereas non characteristic ripple voltages are caused by measurement and control errors. Resonance conditions within the DC system can result in potential amplifications.

As it can be expected that more than one equipment can affect the ripple levels at a specific DC node, sufficient headroom is specified between maximum acceptable ripple levels and the DC system equipment. All users are appropriately designed to make their individual contribution within the allowed individual share. Resonance effects are taken into account. The DC system operator provides information to evaluate potential ripple resonances.

The connection of any component does not result in levels of distortion or fluctuation of the existing DC system voltage and current at the connection point, exceeding those agreed on.

Studies to characterize distortion of voltage/current waveforms at the point of the connection are performed. These take into consideration the impedance of a DC circuit at the ripple frequency and background ripple of the existing DC system. Ripple generation of new connections can be subject to verification of compliance at commissioning.

There are also harmonic distortion requirements for the connection to the AC system for power generation and use.

6.6 Voltage swell

Voltage swell phenomena can frequently occur, but it is unpredictable and random. Depending on the magnitude and duration, voltage swell can affect different types of loads differently for the same voltage swell event. Recommended limitations of voltage swells A4 and A5 in Figure 3 are still under consideration.

Where assessment is performed or statistics are collected to be provided to network users or authorities, for measurements of voltage swell and dip in DC systems, it is suggested that the number of equipment affected by each event is detected and stored.

All connections are able to safely operate without tripping during and following over-voltage events to support regulation of the DC System voltage back to pre-disturbance levels. The new connection is able to withstand the maximum sustained over-voltage limit and will have an over-voltage protection consistent with the existing system.

The size and response characteristics of DC energy dissipation devices are also consistent with the operation of the existing DC system.

An example of voltage swell can be seen in Figure 6. Normally, swell threshold and time duration are used to identify a voltage swell event.

Documents
Document Sharing Hub

Full document details: PD IEC TR 63282:2024

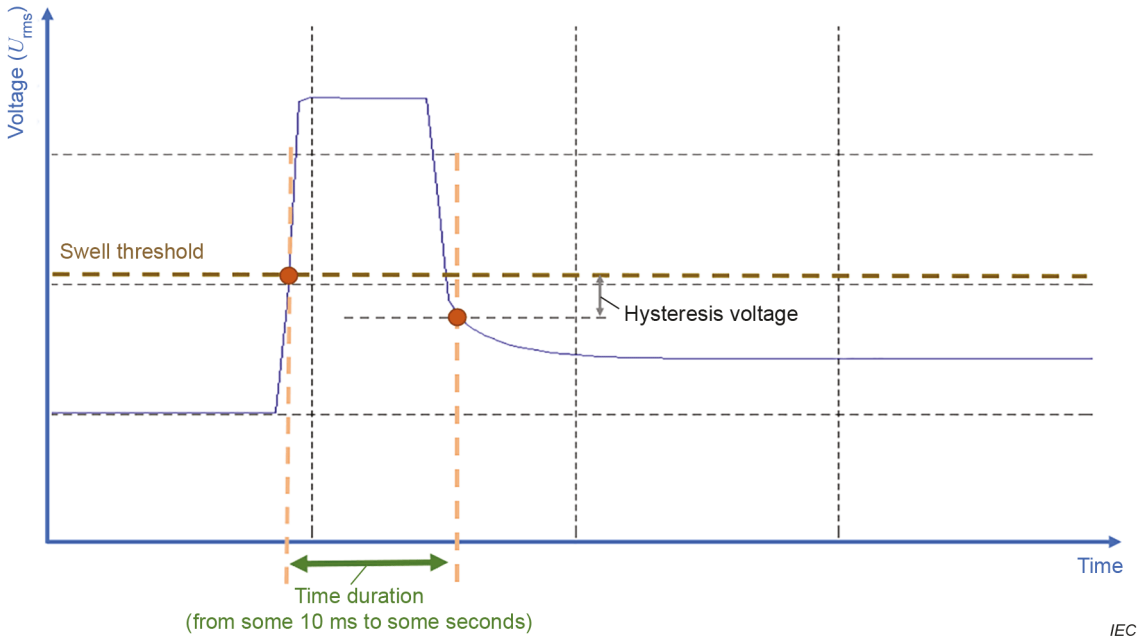

Figure 6 – Voltage swell example

6.7 Voltage dip

Voltage dips typically originate from system faults, load faults (protection, lightning, short-circuits, disconnection, etc.) in the public network or in network users' installations and appliances, or from direct connection of capacitive loads. The annual frequency depends on the reliability of the electrical installation and its supply system. Moreover, the distribution over the year can be very irregular.

The power quality characteristics of individual events are defined for each equipment, by residual voltage and duration, irrespective of the specific shape of the voltage variation.

For DC measurements, the number of equipment affected in each event can be detected and stored for more information.

Generally, according to the network user connection, or the concrete situation, line-to-line, line-to-earth and line-to-mid-point voltages are considered.

All connections are able to safely operate without tripping during and following under-voltage events to support regulation of the system DC voltage back to pre-disturbance levels. Fault-tolerant transient under-voltage characteristics in terms of retained voltage levels depending on duration of the event for the DC system are also defined. Following fault clearance, the connection returns to normal operating conditions subject to normal DC voltage and power control, within a defined time period. The under-voltage ride through requirements is defined to ensure the desired behaviour.

DC voltage excursions can be experienced in the whole DC system. Power exports from or imports to the DC system stay within the limits that can be permanently balanced by converter station controls. Thus, any power unbalance will have direct impact on the DC voltage. The trip of a converter station can result in a steep voltage dip or high voltage rise depending on its function as power import or export.

An example of voltage dip can be seen in Figure 7. Normally, dip up threshold, dip down threshold and time duration are used to identify a voltage dip event.

Documents
Document Sharing Hub
Full document details: PD IEC TR 63282:2024

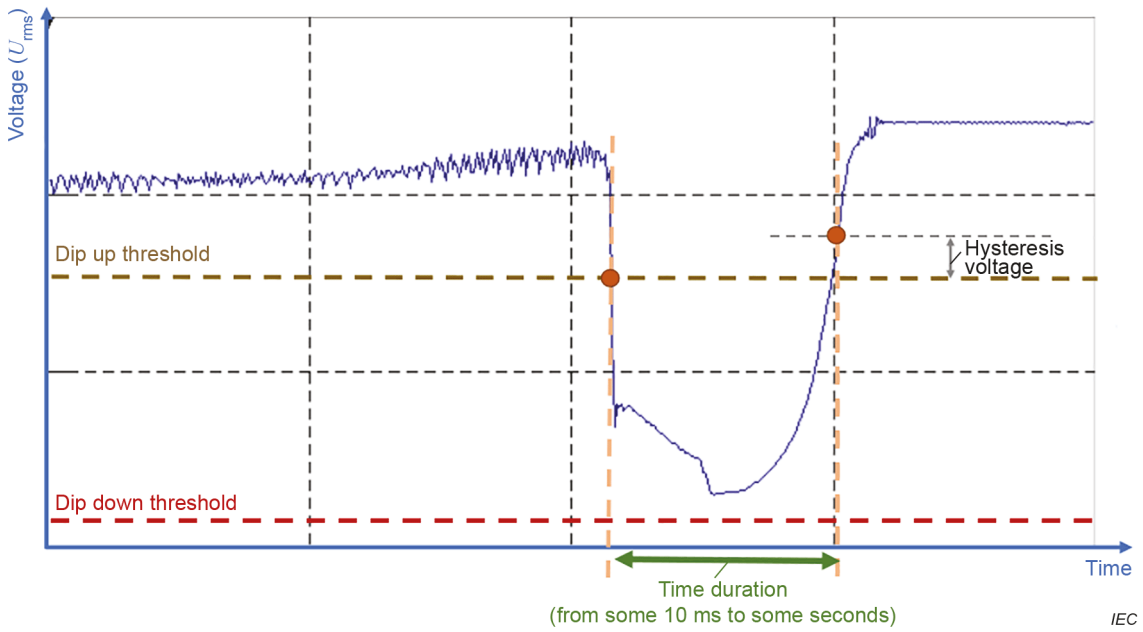

Figure 7 – Voltage dip example

Similar to AC systems, voltage dips in DC systems are likely to cause equipment and devices to malfunction, loss of data and general nuisance for the users.

It is also noteworthy that LVDC systems are less susceptible to voltage dips and swells occurring in the AC system when the interconnecting converter actively controls the DC voltage. In data centers, today the overall reliability of power distribution is based on the use of UPS systems. A similar result could be ensured by active DC systems with the appropriate requirements. Some loads, such as computers and emergency lighting, cannot be used in systems affected by disturbances in the AC utility system. Both the software and the hardware of important computer systems can be damaged due to voltage transients or power outages, and lighting used to illuminate emergency exits or important processes cannot be shut off.

6.8 Voltage supply interruption

On unipolar systems, a voltage interruption begins when the voltage falls below the interruption threshold.

On bipolar systems, a voltage interruption occurs when the line-to-mid-point voltage drops below an interruption threshold.

The interruption threshold is generally 5 % or 10 % of the nominal voltage.

6.9 Rapid voltage change (RVC)

Under normal operating conditions (excluding events), rapid voltage changes do not exceed indicative values.

Rapid voltage change indicative values are in the range of 3 % to 5 % of the nominal voltage.

These values specifically refer to relative steady-state voltage changes aggregated over very-short time intervals e.g. 200 ms time intervals (all variations during these intervals are aggregated in the so-called steady-state voltage). They are based on the usual design criteria for high power supply or load starting, for example.

Documents
Document Sharing Hub
Full document details: PD IEC TR 63282:2024

An example of RVC event can be seen in Figure 8. Normally, the threshold of RVC in voltage amplitude is between the swell threshold and the dip up threshold.

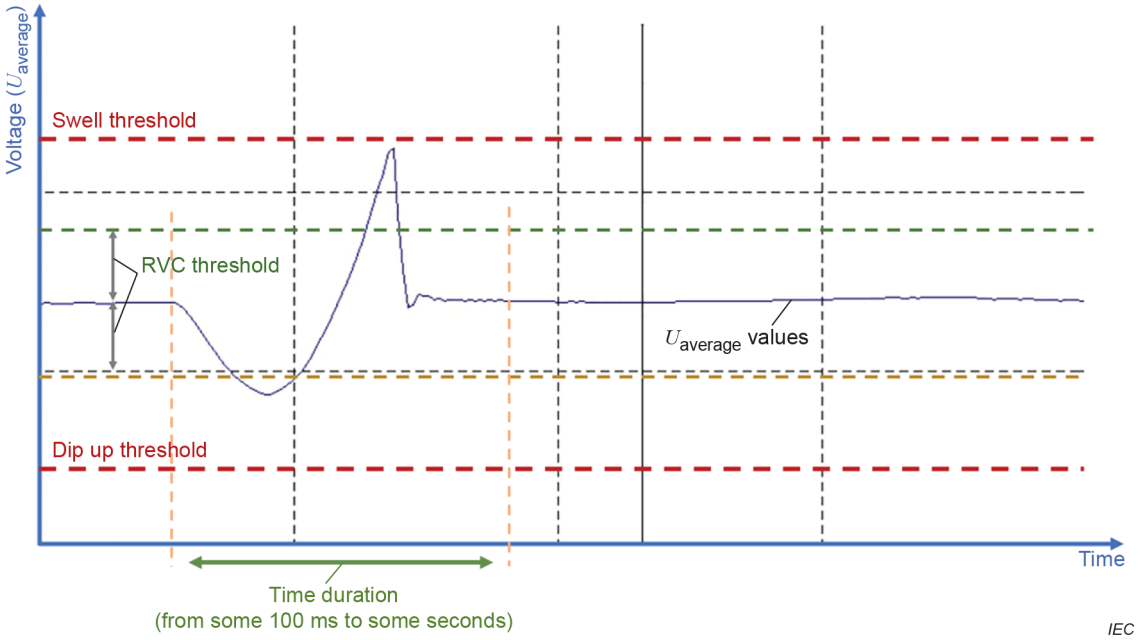

Figure 8 – RVC event: example of a change in average voltage that results in an RVC event

Rapid changes to DC voltage can originate from events in the DC system or from the external AC system.

6.10 Voltage surges

Voltage surges are transient overvoltages with durations of several microseconds. A transient overvoltage due to lightning, switching, or other causes can exceed the insulation rating of the electrical equipment causing degradation of insulation and damage to the equipment.

Figure 9 gives an example of voltage surge in a real system.

Documents
Document Sharing Hub
Full document details: PD IEC TR 63282:2024

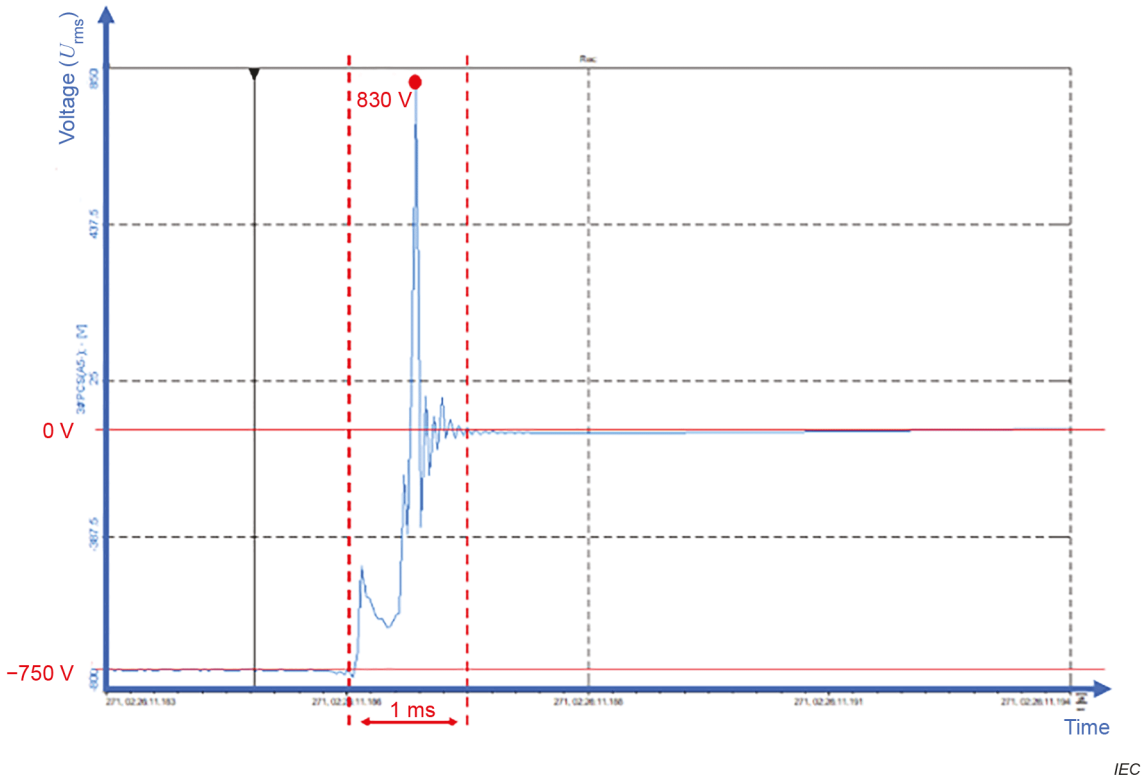

Figure 9 – Example of voltage surge

When a circuit is struck by atmospheric effect or an inductive load or a large load is switched on/off, it often produces a high switching overvoltage. The switching action can cause a high transient voltage or current surge. For example, when the relay coil of a 6 V DC relay is disconnected, the voltage surge of 300 V to 600 V can appear, depending on the coil type. When a large capacitor bank is connected to the DC system, a current surge will occur, unless the connection is controlled, which will transiently decrease the system voltage. Voltage surge phenomenon is increasingly endangering the safety of the automation equipment. Eliminating surge interference and preventing surge damage have always been the core issues related to the safe and reliable operation of automation equipment. In most cases, voltage surge can damage electronic device circuit and its components. The degree of damage is closely related to the voltage withstanding strength of components and the convertible energy in the circuit.

IEC 61204 series defines EMC, performance, and safety requirements for LV DC supplies. Similar limits are considered for LVDC systems.

6.11 Voltage unbalance

In case the currents through the positive and the negative lines are not perfectly matched because of unequal load distribution, the positive and negative voltages can become unequal. The condition in which the positive and negative voltages differ is referred to as voltage unbalance. The amount of voltage unbalance can vary continuously as the loads and generators in the system are randomly turned on or off by the customers.

Documents
Document Sharing Hub
Full document details: PD IEC TR 63282:2024

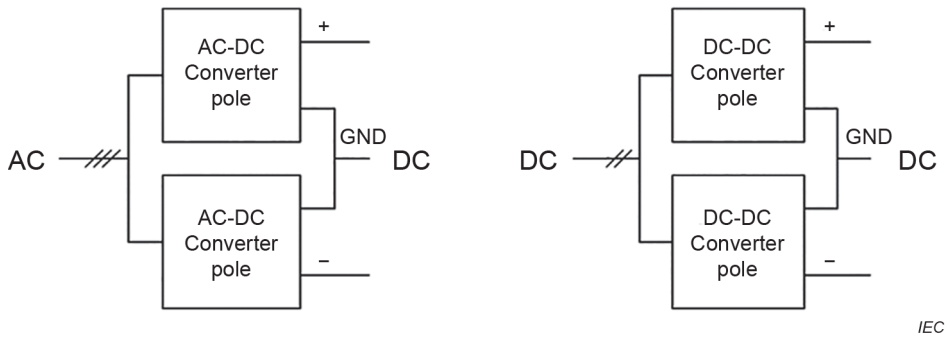

Figure 10 – A schematic of a bipolar system (the CIGRE B4 DC test system)

The bipolar LVDC system can be regarded as two series connected unipolar LVDC systems, namely a positive and a negative part (see Figure 10). The positive and negative voltages are in that case separately controlled by means of separate power converters. Nevertheless, single power converters exist with three output terminals for connecting to a bipolar LVDC system such as neutral-point clamped converters and three-level DC-DC converters. Instead of controlling the positive and the negative line-to-mid-point voltage, three-terminal converters control the balanced and unbalanced voltage, as defined in 3.7.

7 Guidance for voltages and power quality in LVDC system

7.1 Considerations for voltages in distribution DC networks

7.1.1 General

TC 8 is in charge of specifying the recommended voltages for LVDC distribution as one of the system aspects. These recommendations are expected to be the result of a factual state of the art. Hereafter are the proposals for implementation in IEC 60038.

NOTE Information on preferred voltage values in different countries are provided in Annex I.

7.1.2 Factors considered to define voltage values

Different factors have been considered to define these values, such as:

– application domain,
– network topology and architecture (radial or meshed system, distributed sources, etc.),
– multiplication by two factors for converters,
– compatibility with AC voltage levels for easy conversion with some existing types of converters (depending on the converter design, the compatibility is easy to fulfil),
– existing DC applications or available products,
– DC voltages in existing standards (IEC 60664-1 coordination standard, etc.),
– safety/electric shock in case of fault protection (keep U_4 as the DC limit used in IEC 60364-4-41:2005/AMD1:2017, Table 41.1 to allow safety to be ensured),
– safety/fire risk, corrosion (batteries, arcing, PV, etc.),
– supply radius/transmission capacity (voltage drop, thermal capacity of cables),
– system efficiency (losses in converters, in cables and all the other components),
– sustainability (life cycle of different components, raw materials, etc.),
– insulation (coordination),
– clear identification (between AC and DC).

Documents
Document Sharing Hub
Full document details: PD IEC TR 63282:2024