PD IEC/TS 62056-6-9:2016

BSI Standards Publication

Electricity metering data exchange — The DLMS/COSEM suite — Part 6-9: Mapping between the Common Information Model message profiles (IEC 61968-9) and DLMS/COSEM (IEC 62056) data models and protocols

Documents
Document Sharing Hub

Full document details: PD IEC/TS 62056-6-9:2016

National foreword

This Published Document is the UK implementation of TS 62056-6-9:2016.

The UK participation in its preparation was entrusted to TechnicalCommittee PEL/13, Electricity Meters.

A list of organizations represented on this committee can be obtained on request to its secretary.

This publication does not purport to include all the necessary provisions of a contract. Users are responsible for its correct application.

© The British Standards Institution 2016.
Published by BSI Standards Limited 2016

ISBN 978 0 580 89727 6
ICS 17.220.20; 35.100.01; 91.140.50

Compliance with a British Standard cannot confer immunity from legal obligations.

This Published Document was published under the authority of theStandards Policy and Strategy Committee on 31 May 2016.

Amendments/corrigenda issued since publication

Date	Text affected

Documents
Document Sharing Hub

Full document details: PD IEC/TS 62056-6-9:2016

IEC TS 62056-6-9

Edition 1.0 2016-05

TECHNICAL SPECIFICATION

colour inside

Electricity metering data exchange – The DLMS/COSEM suite – Part 6-9: Mapping between the Common Information Model message profiles (IEC 61968-9) and DLMS/COSEM (IEC 62056) data models and protocols

INTERNATIONAL
ELECTROTECHNICAL
COMMISSION

ICS 17.220.20; 35.100.01; 91.140.50

ISBN 978-2-8322-3328-3

Warning! Make sure that you obtained this publication from an authorized distributor.

® Registered trademark of the International Electrotechnical Commission

Documents
Document Sharing Hub

Full document details: PD IEC/TS 62056-6-9:2016

CONTENTS

FOREWORD....4
INTRODUCTION....6
1 Scope....7
2 Normative references....7
3 Terms, definitions and abbreviations....8
3.1 Terms and definitions....8
3.2 Abbreviations....8
3.3 Notation and terminology....8
4 Reference environment....9
4.1 General reference architecture....9
4.2 Reference use cases – Generalized use case....10
4.3 Use case examples....11
4.3.1 General....11
4.3.2 UC1: ReadMeterOnSchedule....11
4.3.3 UC2: ReadMeterOnDemand....12
4.3.4 UC3: ConfigureTariffRemotely....13
4.3.5 UC4: DisconnectReconnectRemotely....14
4.3.6 UC5: ManageLoadByRelayControl....15
4.3.7 UC6: ReportOnQualityOfSupply....16
4.3.8 UC7: ManageLoadByDemandLimits....17
4.3.9 UC8: SynchronizeClock....18
4.3.10 UC9: ChangeFirmware....19
4.3.11 UC10: RegisterMeter....20
4.3.12 UC11: SuperviseMeter....21
5 CIM – DLMS/COSEM translation....21
5.1 CIM message construct....21
5.2 CIM verb mapping....21
5.3 CIM noun mapping....22
5.4 CIM data type mapping....23
5.5 OBIS code mapping to CIM ReadingType enumerated code....23
5.6 OBIS code mapping to CIM EndDeviceControlType enumerated code....39
5.7 OBIS code mapping to CIM EndDeviceEventType enumerated code for UC8, UC9 and UC11....41
5.8 CIM attributes mapping to DLMS/COSEM attributes for UC3....41
Annex A (informative) Example of a 2-rate TOU tariff....44
A.1 DLMS/COSEM model of a 2-rate TOU tariff example....44
A.2 DLMS/COSEM model example of load management by demand limits....46
Bibliography....47

Figure 1 – General reference architecture....9
Figure 2 – Generic use case....10
Figure 3 – UC1: ReadMeterOnSchedule....11
Figure 4 – UC2: ReadMeterOnDemand....12
Figure 5 – UC3: ConfigureTariffRemotely....13
Figure 6 – UC4: DisconnectReconnectRemotely....14

AVA Documents
Document Sharing Hub
Full document details: PD IEC/TS 62056-6-9:2016

Figure 7 – UC5: ManageLoadByRelayControl 15
Figure 8 – UC6: ReportOnQualityOfSupply 16
Figure 9 – UC7: ManageLoadByDemandLimits 17
Figure 10 – UC8: SynchronizeClock 18
Figure 11 – UC9: ChangeFirmware 19
Figure 12 – UC10: RegisterMeter 20
Figure 13 – UC11: SuperviseMeter 21
Figure A.1 – DLMS/COSEM model of a 2-rate TOU tariff example 45
Figure A.2 – DLMS/COSEM model example of load management by demand limits 46

Table 1 – UC10 RegisterMeter 20
Table 2 – CIM verb mapping to DLMS/COSEM service 22
Table 3 – CIM noun mapping to DLMS/COSEM service parameters 22
Table 4 – CIM data type mapping to DLMS/COSEM service parameters 23
Table 5 – OBIS value group C code mapped to CIM ReadingType enumerated attribute values 24
Table 6 – OBIS values mapped to CIM ReadingType enumerated codes 28
Table 7 – OBIS code mapped to CIM EndDeviceControlType enumerated code 40
Table 8 – OBIS code mapped to CIM EndDeviceEventType enumerated code for UC8, UC9 and UC11 41
Table 9 – PricingStructureConfig mapped to DLMS/COSEM attributes for UC3 42

Documents
Document Sharing Hub
Full document details: PD IEC/TS 62056-6-9:2016

INTERNATIONAL ELECTROTECHNICAL COMMISSION

ELECTRICITY METERING DATA EXCHANGE – THE DLMS/COSEM SUITE –

Part 6-9: Mapping between the Common Information Model message profiles (IEC 61968-9) and DLMS/COSEM (IEC 62056) data models and protocols

FOREWORD

1) The International Electrotechnical Commission (IEC) is a worldwide organization for standardization comprising all national electrotechnical committees (IEC National Committees). The object of IEC is to promote international co-operation on all questions concerning standardization in the electrical and electronic fields. To this end and in addition to other activities, IEC publishes International Standards, Technical Specifications, Technical Reports, Publicly Available Specifications (PAS) and Guides (hereafter referred to as "IEC Publication(s)"). Their preparation is entrusted to technical committees; any IEC National Committee interested in the subject dealt with may participate in this preparatory work. International, governmental and non-governmental organizations liaising with the IEC also participate in this preparation. IEC collaborates closely with the International Organization for Standardization (ISO) in accordance with conditions determined by agreement between the two organizations.
2) The formal decisions or agreements of IEC on technical matters express, as nearly as possible, an international consensus of opinion on the relevant subjects since each technical committee has representation from all interested IEC National Committees.
3) IEC Publications have the form of recommendations for international use and are accepted by IEC National Committees in that sense. While all reasonable efforts are made to ensure that the technical content of IEC Publications is accurate, IEC cannot be held responsible for the way in which they are used or for any misinterpretation by any end user.
4) In order to promote international uniformity, IEC National Committees undertake to apply IEC Publications transparently to the maximum extent possible in their national and regional publications. Any divergence between any IEC Publication and the corresponding national or regional publication shall be clearly indicated in the latter.
5) IEC itself does not provide any attestation of conformity. Independent certification bodies provide conformity assessment services and, in some areas, access to IEC marks of conformity. IEC is not responsible for any services carried out by independent certification bodies.
6) All users should ensure that they have the latest edition of this publication.
7) No liability shall attach to IEC or its directors, employees, servants or agents including individual experts and members of its technical committees and IEC National Committees for any personal injury, property damage or other damage of any nature whatsoever, whether direct or indirect, or for costs (including legal fees) and expenses arising out of the publication, use of, or reliance upon, this IEC Publication or any other IEC Publications.
8) Attention is drawn to the Normative references cited in this publication. Use of the referenced publications is indispensable for the correct application of this publication.
9) Attention is drawn to the possibility that some of the elements of this IEC Publication may be the subject of patent rights. IEC shall not be held responsible for identifying any or all such patent rights.

The main task of IEC technical committees is to prepare International Standards. In exceptional circumstances, a technical committee may propose the publication of a technical specification when

- the required support cannot be obtained for the publication of an International Standard, despite repeated efforts, or
- the subject is still under technical development or where, for any other reason, there is the future but no immediate possibility of an agreement on an International Standard.

Technical specifications are subject to review within three years of publication to decide whether they can be transformed into International Standards.

Technical specifications are subject to review within three years of publication to decide whether they can be transformed into International Standards.

AVA Documents
Document Sharing Hub

IEC TS 62056-6-9, which is a technical specification, has been prepared by IEC technical committee 13: Electrical energy measurement and control:

The text of this technical specification is based on the following documents:

Enquiry draft	Report on voting
13/1647A/DTS	13/1672/RVC

Full information on the voting for the approval of this technical specification can be found in the report on voting indicated in the above table.

A list of all parts in the IEC 62056 series, published under the general title *Electricity metering data exchange – The DLSM/COSEM suite*, can be found on the IEC website.

This publication has been drafted in accordance with the ISO/IEC Directives, Part 2.

The committee has decided that the contents of this publication will remain unchanged until the stability date indicated on the IEC website under "http://webstore.iec.ch" in the data related to the specific publication. At this date, the publication will be

- transformed into an International standard,
- reconfirmed,
- withdrawn,
- replaced by a revised edition, or
- amended.

A bilingual version of this publication may be issued at a later date.

IMPORTANT – The 'colour inside' logo on the cover page of this publication indicates that it contains colours which are considered to be useful for the correct understanding of its contents. Users should therefore print this document using a colour printer.

Documents
Document Sharing Hub

Full document details: PD IEC/TS 62056-6-9:2016

INTRODUCTION

Smart grid, smart metering systems and advanced metering infrastructure are being developed and deployed worldwide in order to improve energy efficiency, better management of network assets, integrating distributed energy generation, involving customers in demand response and facilitating the operation of the deregulated energy market. Smart metering systems constitute an integral part of the smart grid. Therefore, it is important that a smooth and secure communication can be realized between ERP systems and metering end points.

IEC TC 57 develops CIM-based data models and protocols for information exchange for use in ERP integration and smart grid applications. In particular IEC 61968-9 deals with meter reading and control message profiles.

IEC TC 13 develops data models and protocols for information exchange for electrical energy measurement, and control equipment incorporating head end systems, end devices and intermediate data concentrator devices. In particular, the IEC 62056 series deals with the DLMS/COSEM data models and protocol suite.

This Technical Specification deals with the mapping between the CIM message profiles (IEC 61968-9) and DLMS/COSEM data models and protocols (IEC 62056).

In the following it is assumed that the mapping between CIM and DLMS/COSEM is performed in the metering HES. In the case where end-to-end security is established between a 3rd party CIM-based system and a DLMS/COSEM server, the mapping is performed in the 3rd party system.

Documents
Document Sharing Hub
Full document details: PD IEC/TS 62056-6-9:2016

ELECTRICITY METERING DATA EXCHANGE – THE DLMS/COSEM SUITE –

Part 6-9: Mapping between the Common Information Model message profiles (IEC 61968-9) and DLMS/COSEM (IEC 62056) data models and protocols

1 Scope

This part of IEC 62056, which is a Technical Specification, describes how in the utility environment an ERP system or a third party system can exchange information with a metering system. In particular, this Technical Specification covers the mapping between information interchange messages of a CIM-based ERP or third party system and a DLMS/COSEM-based metering system.

A typical metering system would comprise a HES and end devices such as meters as well as tariff and load control devices. There may be intermediate devices in the metering system such as NNAPs and LNAPs, as described in the smart metering architecture of IEC 62056-1-0. These intermediate devices are outside of the scope of this Technical Specification.

CIM ReadingType, EndDeviceControlType and EndDeviceEventType codes as specified in IEC 61968-9 are mapped to OBIS codes as specified in IEC 62056-6-1.

In some cases the CIM models and COSEM models are differently structured, in which case it is not possible to provide a one-to-one mapping between the OBIS codes and the CIM data type codes. In these cases the mapping is thus performed between the CIM UML object attributes and the COSEM object attributes (see 4.3.4 UC3).

CIM EndDeviceControlType codes as specified in IEC 61968-9 are mapped to COSEM IC attributes and methods as specified in IEC 62056-6-2.

CIM verbs and nouns as specified in IEC 61968-9 are mapped to DLMS service requests and responses as specified in IEC 62056-5-3.

Only the most commonly used UCs are given in order to illustrate possible applications. Extensions may be considered in future editions.

2 Normative references

The following documents, in whole or in part, are normatively referenced in this document and are indispensable for its application. For dated references, only the edition cited applies. For undated references, the latest edition of the referenced document (including any amendments) applies.

IEC 60050-300, *International Electrotechnical Vocabulary (IEV) – Electrical and electronic measurements and measuring instruments – Part 311: General terms relating to measurements – Part 312: General terms relating to electrical measurements – Part 313: Types of electrical measuring instruments – Part 314: Specific terms according to the type of instrument*

IEC 61968-9:2013, *Application integration at electric utilities – System interfaces for distribution management – Part 9: Interface for meter reading and control*

AVA Documents
Document Sharing Hub

Full document details: PD IEC/TS 62056-6-9:2016

IEC 61968-100:2013, *Application integration at electric utilities – System interfaces for distribution management – Part 100: Implementation profiles*

IEC 62056-5-3:2016, *Electricity metering data exchange – The DLMS/COSEM suite – Part 5-3: DLMS/COSEM application layer*

IEC 62056-6-1:2015, *Electricity metering data exchange - The DLMS/COSEM suite - Part 6-1: Object Identification System (OBIS)*

IEC 62056-6-2:2016, *Electricity metering data exchange - The DLMS/COSEM suite - Part 6-2: COSEM interface classes*

3 Terms, definitions and abbreviations

3.1 Terms and definitions

For the purposes of this document, the terms and definitions given in IEC 60050-300, IEC 61968-100, IEC 61968-9, IEC 62056-5-3, IEC 62056-6-1and IEC 62056-6-2 apply.

3.2 Abbreviations

AMI	Advanced Metering Infrastructure
CIM	Common Information Model
CIS	Customer Information System
COSEM	Companion Specification for Energy Metering
DLMS	Device Language Message Specification
ERP	Enterprise Resource Planning
HES	Head End System
IC	Interface Class
LNAP	Local Network Access Point
NNAP	Neighborhood Network Access Point
OBIS	OBject Identification System
QOS	Quality Of Supply
RCD	Remote Connect/Disconnect Switch
TOU	Time Of Use
UC	Use Case

3.3 Notation and terminology

Throughout this Technical Specification the following rules are observed regarding the naming of terms:

- the so-called “camel-notation” is preserved when terms are referenced to the CIM standards as prepared by IEC TC 57;
- similarly, capitalization combined with “under_score” joining is preserved when terms are referenced to the DLMS/COSEM standards as prepared by IEC TC 13;
- names of use cases start with a verb to indicate that the use case "does" something and is then concatenated in camel notation with descriptive text to indicate what is done;
- the expression DLMS/COSEM is used to emphasize the fact that the COSEM data model specified in IEC 62056-6-2 and the DLMS/COSEM application layer specified in IEC 62056-5-3 are closely linked.

Documents
Document Sharing Hub
Full document details: PD IEC/TS 62056-6-9:2016

4 Reference environment

4.1 General reference architecture

Figure 1 shows a generalized architecture for ERP and/or 3rd party systems exchanging information with metering head-end systems using CIM-based IEC 61968-9 message profiles, where metering head-end systems exchange information with end devices using the DLMS/COSEM IEC 62056 data models and protocols.

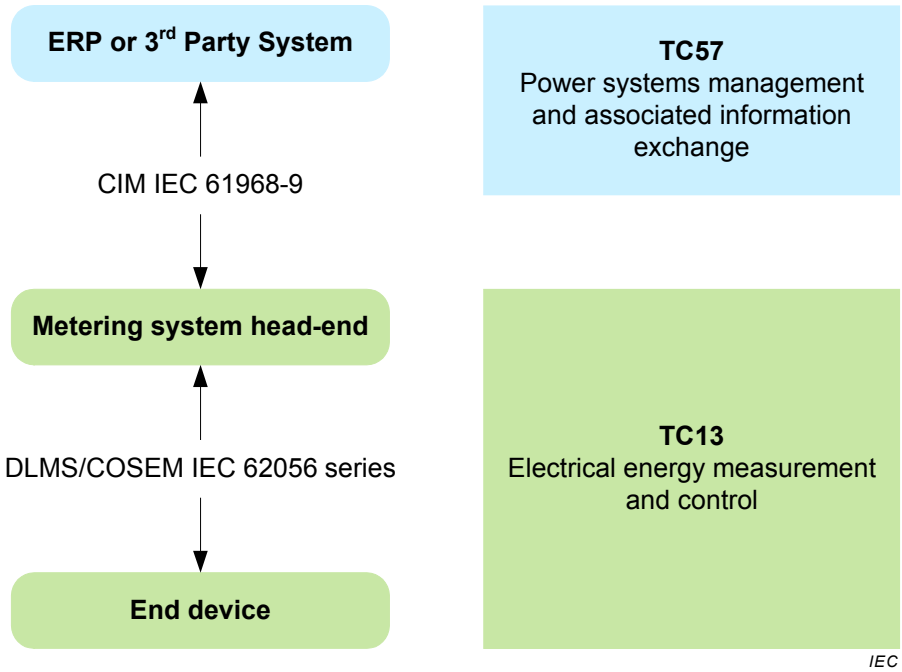

Figure 1 – General reference architecture

IEC TC 57 deals with the CIM-based message profiles and TC 13 deals with the DLMS/COSEM data models and protocols. Generally the translation between the two domains takes place at the HES. In the case where end-to-end security is established between a 3rd party CIM-based system and a DLMS/COSEM server, the mapping is performed in the 3rd party system.

The reference UCs that follow refer to the architecture shown in Figure 1 where CIM_System is located in the ERP or 3rd party system, CIM_DLMS/COSEM_Translator is located in the metering system head-end and DLMS/COSEM_Server is located in the end device.

Documents
Document Sharing Hub
Full document details: PD IEC/TS 62056-6-9:2016

4.2 Reference use cases – Generalized use case

Figure 2 shows a generic 3-party architecture allowing a sequence of message exchanges between the 3 parties.

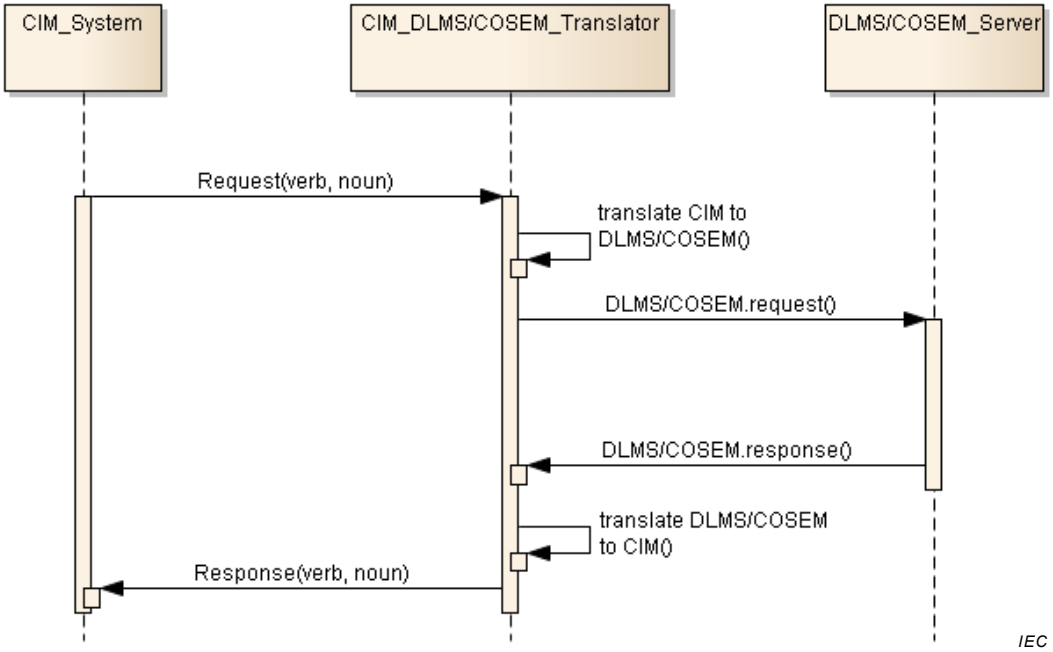

Figure 2 – Generic use case

CIM_System is any CIM-aware system (generally an enterprise system) that requires exchanging information with an end device (generally a meter) that is able to perform the role of a DLMS/COSEM server.

DLMS/COSEM_Server is a pseudonym for a DLMS/COSEM server.

CIM_System has to communicate via a proxy CIM_DLMS/COSEM_Translator, which may be any device, equipment or software that is able to perform the role of a DLMS/COSEM client.

A CIM-based request message originates at CIM_System and is received at CIM_DLMS/COSEM_Translator where the translation to a DLMS/COSEM service_request message takes place. The translated message reaches DLMS/COSEM_Server where the request is appropriately executed. A DLMS/COSEM response message is returned to CIM_DLMS/COSEM_Translator where it is translated into a CIM-based response message and sent back to CIM_System to complete the sequence.

In the case where end-to-end security is established between a 3rd party CIM-based system and a DLMS/COSEM server, CIM_DLMS/COSEM_Translator is located in the 3rd party system.

The constructs “Request(verb,noun)” and “Response(verb,noun)” are defined in IEC 61968-100:2013, Clause 4.

The constructs “DLMS/COSEM.request()” and “DLMS/COSEM.response()” are defined in IEC 62056-5-3:2016, Clause 6.

Documents
Document Sharing Hub
Full document details: PD IEC/TS 62056-6-9:2016

4.3 Use case examples

4.3.1 General

The following UCs serve as examples to illustrate the mapping of the messages. The set of UCs is by no means exhaustive.

4.3.2 UC1: ReadMeterOnSchedule

Figure 3 shows a sequence of message exchanges for UC1.

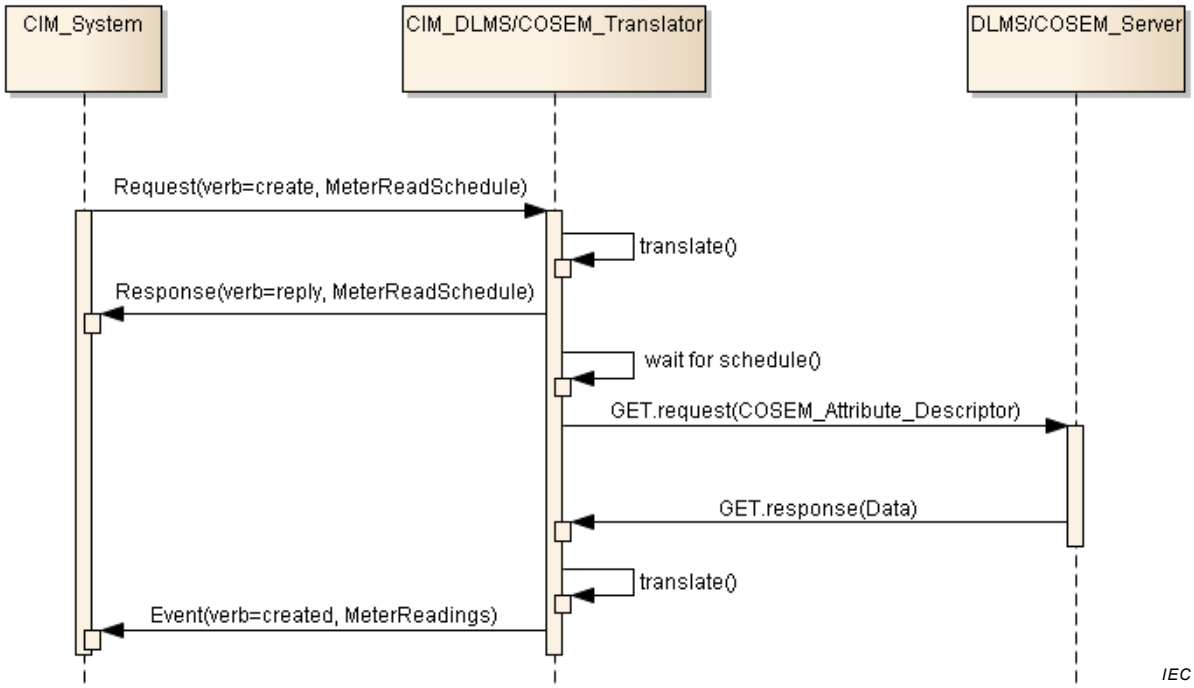

Figure 3 – UC1: ReadMeterOnSchedule

The CIS requests meter readings scheduled according to a time table. The CIS compiles the schedule and sends it to the AMI HES where the schedule is loaded. The HES may then acknowledge that the request has been appropriately loaded and is ready for execution. Once the schedule is activated, the HES obtains meter readings as scheduled from the meters specified and publishes the readings to the CIS. This continues until the schedule is inactivated or a new schedule is loaded.

Alternatively it is also possible to load the schedule directly into the meter and then utilize the DLMS/COSEM push mechanism that uses the DataNotification service instead of the GET.request / GET.response services.

In both cases the CIM message constructs with verbs and nouns remain the same as given in Figure 3.

The CIM message nouns MeterReadingSchedule and MeterReadings are used in this UC.

See IEC 61968-9:2013, 5.3 for detailed message constructs of MeterReadingSchedule and MeterReadings.

See 5.5 for OBIS code mapping to ReadingType code.

Documents
Document Sharing Hub
Full document details: PD IEC/TS 62056-6-9:2016

4.3.3 UC2: ReadMeterOnDemand

Figure 4 shows a sequence of message exchanges for UC2.

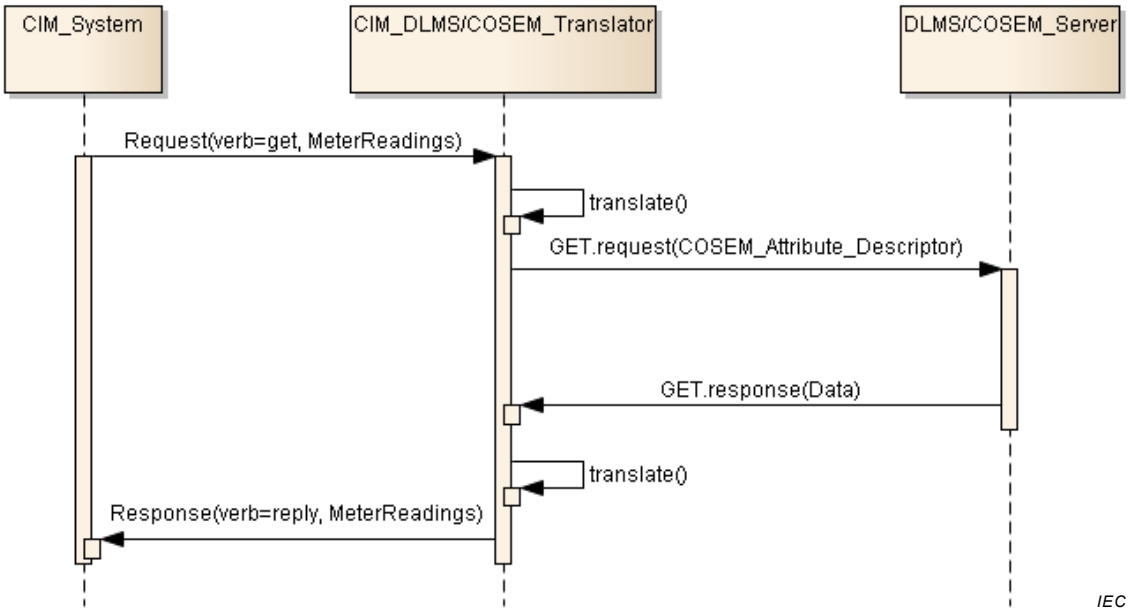

Figure 4 – UC2: ReadMeterOnDemand

A utility customer contacts the supplier in order to check that the current meter reading on his bill corresponds to the actual reading. Similarly, a customer switches to a new supplier and the old supplier requests a meter reading in order to send the closing bill. The CIS sends a request message to the AMI HES requesting a real-time reading from the particular meter. The HES connects with the meter and obtains a real-time reading, which is returned to the CIS for further evaluation of the customer query.

The CIM message noun MeterReadings is used in this example (the detailed message construct of MeterReadings can be found in IEC 61968-9:2013, 5.3). The mapping of the OBIS code to the ReadingType code is described in 5.5.

Documents
Document Sharing Hub
Full document details: PD IEC/TS 62056-6-9:2016

4.3.4 UC3: ConfigureTariffRemotely

Figure 5 shows a sequence of message exchanges for UC3.

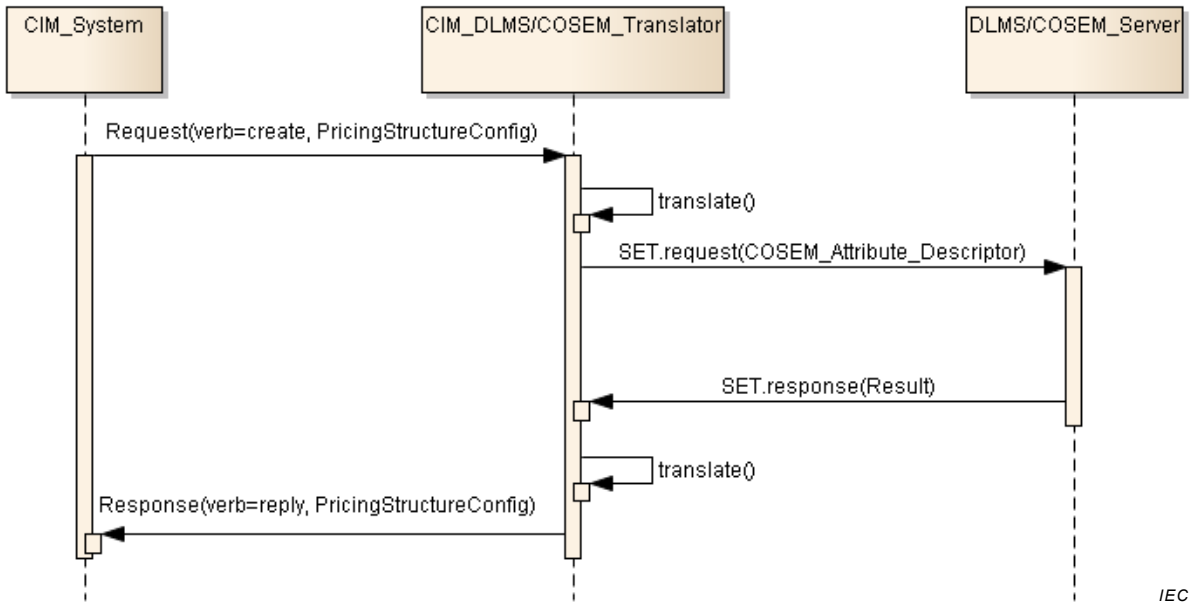

Figure 5 – UC3: ConfigureTariffRemotely

A customer changes its supply contact. As a consequence, the tariffication parameters in the meter shall be changed. The CIS sends the new tariff information to the AMI HES using the appropriate CIM message. The translator extracts the relevant tariff information, assembles the corresponding DLMS/COSEM message and sends it to the DLMS/COSEM server (meter). The meter configures the new tariff structure. An appropriate DLMS/COSEM response is returned from the meter to the HES which is then translated into a CIM message and passed back to the CIS as a response to the original request.

The CIM message noun PricingStructureConfig is used in this example (see IEC 61968-9:2013, 5.10.2.11 and 5.10.3.14 for the detailed message construct of PricingStructureConfig).

Due to the fact that the tariffication models in CIM and in DLMS/COSEM are differently structured, it is not possible to provide a one-to-one mapping of the OBIS codes to the CIM data type codes. An example of a tariffication scheme realized by means of COSEM objects is shown in Clause A.1. Those attributes of the COSEM objects which can be mapped to the CIM UML attributes of the PricingStructureConfig message profile are given in 5.8. The management of those attributes that cannot be mapped in this way is outside the scope of this Technical Specification.

Documents
Document Sharing Hub
Full document details: PD IEC/TS 62056-6-9:2016

4.3.5 UC4: DisconnectReconnectRemotely

Figure 6 shows a sequence of message exchanges for UC4.

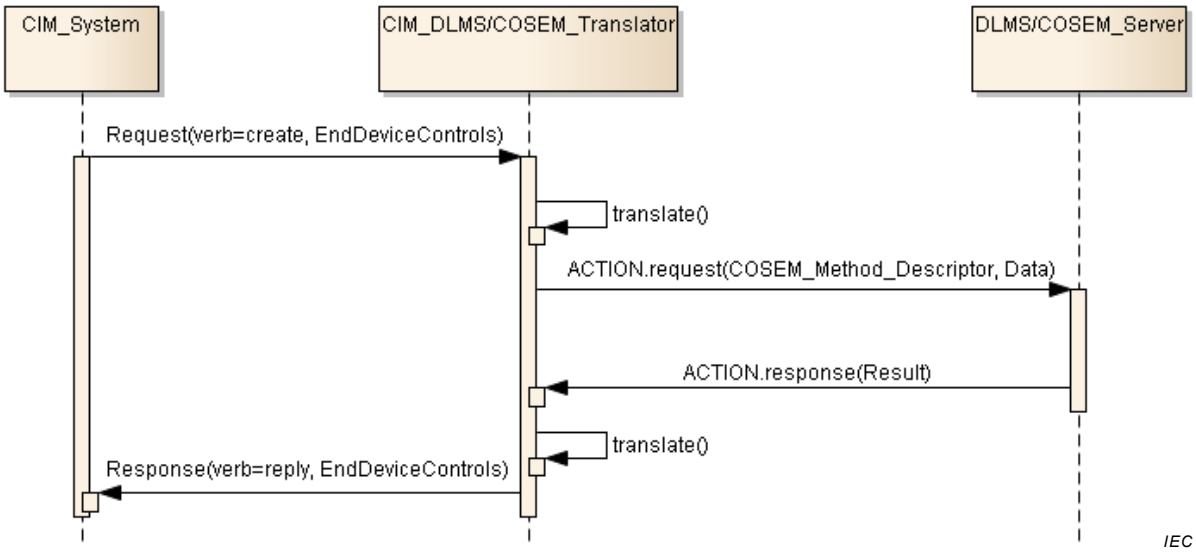

Figure 6 – UC4: DisconnectReconnectRemotely

A customer terminates his supply agreement with the utility. As a consequence of the termination the utility disconnects the service supply to the customer's premises. When the CIS receives the termination instruction, a request to disconnect the service is sent to the HES which sends the instruction on to the specified meter. The meter disconnects the service supply to the premises by means of a switch.

Conversely, a customer may enter into a new supply agreement with the utility, in which case the service supply is reconnected.

The CIM message noun EndDeviceControls and the DLMS/COSEM Disconnect control IC are used in this example. The detailed message construct of EndDeviceControls in the context of load control is given in IEC 61968-9:2013, 5.4 and the detailed rules governing the operation of the Disconnect control IC are given in IEC 62056-6-2:2016, 5.4.8.

The mapping of OBIS codes, attributes and methods to EndDeviceControlType codes is given in 5.6.

Documents
Document Sharing Hub
Full document details: PD IEC/TS 62056-6-9:2016