PD IEC/TS 62257-9-1:2016

BSI Standards Publication

Recommendations for renewable energy and hybrid systems for rural electrification

Part 9-1: Integrated systems — Micropower systems

Documents
Document Sharing Hub

Full document details: PD IEC/TS 62257-9-1:2016

National foreword

This Published Document is the UK implementation of IEC/TS 62257-9-1:2016. It supersedes DD IEC/TS 62257-9-1:2008 which is withdrawn.

The UK participation in its preparation was entrusted to Technical Committee GEL/82, Photovoltaic Energy Systems.

A list of organizations represented on this committee can be obtained on request to its secretary.

This publication does not purport to include all the necessary provisions of a contract. Users are responsible for its correct application.

© The British Standards Institution 2016.
Published by BSI Standards Limited 2016

ISBN 978 0 580 91979 4
ICS 27.160; 27.180

Compliance with a British Standard cannot confer immunity from legal obligations.

This Published Document was published under the authority of the Standards Policy and Strategy Committee on 31 October 2016.

Amendments/corrigenda issued since publication

Date	Text affected

Documents
Document Sharing Hub

Full document details: PD IEC/TS 62257-9-1:2016

IEC TS 62257-9-1

Edition 2.0 2016-09

TECHNICAL SPECIFICATION

colour inside

Recommendations for renewable energy and hybrid systems for rural electrification –
Part 9-1: Integrated systems – Micropower systems

INTERNATIONAL
ELECTROTECHNICAL
COMMISSION

ICS 27.160

ISBN 978-2-8322-3585-0

Warning! Make sure that you obtained this publication from an authorized distributor.

® Registered trademark of the International Electrotechnical Commission

Documents
Document Sharing Hub

Full document details: PD IEC/TS 62257-9-1:2016

CONTENTS

FOREWORD 5
INTRODUCTION 7
1 Scope 8
2 Normative references 9
3 Terms and definitions 9
4 General 11
4.1 Boundary of a micropower plant 11
4.2 Composition of a micropower plant 12
4.3 General functional layout of a micropower plant 12
5 Design 13
5.1 Design criteria 13
5.2 Power generation mix 14
5.2.1 General 14
5.2.2 Internal combustion generator sets 15
5.3 Electrical design 15
5.3.1 System voltage selection 15
5.3.2 Interconnection of generators 16
5.4 Mechanical and civil works 16
5.4.1 Civil works 16
5.4.2 Technical room 16
5.4.3 Battery room 17
5.4.4 Specific requirements 17
6 Safety issues 17
6.1 Electrical issues 17
6.1.1 General 17
6.1.2 Specific requirements 17
6.2 Mechanical issues 21
6.3 Thermal and fire issues 21
6.4 Noise issues 21
6.5 Access security 22
7 Erection of equipment 22
7.1 Siting 22
7.1.1 Photovoltaic array 22
7.1.2 Wind turbine 22
7.1.3 Micro-hydro turbine 22
7.1.4 Generator set 23
7.1.5 Technical room 23
7.1.6 Battery bank (battery enclosure) 23
7.2 Equipment installation 24
7.2.1 Mechanical 24
7.2.2 Electrical 24
8 Acceptance process 27
8.1 General 27
8.2 Phase 1: Preparation 27
8.3 Phase 2: Documentation 27

AVA Documents
Document Sharing Hub
Full document details: PD IEC/TS 62257-9-1:2016

8.4 Phase 3: Commissioning 27
8.4.1 Step 1: Evaluation of the conformity of the installed system with the accepted design 27
8.4.2 Step 2: Evaluation of qualification of the installation 27
8.4.3 Step 3: Preliminary tests 27
8.4.4 Step 4: Performance testing 28
8.5 Phase 4: Agreement 29
8.6 Commissioning records 29
9 Operation, maintenance and replacement 29
10 Marking and documentation 29
10.1 Marking 29
10.1.1 Information for emergency services 29
10.1.2 Information for maintenance 29
10.1.3 Information for batteries 30
10.1.4 Signs 30
10.2 Documentation 30
Annex A (informative) Selectivity of protection 32
Annex B (informative) Risk assessment of lightning stroke 34
B.1 General 34
B.2 Risk assessment simplified methodology 34
B.3 Risk assessment multi-criteria methodology 34
Annex C (normative) Voltage domains 37
Annex D (informative) Battery room 38
D.1 Administrative formalities 38
D.2 Battery siting 38
D.3 Characteristics of the battery storage site: specific battery room or locker 38
D.4 Electrical equipment 39
D.5 Safety instructions 40
D.6 Battery enclosure examples (informative) 40
Annex E (informative) Energy fraction calculations 45
Annex F (informative) Noise control 46
F.1 General 46
F.2 Assessment of noise annoyance 46
F.3 Principles of noise attenuation 46
F.4 Noise reduction methods for specific items of equipment 47
F.4.1 Generator sets 47
F.4.2 Wind turbines 47
F.4.3 Inverters and other electronic equipment 47
Annex G (informative) Commissioning record sheet (examples) 48
Bibliography 59

Figure 1 – Micropower system limits 12
Figure 2 – Example of functional layout for a micropower plant supplying a.c. energy 13
Figure 3 – Interconnection configuration with d.c. bus and a.c. bus 16
Figure 4 – Interconnection configuration with a.c. bus only 16
Figure 5 – Example of protection against effects of lightning and over-voltage for generators with two live conductors output (d.c. or a.c.) TNS P+N 18

AVA Documents
Document Sharing Hub
Full document details: PD IEC/TS 62257-9-1:2016

Figure 6 – Example of protection against effects of lightning over-voltage for three phase generators with four live a.c. conductors (TNS P+N scheme) – Generator side.....19
Figure 7 – Example of a simplified lightning protection including a crow's foot earth termination 19
Figure 8 – Protection of a photovoltaic array.....20
Figure 9 – Wiring arrangement for equipotential link 21
Figure A.1 – Example of the selectivity of protection 33
Figure D.1 – Two examples of a battery installed in a dedicated equipment room showing clearances from equipment.....41
Figure D.2 – Example of a battery enclosure within a room where the battery enclosure is vented to outside the building 42
Figure D.3 – Example of a battery enclosure with equipment enclosure immediately adjacent 43
Figure D.4 – Example of a battery enclosure with the intake and outlet vents on the same wall 44

Table 1 – Minimum dimensions for lightning protection wires 20
Table 2 – Cross-section of 230 V a.c. power cables.....25
Table 3 – Fuse ratings for protection from short-circuiting in 230 V/400 V a.c. circuits 26
Table 4 – Fuse ratings for protection from short-circuiting in 120 V/208 V a.c. circuits 26
Table 5 – Circuit-breaker ratings for protection from short-circuiting.....26
Table B.1 – Stake index values 34
Table B.2 – Construction index values.....35
Table B.3 – Height index values 35
Table B.4 – Situation index values 35
Table B.5 – Lightning prevalence index values 35
Table B.6 – Assessment of risk and need for protection 36
Table C.1 – Voltage domains 37

Documents
Document Sharing Hub
Full document details: PD IEC/TS 62257-9-1:2016

INTERNATIONAL ELECTROTECHNICAL COMMISSION

RECOMMENDATIONS FOR RENEWABLE ENERGY AND HYBRID SYSTEMS FOR RURAL ELECTRIFICATION –

Part 9-1: Integrated systems – Micropower systems

FOREWORD

1) The International Electrotechnical Commission (IEC) is a worldwide organization for standardization comprising all national electrotechnical committees (IEC National Committees). The object of IEC is to promote international co-operation on all questions concerning standardization in the electrical and electronic fields. To this end and in addition to other activities, IEC publishes International Standards, Technical Specifications, Technical Reports, Publicly Available Specifications (PAS) and Guides (hereafter referred to as "IEC Publication(s)"). Their preparation is entrusted to technical committees; any IEC National Committee interested in the subject dealt with may participate in this preparatory work. International, governmental and non-governmental organizations liaising with the IEC also participate in this preparation. IEC collaborates closely with the International Organization for Standardization (ISO) in accordance with conditions determined by agreement between the two organizations.
2) The formal decisions or agreements of IEC on technical matters express, as nearly as possible, an international consensus of opinion on the relevant subjects since each technical committee has representation from all interested IEC National Committees.
3) IEC Publications have the form of recommendations for international use and are accepted by IEC National Committees in that sense. While all reasonable efforts are made to ensure that the technical content of IEC Publications is accurate, IEC cannot be held responsible for the way in which they are used or for any misinterpretation by any end user.
4) In order to promote international uniformity, IEC National Committees undertake to apply IEC Publications transparently to the maximum extent possible in their national and regional publications. Any divergence between any IEC Publication and the corresponding national or regional publication shall be clearly indicated in the latter.
5) IEC itself does not provide any attestation of conformity. Independent certification bodies provide conformity assessment services and, in some areas, access to IEC marks of conformity. IEC is not responsible for any services carried out by independent certification bodies.
6) All users should ensure that they have the latest edition of this publication.
7) No liability shall attach to IEC or its directors, employees, servants or agents including individual experts and members of its technical committees and IEC National Committees for any personal injury, property damage or other damage of any nature whatsoever, whether direct or indirect, or for costs (including legal fees) and expenses arising out of the publication, use of, or reliance upon, this IEC Publication or any other IEC Publications.
8) Attention is drawn to the Normative references cited in this publication. Use of the referenced publications is indispensable for the correct application of this publication.
9) Attention is drawn to the possibility that some of the elements of this IEC Publication may be the subject of patent rights. IEC shall not be held responsible for identifying any or all such patent rights.

The main task of IEC technical committees is to prepare International Standards. In exceptional circumstances, a technical committee may propose the publication of a technical specification when

- the required support cannot be obtained for the publication of an International Standard, despite repeated efforts, or
- the subject is still under technical development or where, for any other reason, there is the future but no immediate possibility of an agreement on an International Standard.

Technical specifications are subject to review within three years of publication to decide whether they can be transformed into International Standards.

IEC 62257-9-1, which is a technical specification, has been prepared by IEC technical committee 82: Solar photovoltaic energy systems.

This second edition cancels and replaces the first edition, issued in 2008. It constitutes a technical revision.

Documents
Document Sharing Hub

The main technical changes with regard to the previous edition are as follows:

- Changing the voltage range covered by the technical specification to a.c. nominal voltage below 1 000 V and d.c. nominal voltage below 1 500 V (introduction)
- Defining the rating of the microgrids to be the output of the microgrid (introduction)
- Including 240 V 1-Ø/415 V 3-Ø, in the voltage levels (introduction)
- Specifying Non-separated MPPTs connecting LV d.c. arrays to ELV d.c. battery banks are not allowed (5.3.1.1)
- Noting that systems can now include a.c. bus arrangements and use MPPT's as the solar controllers thus increasing the internal voltages that occur in systems (5.3.1.2)
- Increased equipotential bonding for lightning protection from minimum 10 mm^2 to minimum 16 mm^2 (6.1.2.2)
- Included a new subclause (7.1.6) on battery enclosures including possible arrangements shown as Clause D.6
- Rewritten LV Multiple sources (7.2.2.3.1)
- Included start-up procedure in documentation (10.2)

The text of this technical specification is based on the following documents:

Enquiry draft	Report on voting
82/1028/DTS	82/1087/RVC

Full information on the voting for the approval of this technical specification can be found in the report on voting indicated in the above table.

This document has been drafted in accordance with the ISO/IEC Directives, Part 2.

This technical specification is to be used in conjunction with the IEC 62257 series and with future parts of this series as and when they are published.

A list of all parts in the IEC 62257 series, published under the general title *Recommendations for renewable energy and hybrid systems for rural electrification*, can be found on the IEC website.

Future standards in this series will carry the new general title as cited above. Titles of existing standards in this series will be updated at the time of the next edition.

The committee has decided that the contents of this publication will remain unchanged until the stability date indicated on the IEC website under "http://webstore.iec.ch" in the data related to the specific publication. At this date, the publication will be

- transformed into an International standard,
- reconfirmed,
- withdrawn,
- replaced by a revised edition, or
- amended.

A bilingual version of this publication may be issued at a later date.

IMPORTANT – The 'colour inside' logo on the cover page of this publication indicates that it contains colours which are considered to be useful for the correct understanding of its contents. Users should therefore print this document using a colour printer.

Documents
Document Sharing Hub

Full document details: PD IEC/TS 62257-9-1:2016

INTRODUCTION

The IEC 62257 series of documents intends to provide to the different players involved in rural electrification projects (such as project implementers, project contractors, project supervisors, installers, etc.) documents for the setting-up of renewable energy and hybrid systems with a.c. nominal voltage below 1 000 V, and d.c. nominal voltage below 1 500 V.

These documents are recommendations:

- to choose the right system for the right place;
- to design the system;
- to operate and maintain the system.

These documents are focused only on rural electrification concentrating on, but not specific to, developing countries. They must not be considered as all-inclusive to rural electrification. The documents try to promote the use of renewable energies in rural electrification; they do not deal with clean mechanisms developments at this time (CO_2 emission, carbon credit, etc.). Further developments in this field could be introduced in future steps.

This consistent set of documents is best considered as a whole with different parts corresponding to items for safety, sustainability of systems and at the lowest life-cycle cost as possible. One of the main objectives is to provide the minimum sufficient requirements, relevant to the field of application, that is, small renewable energy and hybrid off-grid systems.

Documents
Document Sharing Hub
Full document details: PD IEC/TS 62257-9-1:2016

RECOMMENDATIONS FOR RENEWABLE ENERGY AND HYBRID SYSTEMS FOR RURAL ELECTRIFICATION –

Part 9-1: Integrated systems – Micropower systems

1 Scope

Decentralized Rural Electrification Systems (DRES) are designed to supply electric power for sites which are not connected to a large interconnected system, or a national grid, in order to meet basic needs.

The majority of these sites are:

- isolated dwellings;
- village houses;
- community services (public lighting, pumping, health centres, places of worship or cultural activities, administrative buildings, etc.);
- economic activities (workshops, micro-industry, etc.).

The DRESs fall into the following three categories:

- process electrification systems (for example, for pumping);
- individual electrification systems (IES) for single users;
- collective electrification systems (CES) for multiple users.

Process or individual electrification systems exclusively consist of two subsystems:

- an electric energy generation subsystem;
- the user's electrical installation.

Collective electrification systems, however, consist of three subsystems:

- an electric energy generation subsystem;
- a distribution subsystem, also called microgrid;
- user’s electrical installations including interface equipment between the installations and the microgrid.

This technical specification applies to a micropower plant which is the electric energy generation subsystem associated with a decentralized rural electrification system.

It provides general requirements for the design, erection and operation of micropower plants and general requirements to ensure the safety of persons and property.

The micropower plants covered by this specification are low-voltage a.c., three-phase or single-phase, with rated capacity less than, or equal to, 100 kVA. The rated capacity is at the electrical output of the micropower plant, that is, the upstream terminals of the main switch between the micropower plant and the microgrid. They do not include voltage transformation.

The voltage levels covered under this specification are:

- the 240 V 1-Ø/415 V 3-Ø, the 230 V 1-Ø/400 V 3-Ø, the 220 V 1-Ø/380 V 3-Ø, and the 120 V 1-Ø/208 V 3-Ø systems at 60 Hz or 50 Hz; or obeyed by local code.

Documents
Document Sharing Hub
Full document details: PD IEC/TS 62257-9-1:2016

- the ELV (less than 120 V) d.c. systems.

The requirements cover “centralized” micropower plants for application in:

- process electrification;
- individual electrification systems and collective electrification systems.

It does not apply to distributed generation on microgrids.

2 Normative references

The following documents are referred to in the text in such a way that some or all of their content constitutes requirements of this document. For dated references, only the edition cited applies. For undated references, the latest edition of the referenced document (including any amendments) applies.

IEC 60364 (all parts), *Low-voltage electrical installations*

IEC 60364-5-53:2001, *Electrical installations of buildings – Part 5-53: Selection and erection of electrical equipment – Isolation, switching and control*

IEC TS 62257-2:2015, *Recommendations for renewable energy and hybrid systems for rural electrification – Part 2: From requirements to a range of electrification systems*

IEC TS 62257-4:2015, *Recommendations for renewable energy and hybrid systems for rural electrification – Part 4: System selection and design*

IEC TS 62257-5:2015, *Recommendations for renewable energy and hybrid systems for rural electrification – Part 5: Protection against electrical hazards*

IEC TS 62257-6:2015, *Recommendations for renewable energy and hybrid systems for rural electrification – Part 6: Acceptance, operation, maintenance and replacement*

IEC TS 62257-7-1:2010, *Recommendations for small renewable energy and hybrid systems for rural electrification – Part 7-1: Generators – Photovoltaic generators*

IEC TS 62257-7-3:2008, *Recommendations for small renewable energy and hybrid systems for rural electrification – Part 7-3: Generator set – Selection of generator sets for rural electrification systems*

IEC TS 62257-9-2:2016, *Recommendations for renewable energy and hybrid systems for rural electrification – Part 9-2: Integrated systems – Microgrids*

IEC TS 62257-9-4:2016, *Recommendations for renewable energy and hybrid systems for rural electrification – Part 9-4: Integrated systems – User installation*

IEC 62548:2016, *Photovoltaic (PV) arrays – Design requirements*

3 Terms and definitions

For the purposes of this document, the following terms and definitions apply.

Documents
Document Sharing Hub
Full document details: PD IEC/TS 62257-9-1:2016

ISO and IEC maintain terminological databases for use in standardization at the following addresses:

- IEC Electropedia: available at http://www.electropedia.org/
- ISO Online browsing platform: available at http://www.iso.org/obp

3.1
generator set
equipment producing electricity from a fossil fuel; it consists basically of an internal combustion engine producing mechanical energy and a generator which converts the mechanical energy into electrical energy and mechanical transmission, support and assembly components

3.2
reference earth
reference ground (US)
conductive part of the earth, considered as conductive, the electric potential of which is conventionally taken as zero, being outside the zone of influence of any earthing arrangement

[SOURCE: IEC 60050-826:2004, 826-13-01]

3.3
skilled person
person with relevant education or experience to enable him/her

- to perceive risks and to avoid hazards which electrical, chemical or mechanical equipment may create;
- to perform or supervise correctly the required task

3.4
instructed person
person adequately advised or supervised by skilled persons to enable him/her

- to perceive risks and to avoid hazards which electrical, chemical or mechanical equipment may create;
- to perform correctly the required task

3.5
ordinary person
person who is neither a skilled person nor an instructed person

3.6
licenced person
person who is authorized to perform electrical work under the appropriate state or territory statutes and regulations

Note 1 to entry: Only skilled or instructed persons can be licenced.

3.7
microgrid
subsystem of a DRES intended for power distribution, the prefix “micro” being intended to express the low level of transmitting capacity

3.8
micropower plant
subsystem of a DRES for power generation, the prefix “micro” being intended to express the low power level generated

Documents
Document Sharing Hub
Full document details: PD IEC/TS 62257-9-1:2016

3.9
protective conductor
identification: PE
conductor provided for purposes of safety, for example protection against electric shock

[SOURCE: IEC 60050-826:2004, 826-13-22]

3.10
PEN conductor
conductor combining the functions of both a protective earthing conductor and a neutral conductor

[SOURCE: IEC 60050-826:2004, 826-13-25]

3.11
power line
overhead or underground line installed to convey electrical energy for any purpose other than communication

3.12
renewable energy
RE
energy generated from natural resources such as sunlight, wind, rain, waves, tides, geothermal heat (list not exhaustive), which are renewable (naturally replenished)

Note 1 to entry: Renewable energy technologies include solar power, wind power, hydroelectricity, micro hydro, biomass, biofuels (list not exhaustive).

3.13
selectivity of protection
ability of a protection to identify the faulty section and/or phase(s) of a power system

[SOURCE: IEC 60050-448: 1995, 448-11-06]

3.14
lightning arrester
surge diverter
surge arrester
device intended to protect the electrical apparatus from high transient overvoltages and to limit the duration and frequently the amplitude of the follow-on current

[SOURCE: IEC 60050-811: 1991, 811-31-09]

3.15
technical room
cabinet
room or cabinet in which are located devices and apparatus dedicated to inter-connection of the different generators, protection of the different circuits, monitoring and control of the micropower plant and interfacing with the application

4 General

4.1 Boundary of a micropower plant

The micropower plant is defined as illustrated in Figure 1.

Documents
Document Sharing Hub
Full document details: PD IEC/TS 62257-9-1:2016

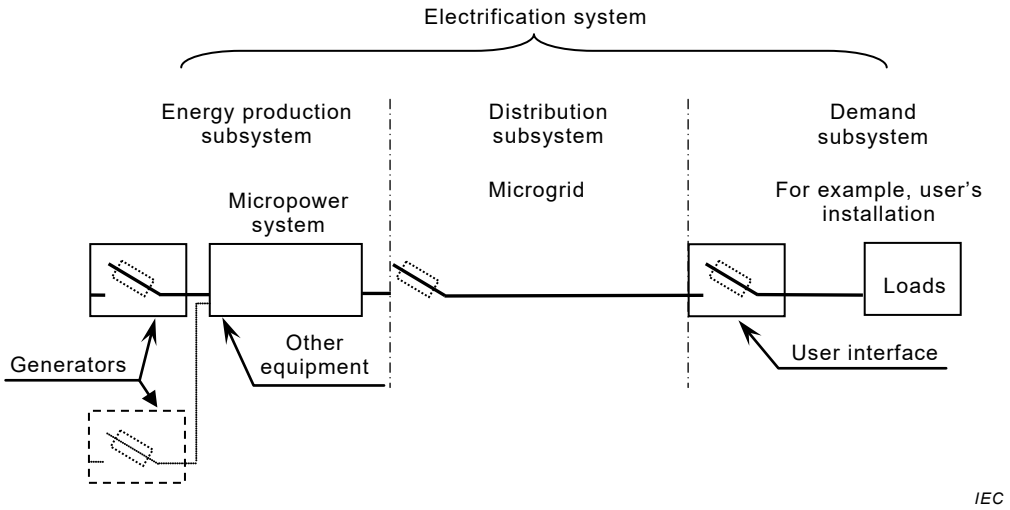

Figure 1 – Micropower system limits

The physical limits of the micropower plant are the upstream terminals of the main switch between the micropower plant and the microgrid.

4.2 Composition of a micropower plant

A micropower plant includes:

- one or several generators;
- storage devices (if needed) and associated charge controller;
- other equipment, such as
  - energy management device;
  - energy converter;
  - telecommunication equipment (if any);
  - main board;
  - interfaces:
    - between generators;
    - between the micropower plant and the microgrid or the application;
    - between the micropower plant and the operator;
  - switches;
  - protection devices;
- equipotential bonding;
- earthing system;
- civil works.

4.3 General functional layout of a micropower plant

Figure 2 illustrates an example of the general functional layout of a micropower plant combining the different equipment listed in 4.2.

Documents
Document Sharing Hub
Full document details: PD IEC/TS 62257-9-1:2016

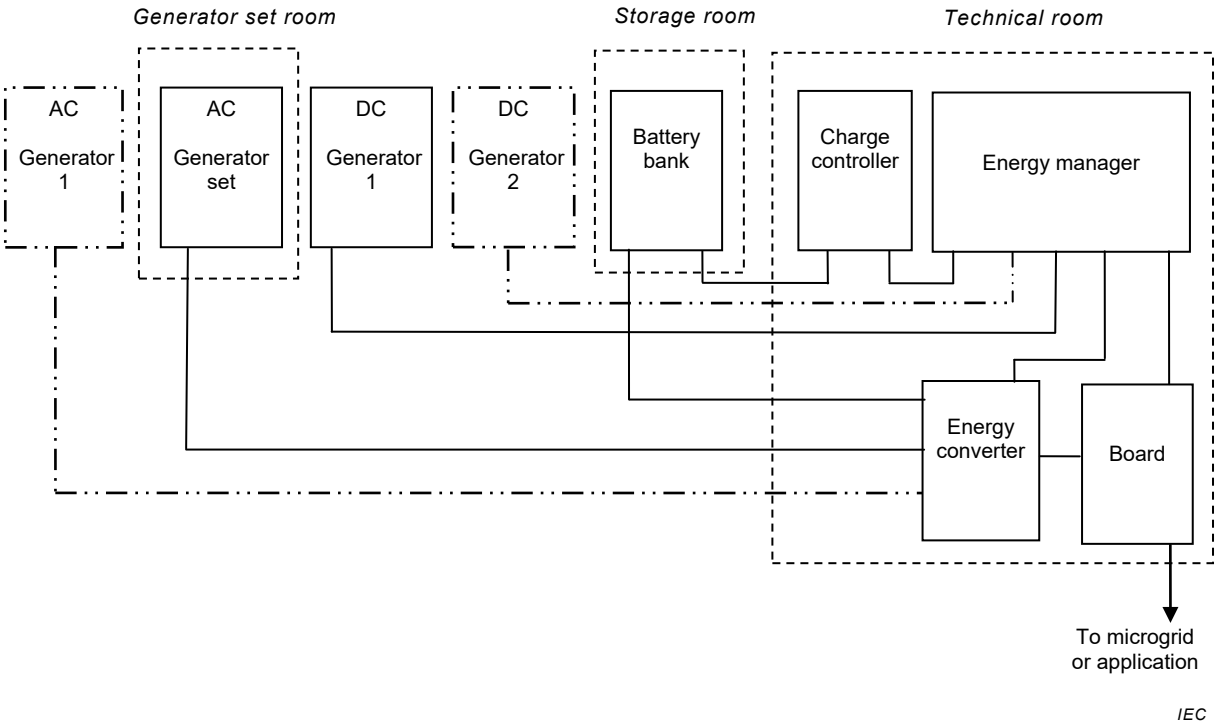

Figure 2 – Example of functional layout for a micropower plant supplying a.c. energy

5 Design

5.1 Design criteria

The design of any system should be guided by a number of criteria, determined by the project implementer (for example, user's affordable needs, lowest economic life-cycle cost, lowest environmental impact, site constraints). Some of the major areas to be considered are:

- average daily design d.c. load energy and average daily design a.c. load energy;
- maximum and surge power demand;
- system bus bar voltage and service (output) voltage;
- energy resources (sun, wind, hydro, fuel, biomass, etc.);
- budget constraints;
- power quality (for example, waveform quality or continuity of supply);
- environmental impact (for example, trimming or removal of trees for a PV system, civil works and diversion of water in a hydro system);
- use of existing equipment;
- acceptable extent of generator set running versus renewable energy contribution;
- acceptable noise levels;
- availability of spare parts and maintenance service;
- site accessibility;
- acceptable level of reliability and maintenance;
- level of automation versus direct user control;
- aesthetics.

The level of reliability should be determined in order to match the quality of service which is intended to be provided to the user in the general specification.

AVA Documents
Document Sharing Hub

NOTE The necessity for special design techniques to achieve very high levels of reliability will depend on the application and on the willingness to pay of customers for high quality of service.

The provision of electrical energy should be dealt with in the context of provision of all energy services to the dwelling or group of buildings. Such an integrated approach to the provision of energy services should yield the lowest cost outcome and can ensure lower overall energy consumption from non-renewable sources.

The design process performance specifications shall take into account the considerations above and shall be based on renewable energy resource data including adjustments for site conditions and design parameters (for example, PV array tilt angle and orientation, wind turbine tower height).

Major system parameters which shall be provided by the design process (for annual, seasonal or monthly periods, as appropriate to the basis of the design) are:

- load management strategies or conditions necessary for performance as specified;
- design d.c. load energy and design a.c. load energy;
- maximum and surge demand;
- average daily energy output of each renewable energy generator under design conditions;
- expected contribution to the load from each generator under design conditions, as a percentage;
- nominal generator set run time under design conditions;
- system voltage;
- ratings of major components.

5.2 Power generation mix

5.2.1 General

Energy sources to be used in the micropower plant should be chosen on the basis of:

- assessment of affordable energy needs (see IEC TS 62257-2);
- quality of service as defined in the general specification (see IEC TS 62257-2:2015, Annex C);
- capability of the different technologies to match the electrical needs, the affordable services cost and the user's preferences IEC TS 62257-2:2015, Annex D;
- local availability of energy sources (see IEC TS 62257-4);
- installed cost, maintenance costs and business plan of the project (see IEC TS 62257-4:2015, Annex D);
- local regulations or constraints regarding use of the resource or installation of the generator and associated equipment;
- aesthetic and environmental impacts.

The project implementer shall determine the proportion of power and energy to be provided by the different energy sources.

NOTE See also the calculations of renewable energy fraction in Annex E.

In selecting renewable energy generators, the following additional factors shall be taken into account:

- time and cost for obtaining reliable resource data;
- adequacy of the renewable resource based on measured or estimated data;

Documents
Document Sharing Hub
Full document details: PD IEC/TS 62257-9-1:2016

- where more than one renewable energy generator is used, the seasonal and short-term complementarity of the energy sources.

Recommendations for the use of small renewable energy generators are provided in IEC TS 62257-7.

The methodologies for assessing the renewable energy resources are provided in the specific documents dedicated to each generation technology (see IEC TS 62257-7-3).

5.2.2 Internal combustion generator sets

Selection should be based on consideration of the following additional factors:

- estimated monthly run time;
- fuel costs;
- use of the fuel on site for other purposes;
- noise levels emitted by the set, and required noise levels for the installation.

Recommendations for the use of generator sets are provided in IEC TS 62257-7-3.

5.3 Electrical design

5.3.1 System voltage selection

5.3.1.1 Output voltage

The power system shall be able to provide the following low-voltage a.c. levels for 60 Hz or 50 Hz systems, as specified in IEC TS 62257-9-2:

- 240 V 1-Ø / 415 V 3-Ø;
- 230 V 1-Ø / 400 V 3-Ø;
- 220 V 1-Ø / 380 V 3-Ø;
- 120 V 1-Ø / 208 V 3-Ø;
- or obeyed by local code

or ELV d.c. levels, especially 12 V or 24 V as specified in IEC TS 62257-9-4.

Non-separated MPPTs connecting LV d.c. arrays to ELV d.c. battery banks are not allowed.

5.3.1.2 Internal voltages

Voltages at the output of generators or components may be different from the voltages at the output of the power system.

The maximum levels of voltages shall be chosen in accordance with the maximum level of skill of the local operating staff. Levels of skill are defined in IEC TS 62257-6.

The different voltage domains and the operation rules are also defined in IEC TS 62257-6. If the local level skill is relatively low, it is recommended that the ELV domain be chosen.

Consideration should be given to the fact that many arrays are now using the a.c. bus configuration or using MPPTs where the array is LV d.c. and that appropriate additional training might be required to provided if the local skill level is low.

Documents
Document Sharing Hub
Full document details: PD IEC/TS 62257-9-1:2016

5.3.2 Interconnection of generators

Several cases may be considered depending on the type of energy sources and the type of application of equipment to be supplied. Where more than one generator is used, their outputs may be connected in common at an a.c. or a d.c. bus. The following Figure 3 and Figure 4 provide examples of generators interconnection schemes.

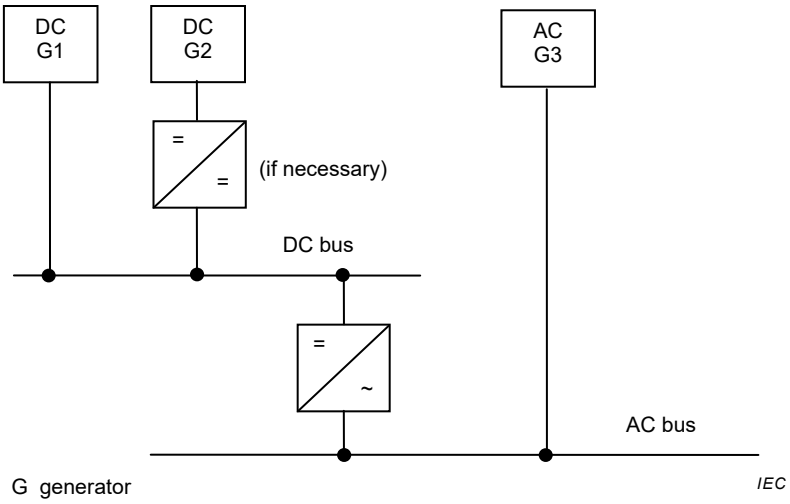

Figure 3 – Interconnection configuration with d.c. bus and a.c. bus

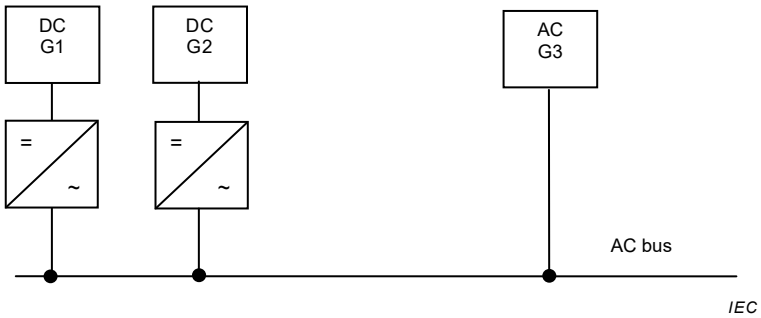

Figure 4 – Interconnection configuration with a.c. bus only

Examples of architectures of complete systems are provided in IEC TS 62257-2:2015, Annex E.

Attention shall be paid to the synchronization of a.c. generators which may be manual or automatic. Generally it is the most powerful and the longest running time a.c. generator which forms the grid and the other generators have to be synchronized with it when running.

5.4 Mechanical and civil works

5.4.1 Civil works

All structures shall be constructed to appropriate local statutory requirements and standards.

All civil works should be carried out in such a way as to minimize the environmental impacts, especially with regard to soil erosion and damage to vegetation.

5.4.2 Technical room

Some equipment, such as energy management device, charge controller, energy converter, main board, switches and protective devices as well as interconnection of the different circuits

AVA Documents
Document Sharing Hub
Full document details: PD IEC/TS 62257-9-1:2016

shall be installed in a technical room. For small systems, this technical room may be a cabinet.

This technical room shall be designed and installed in accordance with the requirements of IEC TS 62257-5 and IEC TS 62257-6.

5.4.3 Battery room

Special requirements for the battery room are given in Annex D.

NOTE Methodology for the selection of batteries and batteries management systems for stand-alone electrification systems – specific case of automotive flooded lead-acid batteries available in developing countries is provided in IEC TS 62257-8-1.

5.4.4 Specific requirements

Specific requirements for PV arrays, wind turbine, generator sets and microhydro turbines are provided in the related documents (IEC 62548, IEC TS 62257-7-1, IEC TS 62257-7-3).

6 Safety issues

6.1 Electrical issues

6.1.1 General

All installations shall comply with IEC TS 62257-5 and more generally with IEC 60364 concerning the following items:

- protection against electric shock
  - requirements on the d.c. side;
  - requirements on the a.c. side;
- protection against overcurrent;
- protection against overload currents;
- protection against short circuits;
- protection against effects of lightning;
- wiring;
- isolation and switching;
- surge protective devices.

6.1.2 Specific requirements

6.1.2.1 Selectivity of the protection

Attention shall be paid to the selectivity of the protection; an example of a complete protection scheme taking account of selectivity is addressed in Annex A.

6.1.2.2 Protection against effects of lightning

For most stand-alone power systems, lightning risk is often low, and protection is usually not needed. The exceptions are installations on high ground and in lightning-prone areas, wind generator towers or masts, and aerial wiring where any part is exposed to a lightning risk.

In order to asses the necessity of providing protection to micropower plants against effects of lightning methodologies are provided in Annex B. As the cost of installing surge protection devices could be high, this assessment shall be made carefully.

Documents
Document Sharing Hub
Full document details: PD IEC/TS 62257-9-1:2016

If the risk assessed is quoted as being higher than 14 (Clause B.3) or if the number of thunderstorm days per year is higher than 25 days per year (Clause B.2), special provision shall be made in order to protect the micropower plant from the effect of lightning.

In any case, an equipotential bonding shall be made using a copper conductor (or conductor of other material e.g. aluminium and stainless steel, which has the resistivity equivalent to 16 mm^2 copper) with a sectional area of at least 16 mm² installed between the different generators and the "technical room". This conductor shall be installed direct in the earth, in the same ditch as the power cable as close as possible to it. One of the ends shall be connected to the earthing electrode of the external generator and the other shall be connected to a special terminal provided for this purpose in the technical room. This creates an equipotential bonding system as shown in Figure 5.

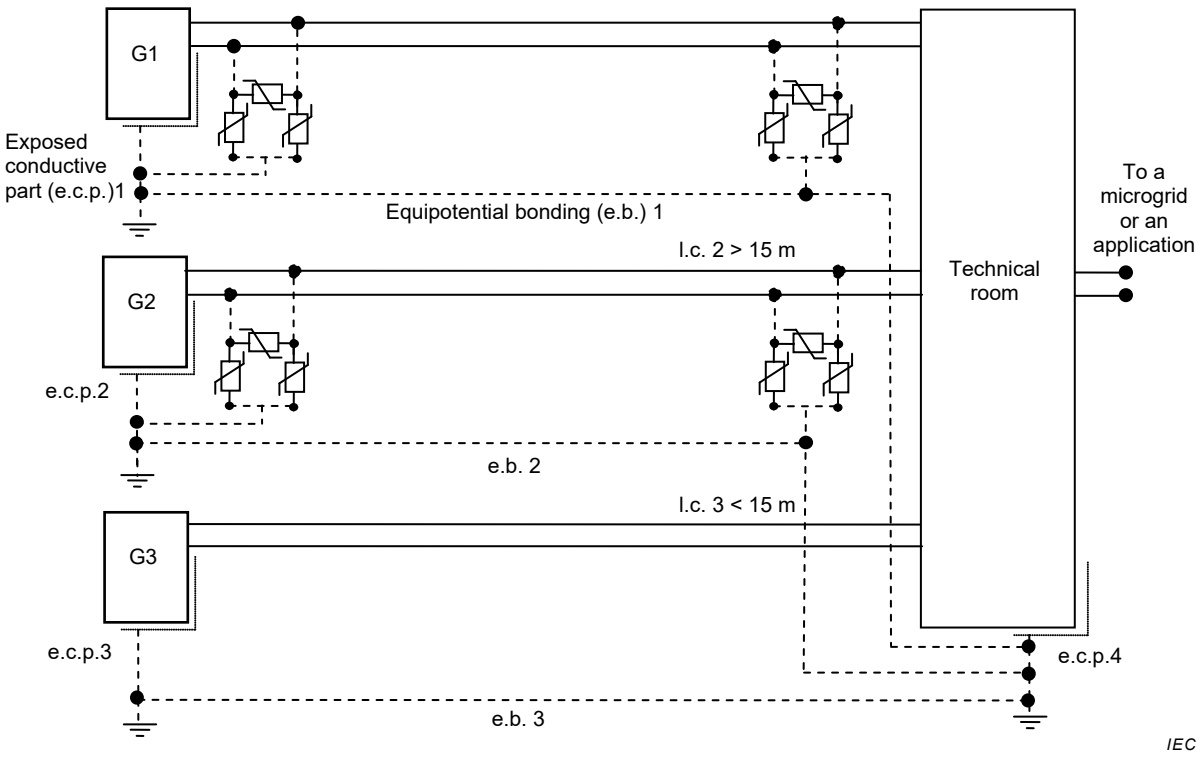

Figure 5 – Example of protection against effects of lightning and over-voltage for generators with two live conductors output (d.c. or a.c.) TNS P+N

If the distance between the external generators and the technical room is less than 15 m, no additional special measure is required.

If the distance between the external generators and the technical room is greater than 15 m, surge arresters shall be installed according to Figure 5.

Surge protective devices shall be installed between each live conductor (a.c. or d.c.) and between each live conductor and the earth at the two ends of the bonding conductor.

Another example is given in Figure 6 for a three phase a.c. (TNS P+N) system.

Documents
Document Sharing Hub
Full document details: PD IEC/TS 62257-9-1:2016