PD IEC TS 62738:2018

BSI Standards Publication

Ground-mounted photovoltaic power plants — Design guidelines and recommendations

Documents
Document Sharing Hub

Full document details: PD IEC TS 62738:2018

National foreword

This Published Document is the UK implementation of IEC TS 62738:2018.

The UK participation in its preparation was entrusted to Technical Committee GEL/82, Photovoltaic Energy Systems.

A list of organizations represented on this committee can be obtained on request to its secretary.

This publication does not purport to include all the necessary provisions of a contract. Users are responsible for its correct application.

© The British Standards Institution 2018
Published by BSI Standards Limited 2018

ISBN 978 0 580 88259 3

ICS 27.160

Compliance with a British Standard cannot confer immunity from legal obligations.

This Published Document was published under the authority of the Standards Policy and Strategy Committee on 31 August 2018.

Amendments/corrigenda issued since publication

Date	Text affected

Documents
Document Sharing Hub

Full document details: PD IEC TS 62738:2018

IEC TS 62738

Edition 1.0 2018-08

TECHNICAL SPECIFICATION

colour inside

Ground-mounted photovoltaic power plants – Design guidelines and recommendations

INTERNATIONAL
ELECTROTECHNICAL
COMMISSION

ICS 27.160

ISBN 978-2-8322-5909-2

Warning! Make sure that you obtained this publication from an authorized distributor.

® Registered trademark of the International Electrotechnical Commission

Documents
Document Sharing Hub

Full document details: PD IEC TS 62738:2018

CONTENTS

FOREWORD 5
INTRODUCTION 7
1 Scope 8
2 Normative references 8
3 Terms and definitions 11
4 Compliance with IEC 62548 11
5 PV array system configuration 12
5.1 General 12
5.2 Earthing configurations 12
5.2.1 General 12
5.2.2 Use of un-earthed d.c. circuits 12
5.2.3 Use of high-ohmic earthed d.c. circuits 12
5.2.4 Use of functionally earthed d.c. circuits 12
5.3 Array electrical diagrams 12
5.3.1 General 12
5.3.2 Multiple sub-array configurations 13
5.3.3 Single array configuration 15
5.3.4 Combiner boxes and string wiring harnesses 16
5.3.5 Series-parallel configuration 16
5.4 Energy storage in PV power plants 17
5.5 Array physical configurations 17
5.5.1 Fixed tilt arrays 17
5.5.2 Adjustable tilt arrays 17
5.5.3 Single axis tracking arrays 18
5.5.4 Two-axis tracking arrays 18
5.5.5 Concentrating PV arrays 18
5.5.6 Central inverter configurations 18
5.5.7 String or module inverter configurations 19
5.6 Mechanical design 20
5.6.1 Mechanical loads on PV structures 20
5.6.2 Wind 20
5.6.3 Snow 20
5.6.4 Thermal expansion 20
5.6.5 Flooding 20
5.6.6 Seismic activity 21
5.6.7 Corrosion 21
5.6.8 Access 21
6 Safety issues 21
6.1 General 21
6.2 Restricted access 22
6.2.1 General 22
6.2.2 Access to components 22
6.3 Protection against overcurrent 22
6.3.1 DC overcurrent protection devices 22
6.3.2 Requirement for string overcurrent protection 22
6.3.3 String overcurrent protection sizing 22

AVA Documents
Document Sharing Hub
Full document details: PD IEC TS 62738:2018

6.3.4 PV sub-array and array overcurrent protection ... 23
6.4 Protection against the effects of insulation faults ... 24
6.5 Protection against effects of lightning and overvoltage ... 24
6.5.1 Lightning protection ... 24
6.5.2 Protection against overvoltage ... 26
6.6 Protection against fire ... 26
6.6.1 Earth-fault protection ... 26
6.6.2 Protection against arcing currents ... 26
7 Selection and erection of electrical equipment ... 26
7.1 General ... 26
7.2 PV array design voltage ... 27
7.2.1 PV array maximum voltage ... 27
7.2.2 Considerations due to inverter MPPT voltage window ... 27
7.2.3 Considerations due to inverter efficiency ... 27
7.3 Component requirements ... 27
7.3.1 General ... 27
7.3.2 PV combiner boxes ... 28
7.3.3 Disconnectors and switch-disconnectors ... 29
7.3.4 Cables ... 30
7.3.5 Trackers ... 37
8 Acceptance ... 37
8.1 General ... 37
8.2 Monitoring ... 37
8.3 Commissioning tests ... 37
8.4 Preliminary performance acceptance test ... 37
8.5 Final performance acceptance test ... 37
9 Maintenance ... 38
10 Marking and documentation ... 38
10.1 General ... 38
10.2 Labelling and identification ... 38
10.2.1 General ... 38
10.2.2 Labelling of disconnection devices and combiner boxes ... 38
10.3 Documentation ... 38
11 Medium and high voltage a.c. systems ... 39
11.1 General ... 39
11.2 Selection of a.c. collection system voltage ... 39
11.3 Collection system configurations ... 39
11.3.1 General ... 39
11.3.2 Radial systems ... 39
11.3.3 Loop systems ... 40
11.4 Medium or high voltage transformers ... 40
11.4.1 Transformer types ... 40
11.4.2 Installation ... 40
11.4.3 Protection ... 41
11.5 Medium or high voltage switchgear and stations ... 41
11.5.1 General ... 41
11.5.2 Switchgear specifications ... 41
11.6 Medium voltage cable ... 41

AVA Documents
Document Sharing Hub
Full document details: PD IEC TS 62738:2018

11.7 Utility interface 42
12 Auxiliary power systems 42
13 Communications systems 42
13.1 General 42
13.2 Data sampling speed requirements 42
Annex A (informative) Inverter application considerations in PV power plants 43
A.1 Advantages and disadvantages of central inverters 43
A.2 Advantages and disadvantages of string inverters 43
A.3 Issues affecting inverter size 44
A.3.1 PV array output 44
A.3.2 Inverter ratings 44
A.3.3 Inverter output control requirements 44
A.3.4 PV power to inverter power ratio (PVIR) 44
Bibliography 46

Figure 1 – PV array diagram – multiple parallel string case with array divided into sub-arrays 13
Figure 2 – PV array example using a PCE with multiple MPPT d.c. inputs 14
Figure 3 – PV array using a PCE with multiple d.c. inputs internally connected to a common d.c. bus 15
Figure 4 – PV array diagram – multiple parallel string example 16
Figure 5 – Example power plant with fixed tilt array 17
Figure 6 – Example layout of power plant central inverter based array 19
Figure 7 – Example layout of power plant with string inverters 20
Figure 8 – Example ground plan for equipotential bonding of a PV array field 25
Figure 9 – Example of above-ground cable tray configurations for PV plants 32
Figure 10 – Example trench diagram with cables in ducts 34
Figure 11 – Example trench diagram with direct buried d.c. and communication cables 35
Figure 12 – Example trench diagram with direct buried medium voltage a.c. and communication cables 36

Documents
Document Sharing Hub

Full document details: PD IEC TS 62738:2018

INTERNATIONAL ELECTROTECHNICAL COMMISSION

GROUND-MOUNTED PHOTOVOLTAIC POWER PLANTS – DESIGN GUIDELINES AND RECOMMENDATIONS

FOREWORD

1) The International Electrotechnical Commission (IEC) is a worldwide organization for standardization comprising all national electrotechnical committees (IEC National Committees). The object of IEC is to promote international co-operation on all questions concerning standardization in the electrical and electronic fields. To this end and in addition to other activities, IEC publishes International Standards, Technical Specifications, Technical Reports, Publicly Available Specifications (PAS) and Guides (hereafter referred to as "IEC Publication(s)"). Their preparation is entrusted to technical committees; any IEC National Committee interested in the subject dealt with may participate in this preparatory work. International, governmental and non-governmental organizations liaising with the IEC also participate in this preparation. IEC collaborates closely with the International Organization for Standardization (ISO) in accordance with conditions determined by agreement between the two organizations.
2) The formal decisions or agreements of IEC on technical matters express, as nearly as possible, an international consensus of opinion on the relevant subjects since each technical committee has representation from all interested IEC National Committees.
3) IEC Publications have the form of recommendations for international use and are accepted by IEC National Committees in that sense. While all reasonable efforts are made to ensure that the technical content of IEC Publications is accurate, IEC cannot be held responsible for the way in which they are used or for any misinterpretation by any end user.
4) In order to promote international uniformity, IEC National Committees undertake to apply IEC Publications transparently to the maximum extent possible in their national and regional publications. Any divergence between any IEC Publication and the corresponding national or regional publication shall be clearly indicated in the latter.
5) IEC itself does not provide any attestation of conformity. Independent certification bodies provide conformity assessment services and, in some areas, access to IEC marks of conformity. IEC is not responsible for any services carried out by independent certification bodies.
6) All users should ensure that they have the latest edition of this publication.
7) No liability shall attach to IEC or its directors, employees, servants or agents including individual experts and members of its technical committees and IEC National Committees for any personal injury, property damage or other damage of any nature whatsoever, whether direct or indirect, or for costs (including legal fees) and expenses arising out of the publication, use of, or reliance upon, this IEC Publication or any other IEC Publications.
8) Attention is drawn to the Normative references cited in this publication. Use of the referenced publications is indispensable for the correct application of this publication.
9) Attention is drawn to the possibility that some of the elements of this IEC Publication may be the subject of patent rights. IEC shall not be held responsible for identifying any or all such patent rights.

The main task of IEC technical committees is to prepare International Standards. In exceptional circumstances, a technical committee may propose the publication of a technical specification when

- the required support cannot be obtained for the publication of an International Standard, despite repeated efforts, or
- the subject is still under technical development or where, for any other reason, there is the future but no immediate possibility of an agreement on an International Standard.

Technical specifications are subject to review within three years of publication to decide whether they can be transformed into International Standards.

IEC TS 62738, which is a technical specification, has been prepared by IEC technical committee 82: Solar photovoltaic energy systems.

Documents
Document Sharing Hub

Full document details: PD IEC TS 62738:2018

The text of this technical specification is based on the following documents:

Enquiry draft	Report on voting
82/1291/DTS	82/1374/RVDTS

Full information on the voting for the approval of this technical specification can be found in the report on voting indicated in the above table.

This document has been drafted in accordance with the ISO/IEC Directives, Part 2.

The committee has decided that the contents of this publication will remain unchanged until the stability date indicated on the IEC website under "http://webstore.iec.ch" in the data related to the specific publication. At this date, the publication will be

- transformed into an International standard,
- reconfirmed,
- withdrawn,
- replaced by a revised edition, or
- amended.

A bilingual version of this publication may be issued at a later date.

IMPORTANT – The 'colour inside' logo on the cover page of this publication indicates that it contains colours which are considered to be useful for the correct understanding of its contents. Users should therefore print this document using a colour printer.

Documents
Document Sharing Hub

Full document details: PD IEC TS 62738:2018

INTRODUCTION

This document sets out general guidelines and recommendations for the design and installation of utility scale ground-mounted photovoltaic (PV) power plants. The focus is largely on design aspects that differ from those of conventional residential and commercial PV systems. Power plants are a significant and growing component of the PV market, yet design methodologies range considerably, partly due to the fact that systems are not accessible to the public or non-qualified personnel. Overall guidelines are still needed to ensure safe, reliable, and productive systems.

Documents
Document Sharing Hub

Full document details: PD IEC TS 62738:2018

GROUND-MOUNTED PHOTOVOLTAIC POWER PLANTS – DESIGN GUIDELINES AND RECOMMENDATIONS

1 Scope

This document sets out general guidelines and recommendations for the design and installation of ground-mounted photovoltaic (PV) power plants. A PV power plant is defined within this document as a grid-connected, ground-mounted system comprising multiple PV arrays and interconnected directly to a utility's medium voltage or high voltage grid. Additional criteria is that PV power plants are restricted from access by non-qualified persons and are continuously monitored for safety and protection, either by on-site personnel or by active remote monitoring. Technical areas addressed are those that largely distinguish PV power plants from smaller, more conventional installations, including ground mounted array configurations, cable routing methods, cable selection, overcurrent protection strategies, equipotential bonding over large geographical areas, and equipment considerations.

Safety and design requirements are referenced to the applicable requirements of IEC 62548 to address distinct differences relative to the design requirements for residential, commercial and other non-power plant applications. In general, existing standards are referenced wherever possible for uniformity. Emphasis is placed on systems employing d.c. string based systems using large scale central inverters or 3-phase string inverters, but relevant sections are also applicable to systems employing a.c. modules or d.c./d.c. converters. Medium voltage transformers, switchgear, collection systems, substations, utility interconnection, auxiliary loads, energy storage systems, and communication services are addressed, but discussion is mostly limited to recommended references to other standards and requirements.

Rooftop-mounted systems, building integrated PV (BIPV) and building applied PV (BAPV) are not included in the scope of this document. The principles of restricted-access power plants are not compatible with systems on buildings, which are used for purposes other than power generation.

2 Normative references

The following documents are referred to in the text in such a way that some or all of their content constitutes requirements of this document. For dated references, only the edition cited applies. For undated references, the latest edition of the referenced document (including any amendments) applies.

IEC 60076-1, *Power transformers – Part 1: General*

IEC 60076-2, *Power transformers – Part 2: Temperature rise for liquid-immersed transformers*

IEC 60076-3, *Power transformers – Part 3: Insulation levels, dielectric tests and external clearances in air*

IEC 60076-4, *Power transformers – Part 4: Guide to the lightning impulse and switching impulse testing – Power transformers and reactors*

IEC 60076-5, *Power transformers – Part 5: Ability to withstand short-circuit*

IEC 60076-7, *Power transformers – Part 7: Loading guide for mineral-oil-immersed power transformers*

Documents
Document Sharing Hub

Full document details: PD IEC TS 62738:2018

IEC 60085, *Electrical insulation – Thermal evaluation and designation*

IEC 60137, *Insulated bushings for alternating voltages above 1000 V*

IEC 60183, *Guidance for the selection of high-voltage A.C. cable systems*

IEC 60228, *Conductors of insulated cables*

IEC 60255-21-3, *Electrical relays – Part 21: Vibration, shock, bump and seismic tests on measuring relays and protection equipment – Section 3: Seismic tests*

IEC 60296, *Fluids for electrotechnical applications – Unused mineral insulating oils for transformers and switchgear*

IEC 60364-5-52, *Low-voltage electrical installations – Part 5-52: Selection and erection of electrical equipment – Wiring systems*

IEC 60364-5-54, *Low-voltage electrical installations – Part 5-54: Selection and erection of electrical equipment – Earthing arrangements and protective conductors*

IEC 60502-1, *Power cables with extruded insulation and their accessories for rated voltages from 1 kV (Um = 1,2 kV) up to 30 kV (Um = 36 kV) – Part 1: Cables for rated voltages of 1 kV ((Um = 1,2 kV) and 3 kV (Um = 3,6 kV)*

IEC 60502-2, *Power cables with extruded insulation and their accessories for rated voltages from 1 kV (Um = 1,2 kV) up to 30 kV (Um = 36 kV) – Part 2: Cables for rated voltages from 6 kV (Um = 7,2 kV) up to 30 kV (Um = 36 kV)*

IEC 60853 (all parts), *Calculation of the cyclic and emergency current rating of cables*

IEC 60870-5-104, *Telecontrol equipment and systems – Part 5-104: Transmission protocols – Network access for IEC 60870-5-101 using standard transport profiles*

IEC TR 60890, *A method of temperature-rise verification of low-voltage switchgear and controlgear assemblies by calculation*

IEC 60947-3:2008, *Low-voltage switchgear and controlgear – Part 3: Switches, disconnectors, switch-disconnectors and fuse-combination units*

IEC 60947-3:2008/AMD1:2012
IEC 60947-3:2008/AMD2:2015

IEC 61000-4-2, *Electromagnetic compatibility (EMC) – Part 4-2: Testing and measurement techniques – Electrostatic discharge immunity test*

IEC 61215-2, *Terrestrial photovoltaic (PV) modules – Design qualification and type approval – Part 2: Test procedures*

IEC 61238-1 (all parts), *Compression and mechanical connectors for power cables*

IEC 61427-2, *Secondary cells and batteries for renewable energy storage – General requirements and methods of test – Part 2: On-grid applications*

IEC 61439-1, *Low-voltage switchgear and controlgear assemblies – Part 1: General rules*

Documents
Document Sharing Hub

Full document details: PD IEC TS 62738:2018

IEC 61439-2, *Low-voltage switchgear and controlgear assemblies – Part 2: Power switchgear and controlgear assemblies*

IEC 61643-32, *Low-voltage surge protective devices – Part 32: Surge protective devices connected to the d.c. side of photovoltaic installations – Selection and application principles*

IEC 61724-1, *Photovoltaic system performance – Part 1: Monitoring*

IEC TS 61724-2, *Photovoltaic system performance – Part 2: Capacity evaluation method*

IEC TS 61724-3, *Photovoltaic system performance – Part 3: Energy evaluation method*

IEC 61850 (all parts), *Communication networks and systems for power utility automation*

IEC 61936-1, *Power installations exceeding 1 kV a.c. – Part 1: Common rules*

IEC 62109-1, *Safety of power converters for use in photovoltaic power systems – Part 1: General requirements*

IEC 62109-2, *Safety of power converters for use in photovoltaic power systems – Part 2: Particular requirements for inverters*

IEC 62271-1, *High-voltage switchgear and controlgear – Part 1: Common specifications for alternating current switchgear and controlgear*

IEC 62271-100, *High-voltage switchgear and controlgear – Part 100: Alternating current circuit-breakers*

IEC 62271-102, *High-voltage switchgear and controlgear – Part 102: Alternating current disconnectors and earthing switches*

IEC 62271-103, *High-voltage switchgear and controlgear – Part 103: Switches for rated voltages above 1 kV up to and including 52 kV*

IEC 62271-200, *High-voltage switchgear and controlgear – Part 200: AC metal-enclosed switchgear and controlgear for rated voltages above 1 kV and up to and including 52 kV*

IEC TS 62271-210, *High-voltage switchgear and controlgear – Part 210: Seismic qualification for metal enclosed and solid-insulation enclosed switchgear and controlgear assemblies for rated voltages above 1 kV and up to and including 52 kV*

IEC TR 62271-300, *High-voltage switchgear and controlgear – Part 300: Seismic qualification of alternating current circuit-breakers*

IEC 62305-2, *Protection against lightning – Part 2: Risk management*

IEC 62446-1, *Photovoltaic (PV) systems – Requirements for testing, documentation and maintenance – Part 1: Grid connected systems – Documentation, commissioning tests and inspection*

IEC 62446-2, *Photovoltaic (PV) systems – Requirements for testing, documentation and maintenance – Part 2: Grid connected systems – Maintenance of PV systems* (to be published)

IEC 62548:2016, *Photovoltaic (PV) arrays – Design requirements*

Documents
Document Sharing Hub

Full document details: PD IEC TS 62738:2018

IEC 62817, *Photovoltaic systems – Design qualification of solar trackers*

IEC 62852, *Connectors for DC-application in photovoltaic systems – Safety requirements and tests*

EN 50539-11, *Low-voltage surge protective devices – Surge protective devices for specific application including d.c. – Part 11: Requirements and tests for SPDs in photovoltaic applications*

3 Terms and definitions

For the purposes of this document, the terms and definitions given in IEC 62548 as well as the following apply.

ISO and IEC maintain terminological databases for use in standardization at the following addresses:

- IEC Electropedia: available at http://www.electropedia.org/
- ISO Online browsing platform: available at http://www.iso.org/obp

3.1
PV power plant
grid-connected, ground-mounted PV system comprising multiple PV arrays and interconnected directly to a utility's medium voltage or high voltage grid

Note 1 to entry: Additional criteria are that PV power plants are restricted from access by non-qualified personnel and are continuously monitored for safety and protection, either by on-site personnel or by active remote monitoring.

3.2
electrically skilled person
person with relevant education and experience to enable him or her to perceive risks and to avoid hazards which electricity can create

3.3
electrically instructed person
person adequately advised or supervised by electrically skilled persons to enable him or her to perceive risks and to avoid hazards which electricity can create

3.4
ordinary person
person who is neither a skilled person nor an instructed person

3.5
string wiring harness
cable assembly that aggregates the output of multiple PV string conductors along a single main conductor

Note 1 to entry: The harness may or may not include fusing on the individual string conductors. The wiring harness typically does not include a disconnect device in line.

4 Compliance with IEC 62548

The design, erection and verification of PV power plants as defined in this document should generally comply with the requirements of IEC 62548 and its references to the IEC 60364 series.

Documents
Document Sharing Hub

Full document details: PD IEC TS 62738:2018

Specific exceptions and variations to the requirements of IEC 62548 called out in this document are permissible due to the restricted access conditions placed on PV power plants.

5 PV array system configuration

5.1 General

This clause discusses PV array earthing, control, layout and mechanical configurations found in PV power plants.

5.2 Earthing configurations

5.2.1 General

Considerations for earthing a PV array are addressed in this clause. The requirements of manufacturers of PV modules and manufacturers of power conversion equipment (PCE) to which the PV array is connected shall be taken into account in determining the allowable or required system earthing arrangements.

5.2.2 Use of un-earthed d.c. circuits

When installed with a residual current monitoring system and/or with isolation resistance detection, PV systems with un-earthed d.c. arrays offer robust earth fault protection. A failure in any cable (positive or negative), causing a short circuit from the cable to an earthed surface results only in a shift of the array voltage reference from a floating state to an earth-referenced state. It does not create a closed circuit for fault current to flow, and therefore does not present a fire hazard. Un-earthed d.c. circuits are also a requirement where simple separation or isolation from an earthed a.c. system is not provided by the inverter or a transformer.

5.2.3 Use of high-ohmic earthed d.c. circuits

High-ohmic earthed systems may be used in plants where operators want to achieve some of the benefits of an un-earthed or floating system while still maintaining an array voltage reference to ground to prevent potential induced degradation (PID). Resistance values are set to limit fault current to a target level (below 300 mA for example) in case of a hard fault occurring on the unreferenced d.c. circuit pole. This significantly reduces the arcing and fire causing currents that can occur with grounded systems, specifically those without supplemental high-sensitive ground fault detection.

5.2.4 Use of functionally earthed d.c. circuits

Protective earthing of any of the conductors of the PV array is not permitted. Earthing of one of the conductors of the PV array for functional reasons is allowed through internal connections inherent in the PCE or other earth fault protective device if designed and qualified for this configuration. Functionally earthed d.c. array based systems are sometimes used to prevent module PID.

5.3 Array electrical diagrams

5.3.1 General

Figure 1 through Figure 4 show the typical array electrical configurations for PV power plants. Typical power plants employ multiple array-PCE “blocks” resembling the configurations shown in Figure 1 through Figure 3. Power plants may also employ string inverter configurations as shown in Figure 4, or module level micro-inverters.

Documents
Document Sharing Hub

Full document details: PD IEC TS 62738:2018

5.3.2 Multiple sub-array configurations

PV arrays in power plants are most often configured with multiple sub-arrays. The sub-arrays are connected to large central inverters having multiple d.c. inputs, as shown in Figure 2 and Figure 3, or to PCEs with a single d.c. input via a separate PV array combiner box (refer to Figure 1). Overcurrent protection and cable sizing within the various sections of the PV array(s) are dependent on the limiting of any back-fed currents from the PCE and from parallel connected arrays.

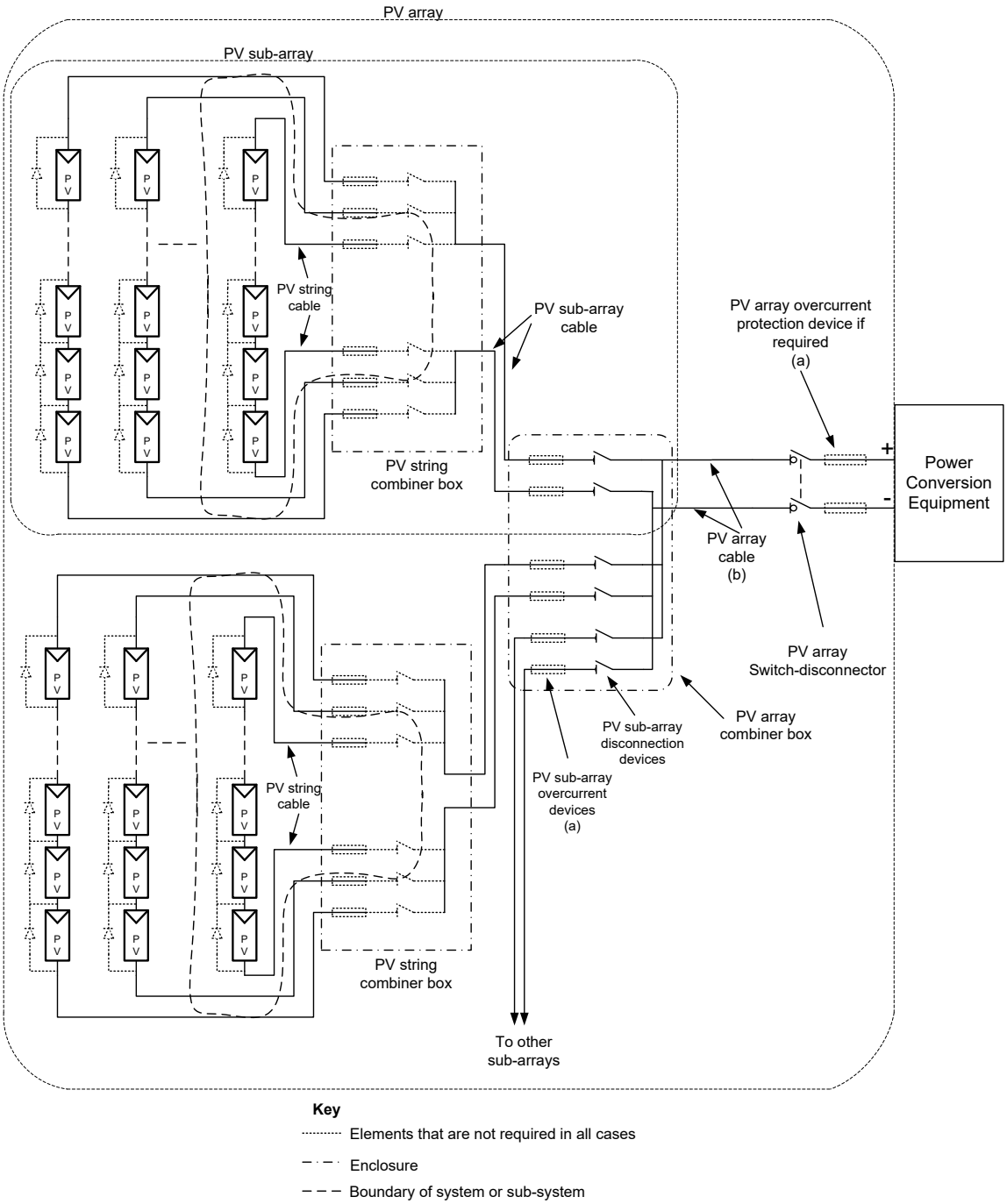

SOURCE: IEC 62548

a) Overcurrent protection devices where required see 6.3.

b) In some systems the PV array cable may not exist and all the PV strings or PV sub-arrays may be terminated in a combiner box immediately adjacent to or inside the power conversion equipment.

Figure 1 – PV array diagram – multiple parallel string case with array divided into sub-arrays

Documents
Document Sharing Hub
Full document details: PD IEC TS 62738:2018