PD IEC TS 62786-1:2023

BSI Standards Publication

Distributed energy resources connection with the grid

Part 1: General requirements

Documents
Document Sharing Hub

Full document details: PD IEC TS 62786-1:2023

National foreword

This Published Document is the UK implementation of IEC TS 62786-1:2023.

The UK participation in its preparation was entrusted to Technical Committee GEL/8, Systems Aspects for Electrical Energy Supply.

A list of organizations represented on this committee can be obtained on request to its committee manager.

Contractual and legal considerations

This publication has been prepared in good faith, however no representation, warranty, assurance or undertaking (express or implied) is or will be made, and no responsibility or liability is or will be accepted by BSI in relation to the adequacy, accuracy, completeness or reasonableness of this publication. All and any such responsibility and liability is expressly disclaimed to the full extent permitted by the law.

This publication is provided as is, and is to be used at the recipient's own risk.

The recipient is advised to consider seeking professional guidance with respect to its use of this publication.

This publication is not intended to constitute a contract. Users are responsible for its correct application.

This publication is not to be regarded as a British Standard.

© The British Standards Institution 2023
Published by BSI Standards Limited 2023

ISBN 978 0 580 99721 1

ICS 29.240.01

Compliance with a Published Document cannot confer immunity from legal obligations.

This Published Document was published under the authority of the Standards Policy and Strategy Committee on 31 December 2023.

Amendments/corrigenda issued since publication

Date	Text affected

Documents
Document Sharing Hub

Full document details: PD IEC TS 62786-1:2023

IEC TS 62786-1

Edition 1.0 2023-11

TECHNICAL SPECIFICATION

colour inside

Distributed energy resources connection with the grid – Part 1: General requirements

INTERNATIONAL
ELECTROTECHNICAL
COMMISSION

ICS 29.240.01

ISBN 978-2-8322-7927-4

Warning! Make sure that you obtained this publication from an authorized distributor.

Documents
Document Sharing Hub

® Registered trademark of the International Electrotechnical Commission

Full document details: PD IEC TS 62786-1:2023

CONTENTS

FOREWORD 5
1 Scope and object 7
2 Normative references 7
3 Terms, definitions and abbreviated terms 8
3.1 Terms and definitions 8
4 Requirements for generating plants 14
4.1 General 14
4.2 Connection scheme 14
4.3 Choice of switchgear 14
4.3.1 General 14
4.3.2 Interface switch 15
4.4 Normal operating range 15
4.4.1 General 15
4.4.2 Operating frequency range 15
4.4.3 Operating voltage range 15
4.5 Immunity to disturbances 16
4.5.1 General 16
4.5.2 Rate of change of frequency (ROCOF) immunity 16
4.5.3 Undervoltage ride through (UVRT) requirements 18
4.5.4 Overvoltage ride through (OVRT) requirements 19
4.5.5 Rapid phase angle change immunity 20
4.6 Active power response to frequency deviation 21
4.7 Power response to voltage changes 21
4.7.1 General 21
4.7.2 Voltage support by reactive power 21
4.7.3 Reactive power control modes 22
4.7.4 Voltage related active power control 22
4.7.5 Voltage related reactive power response 23
4.7.6 Additional reactive current requirements on generating plants 24
4.8 EMC and power quality 29
4.8.1 General 29
4.8.2 Direct current (DC) injection 29
4.9 Interface protection 29
4.9.1 General 29
4.9.2 Requirements on voltage and frequency protection 31
4.9.3 Means to detect islanding situation 32
4.9.4 Digital input to the interface protection 33
4.10 Connection and starting to generate electrical power 33
4.10.1 General 33
4.10.2 Connection of synchronous-type generators 33
4.10.3 Autoreclose of distribution lines 33
4.11 Ceasing and reduction of active power on set point 33
4.12 Remote information exchange 34
4.12.1 General 34
4.12.2 Monitoring and control 34
4.12.3 Communication 34

AVA Documents
Document Sharing Hub

4.13 Requirements regarding single fault tolerance of interface protection system and interface switch 35
5 Conformance tests 35
Annex A (normative) Operating frequency range 36
Annex B (normative) Operating voltage range 37
Annex C (normative) Undervoltage ride through capability of DER 38
Annex D (normative) Overvoltage ride through parameters 39
Annex E (informative) Reactive power control behaviour of DC to AC power conversion equipment used in DER in conjunction with synchronous generators 40
E.1 Background 40
E.2 Power system with DER configuration 40
E.3 Reactive power directions with leading/lagging of current phase angle to voltage phase 40
E.4 Reactive power control of synchronous generators 41
E.5 Reactive power control of power conversion equipment 42
E.6 Reactive power effect as reactive and capacitive load 42
E.7 Conclusion 43
Annex F (normative) Summary of power thresholds to be defined by individual countries 44
Bibliography 45

Figure 1 – Example of electricity generating plant connected to a network (schematic view of switches) 12
Figure 2 – Under frequency ride through capability requirements of DER 17
Figure 3 – Over frequency ride through capability requirements of DER 17
Figure 4 – Instantaneous frequency change ride through requirement of DER 18
Figure 5 – Under voltage ride through capability requirements of DER 18
Figure 6 – Power recovering requirements for UVRT operation of DER (example) 19
Figure 7 – Over voltage ride through capability 20
Figure 8 – Example of instantaneous voltage phase angle change during UVRT 20
Figure 9 – Typical power-frequency response curve 21
Figure 10 – Typical volt-watt response curve 23
Figure 11 – Typical volt-var response curve 24
Figure 12 – Principle of voltage support during faults and voltage steps (DBL: lower deadband limit; DBH: higher deadband limit) 27
Figure 13 – Accuracy requirement for additional reactive current in positive and negative sequence (LTR: limit of tolerance range) 28
Figure 14 – Operation of protection functions 32
Figure E.1 – Configuration schematic of a power system 40
Figure E.2 – Reactive and active power control image of syncronous generators and DER 42

Table 1 – Operating frequency requirements of DER 15
Table 2 – Operating voltage requirements of DER 16
Table 3 – Volt watt mode parameters (example) 22
Table 4 – volt-var response set-point values for reference voltages (example) 23
Table 5 – Interface protection functions 30

AVA Documents
Document Sharing Hub
Full document details: PD IEC TS 62786-1:2023

Table A.1 – Continuous operating frequency range 36
Table A.2 – Limited operating frequency range 36
Table B.1 – Continuous operating POC voltage range 37
Table B.2 – Limited operating voltage range 37
Table C.1 – UVRT capability of DER with an interface to the grid based on a synchronous generator 38
Table C.2 – UVRT capability of DER with an interface to the grid based on non-synchronous generators (eg. converters, DFIG, etc.) 38
Table D.1 – OVRT capability of DER 39
Table E.1 – Operation and behaviours of synchronous generators, dispersed loads and DER43

Documents
Document Sharing Hub
Full document details: PD IEC TS 62786-1:2023

INTERNATIONAL ELECTROTECHNICAL COMMISSION

DISTRIBUTED ENERGY RESOURCES CONNECTION WITH THE GRID –

Part 1: General requirements

FOREWORD

1) The International Electrotechnical Commission (IEC) is a worldwide organization for standardization comprising all national electrotechnical committees (IEC National Committees). The object of IEC is to promote international co-operation on all questions concerning standardization in the electrical and electronic fields. To this end and in addition to other activities, IEC publishes International Standards, Technical Specifications, Technical Reports, Publicly Available Specifications (PAS) and Guides (hereafter referred to as "IEC Publication(s)"). Their preparation is entrusted to technical committees; any IEC National Committee interested in the subject dealt with may participate in this preparatory work. International, governmental and non-governmental organizations liaising with the IEC also participate in this preparation. IEC collaborates closely with the International Organization for Standardization (ISO) in accordance with conditions determined by agreement between the two organizations.
2) The formal decisions or agreements of IEC on technical matters express, as nearly as possible, an international consensus of opinion on the relevant subjects since each technical committee has representation from all interested IEC National Committees.
3) IEC Publications have the form of recommendations for international use and are accepted by IEC National Committees in that sense. While all reasonable efforts are made to ensure that the technical content of IEC Publications is accurate, IEC cannot be held responsible for the way in which they are used or for any misinterpretation by any end user.
4) In order to promote international uniformity, IEC National Committees undertake to apply IEC Publications transparently to the maximum extent possible in their national and regional publications. Any divergence between any IEC Publication and the corresponding national or regional publication shall be clearly indicated in the latter.
5) IEC itself does not provide any attestation of conformity. Independent certification bodies provide conformity assessment services and, in some areas, access to IEC marks of conformity. IEC is not responsible for any services carried out by independent certification bodies.
6) All users should ensure that they have the latest edition of this publication.
7) No liability shall attach to IEC or its directors, employees, servants or agents including individual experts and members of its technical committees and IEC National Committees for any personal injury, property damage or other damage of any nature whatsoever, whether direct or indirect, or for costs (including legal fees) and expenses arising out of the publication, use of, or reliance upon, this IEC Publication or any other IEC Publications.
8) Attention is drawn to the Normative references cited in this publication. Use of the referenced publications is indispensable for the correct application of this publication.
9) IEC draws attention to the possibility that the implementation of this document may involve the use of (a) patent(s). IEC takes no position concerning the evidence, validity or applicability of any claimed patent rights in respect thereof. As of the date of publication of this document, IEC had not received notice of (a) patent(s), which may be required to implement this document. However, implementers are cautioned that this may not represent the latest information, which may be obtained from the patent database available at https://patents.iec.ch. IEC shall not be held responsible for identifying any or all such patent rights.

IEC TS 62786-1 has been prepared by IEC Technical Committee 8: System aspects of electrical energy supply. It is a Technical Specification.

The text of this Technical Specification is based on the following documents:

Draft	Report on voting
8/1656/DTS	8/1677/RVDTS

Full information on the voting for its approval can be found in the report on voting indicated in the above table.

The language used for the development of this Technical Specification is English.

Documents
Document Sharing Hub

This document was drafted in accordance with ISO/IEC Directives, Part 2, and developed in accordance with ISO/IEC Directives, Part 1 and ISO/IEC Directives, IEC Supplement, available at www.iec.ch/members_experts/refdocs. The main document types developed by IEC are described in greater detail at www.iec.ch/publications.

A list of all parts in the IEC 62786 series, published under the general title *Distributed energy resources connection with the grid*, can be found on the IEC website.

The committee has decided that the contents of this document will remain unchanged until the stability date indicated on the IEC website under webstore.iec.ch in the data related to the specific document. At this date, the document will be

- reconfirmed,
- withdrawn,
- replaced by a revised edition, or
- amended.

IMPORTANT – The "colour inside" logo on the cover page of this document indicates that it contains colours which are considered to be useful for the correct understanding of its contents. Users should therefore print this document using a colour printer.

Documents
Document Sharing Hub

Full document details: PD IEC TS 62786-1:2023

DISTRIBUTED ENERGY RESOURCES CONNECTION WITH THE GRID –

Part 1: General requirements

1 Scope and object

This part of IEC 62786, which is a Technical Specification, provides principles and general technical requirements for distributed energy resources (DER) connected to an electric power network (in the following: the "network"). It applies to the planning, design, operation and connection of DER to networks. It includes general requirements, connection scheme, choice of switchgear, normal operating range, immunity to disturbances, active power response to frequency deviations, reactive power response to voltage changes, EMC and power quality, interface protection, connection and start to generate electrical power, active power management, monitoring, control and communication, and conformance tests.

It is supplemented by additional parts of IEC 62786 series, covering specific aspects.

This document specifies interface and interoperability requirements for connection of DER to a network operating at a nominal frequency of 50 Hz or 60 Hz. These requirements are intended for application at the point of connection (POC) of the DER to the grid. In some situations, the requirements can be the applied at the AC terminals of the generator. Additional parts of IEC 62786 provide more specific requirements.

DER include distributed generation and electrical energy storage in the form of synchronous generators, asynchronous generators, power converters, etc., connected to the medium voltage (MV) or low voltage (LV) network.

2 Normative references

The following documents are referred to in the text in such a way that some or all of their content constitutes requirements of this document. For dated references, only the edition cited applies. For undated references, the latest edition of the referenced document (including any amendments) applies.

IEC 60255-12, *Electrical relays – Part 12: Directional relays and power relays with two input energizing quantities*

IEC 60255-127, *Measuring relays and protection equipment − Part 127: Functional requirements for over/under voltage protection*

IEC 60255-151, *Measuring relays and protection equipment − Part 151: Functional requirements for over/under current protection*

IEC 60255-181, *Measuring relays and protection equipment − Part 181: Functional requirements for frequency protection*

IEC 61000 (all parts), *Electromagnetic compatibility (EMC)*

IEC 61850 (all parts), *Communication networks and systems for power utility automation*

IEC 62116, *Utility-interconnected photovoltaic inverters – Test procedure of islanding prevention measures*

Documents
Document Sharing Hub

Full document details: PD IEC TS 62786-1:2023

IEC TS 62749, *Assessment of power quality – Characteristics of electricity supplied by public networks*

3 Terms, definitions and abbreviated terms

3.1 Terms and definitions

For the purposes of this document, the following terms and definitions apply.

ISO and IEC maintain terminological databases for use in standardization at the following addresses:

- IEC Electropedia: available at http://www.electropedia.org/
- ISO Online browsing platform: available at http://www.iso.org/obp

3.1.1
black start
startup of an electric power system from a blackout through internal energy resources

3.1.2
converter-type generator
generator that produces electrical power and is connected to the network via a converter, including doubly fed induction machines

3.1.3
declared supply voltage
U_C
supply voltage agreed by the power system operator and the network user

Note 1 to entry: Generally declared supply voltage U_C is the nominal voltage U_n but it may be different according to the agreement between the DSO and the network user.

3.1.4
distributed energy resource
DER
generators (with their unit auxiliaries, protection and connection equipment), including loads having a generating mode (such as electrical energy storage systems), connected to a low voltage or a medium-voltage network

[SOURCE: IEC 60050-617:2017, 617-04-20, modified – unit has been added.]

3.1.5
distribution network
electric power network for the distribution of electric power from and to network users for which a distribution system operator (DSO) is responsible

3.1.6
distribution system operator
DSO
party operating a distribution network

Note 1 to entry: In some countries, a DSO is also referred to as DNO (distribution network operator).

[SOURCE: IEC 60050-617:2009, 617-02-10, modified – Note 1 to entry has been added.]

Documents
Document Sharing Hub

Full document details: PD IEC TS 62786-1:2023

3.1.7
electrical proximity
state of two or more pieces of equipment linked to one another by connections the impedances of which are negligible as compared to other impedances involved

3.1.8
flicker
impression of unsteadiness of visual sensation induced by a light stimulus whose luminance or spectral distribution fluctuates with time

Note 1 to entry: Flicker can be calculated by short-term flicker indicator P_{st} and long-term flicker indicator P_{lt}.

[SOURCE: IEC 60050-161:1990, 161-08-13, modified – Note 1 to entry has been added.]

3.1.9
fundamental frequency
frequency of the fundamental component of a periodic quantity

Note 1 to entry: For the purpose of this document, the fundamental frequency is the same as the power supply frequency, e.g. 50 Hz or 60 Hz.

[SOURCE: IEC 60050-103:2009, 103-07-21, modified – Note 1 to entry has been added.]

3.1.10
fundamental component
sinusoidal component of the Fourier series of a periodic quantity having the frequency of the quantity itself

[SOURCE: IEC 60050-103:2009, 103-07-19]

3.1.11
generating unit
set of equipment connected together whose primary purpose is to generate electrical power.

3.1.12
generating plant
group of generating units including auxiliaries connected to one POC

3.1.13
harmonic component
sinusoidal component of the Fourier series of a periodic quantity, the harmonic order of which is an integer number greater than one

Note 1 to entry: A component of harmonic n (with n>1) is generally designated n^{th} harmonic. the designation of the fundamental component as the "1st harmonic" is not recommended.

[SOURCE: IEC 60050-103:2009, 103-07-25]

3.1.14
interface protection
combination of protection relay functions which open the interface switch of a generating unit and prevents its closure, whichever is appropriate, in the case of:

- a fault in the electric power network;
- an unintentional islanding situation;
- voltage and/or frequency being outside the tolerance of their operating ranges for continuous operation

Documents
Document Sharing Hub
Full document details: PD IEC TS 62786-1:2023

3.1.15
interharmonic frequency
frequency which is a non-integer multiple of the reference fundamental frequency

Note 1 to entry: By extension from harmonic order, the interharmonic order is the ratio of an interharmonic frequency to the fundamental frequency. This ratio is not an integer (Recommended notation: "m").

Note 2 to entry: In the case where m<1 the term subharmonic frequency can be used.

[SOURCE: IEC 60050-551:2001, 551-20-06, modified – Note 1 to entry and Note 2 to entry have been added.]

3.1.16
interharmonic component
sinusoidal component of a periodic quantity having an interharmonic frequency

Note 1 to entry: Its value is normally expressed as an RMS value.

[SOURCE: IEC 60050-551:2001, 551-20-08, modified – The existing note has been deleted and a new Note 1 to entry has been added.]

3.1.17
interoperability
property permitting diverse systems or components to work together for a specified purpose

[SOURCE: IEC 60050-871:2018, 871-05-06]

3.1.18
long-term flicker indicator
measure of flicker evaluated over a specified time interval of a relatively long duration, using successive values of the short-term flicker indicator

Note 1 to entry: The duration is typically 2 hours, using 12 successive values of P_{st}, in accordance with IEC 61000-4-15.

[SOURCE: IEC 60050-161:1990, 161-08-19]

3.1.19
low voltage
LV
set of voltage levels used for the distribution of electricity and whose upper limit is generally accepted to be 1 000 V for alternating current

[SOURCE: IEC 60050-601:1985, 601-01-26]

3.1.20
medium voltage
MV
any set of voltage levels lying between low and high voltage

Note 1 to entry: The boundaries between medium and high voltage levels that overlap and depend on local circumstances as well as history or common usage. Nevertheless, the band 1 kV to 35 kV is considered as the accepted medium voltage boundary.

Note 2 to entry: Because of existing network structures, boundary between MV and HV can be different from country to country.

[SOURCE: IEC 60050-601:1985, 601-01-28, modified – The existing note has been modified and Note 2 to entry has been added]

Documents
Document Sharing Hub

Full document details: PD IEC TS 62786-1:2023

3.1.21
point of connection
POC
reference point on the electric power system where the user's electrical facility is connected

Note 1 to entry: See Figure 1.

[SOURCE: IEC 60050-617:2009, 617-04-01]

3.1.22
power converter
electronic equipment that converts

- AC to DC (rectifier)
- DC to AC (inverter)
- DC to DC (DC-to-DC converter)
- AC to AC (AC-to-AC converter)

[SOURCE: IEC TR 61850-90-7:2013, 3.1.16]

3.1.23
port
location giving access to a device or network where electromagnetic energy or signals may be supplied or received or where the device or network variables may be observed or measured

[SOURCE: IEC TR 62109.1:2010, 3.64]

3.1.24
power factor
under periodic conditions, ratio of the absolute value of the active power P to the apparent power S:

$$\lambda = \frac{|P|}{S}$$

Note 1 to entry: Under sinusoidal conditions, the power factor is the absolute value of the active factor.

[SOURCE: IEC 60050-131:2002, 131-11-46]

3.1.25
rate of change of frequency
ROCOF
amount of frequency change per unit of time

3.1.26
short-term flicker indicator
a measure of flicker evaluated over a specified time interval of a relatively short duration

Note 1 to entry: The duration is typically 10 minutes, in accordance with IEC 61000-4-15.

[SOURCE: IEC 60050-161:1990, 161-08-18]

3.1.27
short-time withstand current
the current that a circuit or a switching device in the closed position can carry during a specified short time under prescribed conditions of use and behaviour

Documents
Document Sharing Hub

Full document details: PD IEC TS 62786-1:2023

[SOURCE: IEC 60050-441:1984, 441-17-17]

3.1.28
single fault tolerance
built-in capability of a system to provide continued correct execution of its function in the presence of a single fault

3.1.29
system operator
party responsible for safe and reliable operation of a part of the electric power system in a certain area and for connection to other parts of the electric power system

[SOURCE: IEC 60050-617:2009, 617-02-09]

3.1.30
switch
device for changing the electric connections among its terminals

Note 1 to entry: See Figure 1.

[SOURCE: IEC 60050-151:2001, 151-12-22]

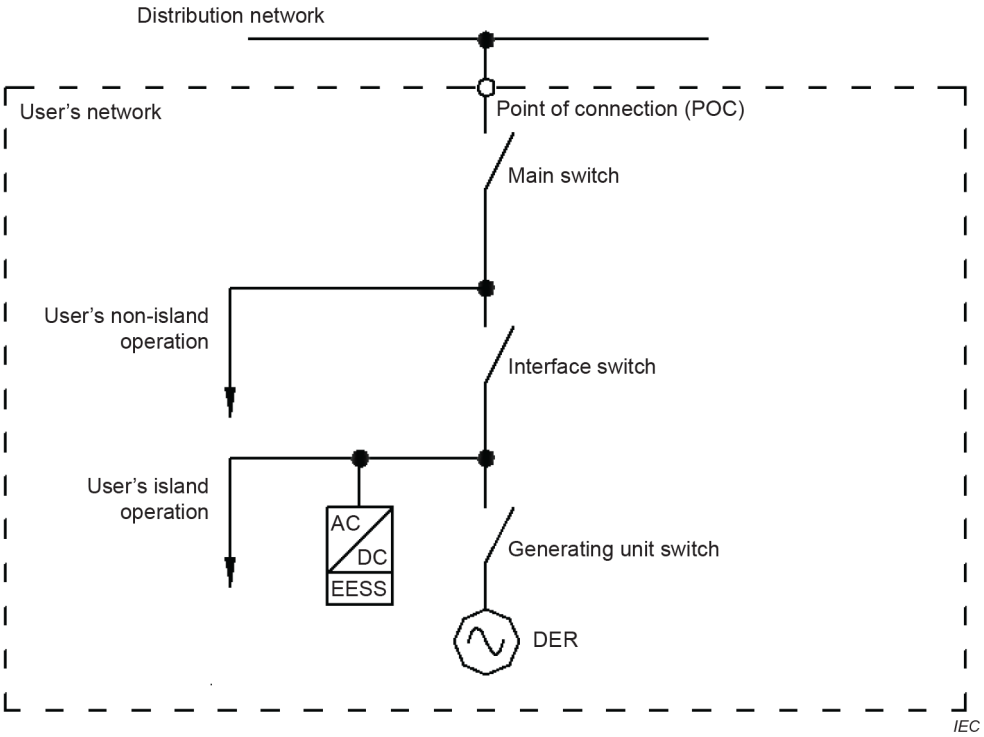

Figure 1 – Example of electricity generating plant connected to a network (schematic view of switches)

3.1.31
main switch
switch installed as close as possible to the point of connection, for protection against internal faults and disconnection of the whole plant from the network

Note 1 to entry: See also Figure 1.

Documents
Document Sharing Hub
Full document details: PD IEC TS 62786-1:2023

3.1.32
unit auxiliaries
any auxiliary equipment specific to the unit and indispensable for its operation

Examples: mills, circulating pumps, induced draught fans.

[SOURCE: IEC 60050-602:1983, 602-02-29]

3.1.33
interface switch
switch (circuit breaker, switch or contactor) installed in the producer's network, for separating the part(s) of the producer's network that contain at least one generation unit from the network

Note 1 to entry: See also Figure 1.

Note 2 to entry: In some situations, the interface switch can be used to enable island operation of part of the producer's network, if technically feasible.

3.1.34
generating unit switch
switch installed electrically close to the terminals of each generating unit of the generating plant, for protection and disconnection of that generating unit

Note 1 to entry: See also Figure 1.

3.1.35
voltage deviation
difference between the supply voltage at a given instant and the declared supply voltage

[SOURCE: IEC 60050-614:2016, 614-01-4]

3.1.36
voltage dip
sudden voltage reduction at a point in an electric power system, followed by voltage recovery after a short time interval, from a few periods of the sinusoidal wave of the voltage to a few seconds

[SOURCE: IEC 60050-614:2016, 614-01-08]

3.1.37
voltage fluctuation
series of voltage changes or a continuous variation of the RMS or peak value of the voltage

Note 1 to entry: Whether the RMS or peak value is chosen depends upon the application.

[SOURCE: IEC 60050-161:1990, 161-08-05, modified – Note to entry 1 has been modified.]

3.1.38
voltage swell
sudden increase of voltage at a point in an electrical system followed by voltage reduction after a short period of time from a few cycles to a few seconds

3.1.39
voltage unbalance
condition in a polyphase system in which the RMS values of the phase element voltages (fundamental component), or the phase angles between consecutive phase element voltages, are not all equal

Note 1 to entry: The degree of the inequality is usually expressed as the ratios of the negative- and zero-sequence component to the positive-sequence component.

AVA Documents
Document Sharing Hub

Full document details: PD IEC TS 62786-1:2023