PD IEC TS 63106-1:2020

BSI Standards Publication

Simulators used for testing of photovoltaic power conversion equipment — Recommendations

Part 1: AC power simulators

Documents
Document Sharing Hub

Full document details: PD IEC TS 63106-1:2020

National foreword

This Published Document is the UK implementation of IEC TS 63106-1:2020.

The UK participation in its preparation was entrusted to Technical Committee GEL/82, Photovoltaic Energy Systems.

A list of organizations represented on this committee can be obtained on request to its committee manager.

This publication does not purport to include all the necessary provisions of a contract. Users are responsible for its correct application.

© The British Standards Institution 2020
Published by BSI Standards Limited 2020

ISBN 978 0 580 97395 6

ICS 27.160

Compliance with a British Standard cannot confer immunity from legal obligations.

This Published Document was published under the authority of the Standards Policy and Strategy Committee on 30 November 2020.

Amendments/corrigenda issued since publication

Date	Text affected

Documents
Document Sharing Hub

Full document details: PD IEC TS 63106-1:2020

IEC TS 63106-1

Edition 1.0 2020-11

TECHNICAL SPECIFICATION

Simulators used for testing of photovoltaic power conversion equipment – Recommendations – Part 1: AC power simulators

INTERNATIONAL
ELECTROTECHNICAL
COMMISSION

ICS 27.160

ISBN 978-2-8322-9035-4

Warning! Make sure that you obtained this publication from an authorized distributor.

® Registered trademark of the International Electrotechnical Commission

Documents
Document Sharing Hub

Full document details: PD IEC TS 63106-1:2020

CONTENTS

FOREWORD 4
INTRODUCTION 6
1 Scope 7
2 Normative references 7
3 Terms, definitions and abbreviated terms 7
4 PCE types with respect to AC voltage levels and grid interconnection 9
5 Test setup for utility interactive PCEs 10
5.1 General 10
5.2 Test setup examples for utility interaction test 11
5.2.1 General 11
5.2.2 Types of AC power simulator systems 11
5.2.3 Load 12
5.2.4 Line impedance 13
6 General recommendations for AC power simulators 13
6.1 General 13
6.1.1 Overview 13
6.1.2 AC main connections 13
6.1.3 Output transformer 13
6.1.4 Number of phases and voltage range 13
6.1.5 Frequency ranges supplied to EUT 14
6.1.6 Voltage stability and accuracy 14
6.1.7 Frequency stability and accuracy 14
6.1.8 AC output voltage harmonic distortion 14
6.1.9 Signal interface for hardware in the loop 15
6.1.10 Durability against impulse test voltage 15
6.1.11 Other requirements for test properties 15
6.2 AC power simulator performance and characteristics 15
Bibliography 38

Figure 1 – Examples of ports 8
Figure 2 – Example of connection of DG systems to utility grid 10
Figure 3 – Examples of fundamental setup of EUT test system 11

Table 1 – Typical maximum harmonic voltage distortion (as per IEC 61000-4-7:2002) 14
Table 2 – Grid qualification/Requalification – In-range voltage before connection/reconnection 16
Table 3 – Grid qualification/Requalification – In-range frequency before connection/reconnection 17
Table 4 – Power capability: Nameplate P, Q, S under normal and near-normal grid conditions 18
Table 5 – Power capability: Limitation of P/Q/S/PF by setpoint 19
Table 6 – Power capability: Ramp rate or soft start time-developing magnitude by set rate 20
Table 7 – Grid protection tests – AC over-voltage (OV) and under-voltage (UV) trip tests 21

AVA Documents
Document Sharing Hub

Full document details: PD IEC TS 63106-1:2020

Table 8 – Grid protection tests: OF/UF trips 22
Table 9 – Grid protection tests: Anti-islanding 23
Table 10 – Grid protection tests: ROCOF trips 24
Table 11 – Grid protection tests: Open phase 25
Table 12 – Power quality tests: Current harmonics, inter-harmonics, THDi 26
Table 13 – Power quality tests: Flicker (continuous) 27
Table 14 – Power quality tests: Current inrush (at connection switch close) 28
Table 15 – Power quality tests: Current imbalance 29
Table 16 – Power quality tests: Transient OV on load dump 30
Table 17 – Grid support tests: UV/OV ride-through with/without Iq injection 31
Table 18 – Grid support tests: UF/OF ride-through 32
Table 19 – Grid support tests: ROCOF ride-through 33
Table 20 – Grid support tests: Phase-jump ride-through 34
Table 21 – Grid support tests: P (f), PF (P, V), Q (V), P (V) 35
Table 22 – External command response tests: Magnitude accuracy for P/Q/S/PF by setpoint 36
Table 23 – External command response tests: Response to external setpoint changes (response time, settling time) 37

Documents
Document Sharing Hub

Full document details: PD IEC TS 63106-1:2020

INTERNATIONAL ELECTROTECHNICAL COMMISSION

SIMULATORS USED FOR TESTING OF PHOTOVOLTAIC POWER CONVERSION EQUIPMENT – RECOMMENDATIONS –

Part 1: AC power simulators

FOREWORD

1) The International Electrotechnical Commission (IEC) is a worldwide organization for standardization comprising all national electrotechnical committees (IEC National Committees). The object of IEC is to promote international co-operation on all questions concerning standardization in the electrical and electronic fields. To this end and in addition to other activities, IEC publishes International Standards, Technical Specifications, Technical Reports, Publicly Available Specifications (PAS) and Guides (hereafter referred to as "IEC Publication(s)"). Their preparation is entrusted to technical committees; any IEC National Committee interested in the subject dealt with may participate in this preparatory work. International, governmental and non-governmental organizations liaising with the IEC also participate in this preparation. IEC collaborates closely with the International Organization for Standardization (ISO) in accordance with conditions determined by agreement between the two organizations.
2) The formal decisions or agreements of IEC on technical matters express, as nearly as possible, an international consensus of opinion on the relevant subjects since each technical committee has representation from all interested IEC National Committees.
3) IEC Publications have the form of recommendations for international use and are accepted by IEC National Committees in that sense. While all reasonable efforts are made to ensure that the technical content of IEC Publications is accurate, IEC cannot be held responsible for the way in which they are used or for any misinterpretation by any end user.
4) In order to promote international uniformity, IEC National Committees undertake to apply IEC Publications transparently to the maximum extent possible in their national and regional publications. Any divergence between any IEC Publication and the corresponding national or regional publication shall be clearly indicated in the latter.
5) IEC itself does not provide any attestation of conformity. Independent certification bodies provide conformity assessment services and, in some areas, access to IEC marks of conformity. IEC is not responsible for any services carried out by independent certification bodies.
6) All users should ensure that they have the latest edition of this publication.
7) No liability shall attach to IEC or its directors, employees, servants or agents including individual experts and members of its technical committees and IEC National Committees for any personal injury, property damage or other damage of any nature whatsoever, whether direct or indirect, or for costs (including legal fees) and expenses arising out of the publication, use of, or reliance upon, this IEC Publication or any other IEC Publications.
8) Attention is drawn to the Normative references cited in this publication. Use of the referenced publications is indispensable for the correct application of this publication.
9) Attention is drawn to the possibility that some of the elements of this IEC Publication may be the subject of patent rights. IEC shall not be held responsible for identifying any or all such patent rights.

The main task of IEC technical committees is to prepare International Standards. In exceptional circumstances, a technical committee may propose the publication of a Technical Specification when

- the required support cannot be obtained for the publication of an International Standard, despite repeated efforts, or
- the subject is still under technical development or where, for any other reason, there is the future but no immediate possibility of an agreement on an International Standard.

Technical Specifications are subject to review within three years of publication to decide whether they can be transformed into International Standards.

IEC TS 63106-1, which is a Technical Specification, has been prepared by IEC technical committee 82: Solar photovoltaic energy systems.

Documents
Document Sharing Hub

Full document details: PD IEC TS 63106-1:2020

The text of this Technical Specifications based on the following documents:

Draft TS	Report on voting
82/1731/DTS	82/1776A/RVDTS

Full information on the voting for the approval of this Technical Specification can be found in the report on voting indicated in the above table.

This document has been drafted in accordance with the ISO/IEC Directives, Part 2.

A list of all parts in the IEC 63106 series, published under the general title *Simulators used for testing of photovoltaic power conversion equipment – Recommendations*, can be found on the IEC web site.

The committee has decided that the contents of this document will remain unchanged until the stability date indicated on the IEC website under "http://webstore.iec.ch" in the data related to the specific document. At this date, the document will be

- reconfirmed,
- withdrawn,
- replaced by a revised edition, or
- amended.

Documents
Document Sharing Hub

Full document details: PD IEC TS 63106-1:2020

INTRODUCTION

The objective of this document is to establish terminology, and create a framework for, and provide guidance regarding the electrical performance of AC power simulators used to test utility interactive photovoltaic (PV) power conversion equipment (PCE) for compliance with grid interconnection standards.

It serves as a generalized guideline for the development of AC power simulators used within a test and evaluation system for PV PCEs.

Testing laboratories are responsible for selecting the appropriate test items and procedures as well as defining the required performance for adequate evaluation of utility interactive PV PCEs, considering utility power requirements, local codes and regulations.

Utility interactive PCEs are used not only for PV, but also for various distributed generation technologies such as wind power, battery energy storage, engine co-generation or fuel cells. Some of the recommendations in this document may be similar and applicable for AC simulators used to test these other generation technologies, but they are not intended to supersede testing requirements found in related IEC standards.

This document may be used in conjunction with regional or national grid standards and codes, such as:

a) European level utility interaction requirements such as:

   EN 50549-1:2019,

   EN 50549-2:2019.

b) German FGW TG3.

c) UL1741 supplement SA, SRD-UL-1741-SA-V1.1.

d) IEEE 1547-2003, IEEE1547a (Amendment 1) -2014 and IEEE1547.1-2005.

e) IEEE 1547-2018 and IEEE 1547.1-2020.

Documents
Document Sharing Hub

Full document details: PD IEC TS 63106-1:2020

SIMULATORS USED FOR TESTING OF PHOTOVOLTAIC POWER CONVERSION EQUIPMENT – RECOMMENDATIONS –

Part 1: AC power simulators

1 Scope

The purpose of this part of IEC 63106 is to provide recommendations for Low Voltage (LV) AC power simulators used for testing utility interactive photovoltaic power conversion equipment (PCE).

NOTE Low Voltage refers to 1 000 Va.c. and less.

The AC power simulators connect to the AC output power port of a PCE under test and simulate the utility grid by generating comparable AC voltage.

The AC power simulators can be used to test a PCE's utility interaction characteristics, including protection, ride through, immunity and power quality. The requirements and procedures are specified in IEC standards and local utility grid requirements, selected by the network operator, utility, or authority having jurisdiction.

2 Normative references

The following documents are referred to in the text in such a way that some or all of their content constitutes recommendations of this document. For dated references, only the edition cited applies. For undated references, the latest edition of the referenced document (including any amendments) applies.

IEC 61000-4-7:2002, *Electromagnetic compatibility (EMC) – Part 4-7: Testing and measurement techniques – General guide on harmonics and interharmonics measurements and :instrumentation, for power supply systems and equipment connected thereto*
IEC 61000-4-7:2002/AMD1:2008

IEC TS 61836:2016, *Solar photovoltaic energy systems – Terms, definitions and symbols*

IEC TS 62910:2020, *Utility-interconnected photovoltaic inverters – Test procedure for under voltage ride-through measurements*

IEC TS 63106-2, *Simulators used for testing of photovoltaic power conversion equipment – recommendations – Part 2: DC power simulators*

IEC TS 63217:–[1], *Utility-interconnected photovoltaic (PV) inverters – Test procedure of high-voltage ride-through measurements*

3 Terms, definitions and abbreviated terms

For the purposes of this document, the terms and definitions given in IEC TS 61836 and the following apply.

[1] Under preparation. Stage at the time of publication: ACD.

Documents
Document Sharing Hub

Full document details: PD IEC TS 63106-1:2020

ISO and IEC maintain terminological databases for use in standardization at the following addresses:

- IEC Electropedia: available at http://www.electropedia.org/
- ISO Online browsing platform: available at http://www.iso.org/obp

3.1
AC power simulator
system or device able to source and/or absorb AC power, for use in testing of PCE

Note 1 to entry: This document includes a real utility grid, where appropriate, as well as synthetic sources as rotating machines or power converters.

3.2
power conversion equipment
PCE
electrical device converting one form of electrical power to another form of electrical power with respect to voltage, current, frequency, phase and the number of phases

[SOURCE: IEC 62109-1:2010, 3.66]

3.3
port
particular interface of the PCE with external circuits

Note 1 to entry: see Figure 1 for examples of ports.

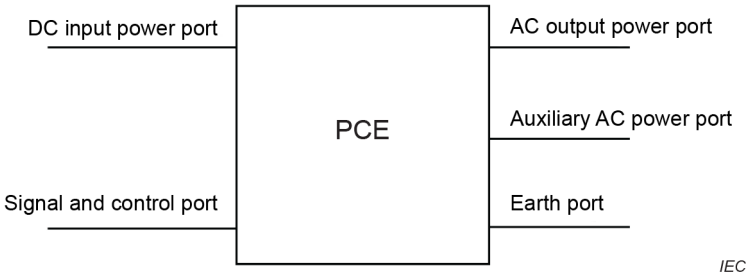

Figure 1 – Examples of ports

3.4
equipment under test
EUT
PCE that is tested by connecting and supplying DC and AC power to each port

3.5
AC output power port
port used to connect to a public low voltage AC mains power distribution network or other low voltage AC mains installation

3.6
DC input power port
port used to connect the PCE to a low voltage DC photovoltaic power generating sub-system

3.7
distributed generation
DG
decentralized power generation system that is connected to the utility grid in a distributed manner

Documents
Document Sharing Hub
Full document details: PD IEC TS 63106-1:2020

3.8
low voltage
LV
set of voltage levels used for the distribution of electricity

[SOURCE: IEC 60050-601:1985, 601-01-26, modified to delete upper limit voltage]

3.9
high voltage
HV
set of upper voltage levels used in power system for bulk transmission of electricity

[SOURCE: IEC 60050-601:1985, 601-01-27]

3.10
medium voltage
MV
any set of voltage levels lying between low and high voltage

[SOURCE: IEC 60050-601:1985, 601-01-28]

3.11
type test
conformity test made on one or more items representative of the production

[SOURCE: IEC 60050-151:2001, 151-16-16]

3.12
OVRT
over voltage ride through for utility failure durability of operation

3.13
UVRT
under voltage ride through for utility failure durability of operation

3.14
OFRT
over frequency ride through for utility failure durability of operation

3.15
UFRT
under frequency ride through for utility failure durability of operation

3.16
ROCOF
rate of change of power system frequency in Hz/s in the transient period

4 PCE types with respect to AC voltage levels and grid interconnection

In this document, utility interconnected voltage or capacity categories are not specified. PCE based DG may be connected to the utility in any of the voltage ranges described below:

a) High voltage transmission or sub-transmission line connection.

b) Medium voltage distribution line connection.

c) Low voltage distribution line connection, including PCEs for residential use and micro inverter or module integrated electronics.

AVA Documents
Document Sharing Hub

Figure 2 shows examples of DG systems connected to the utility grid.

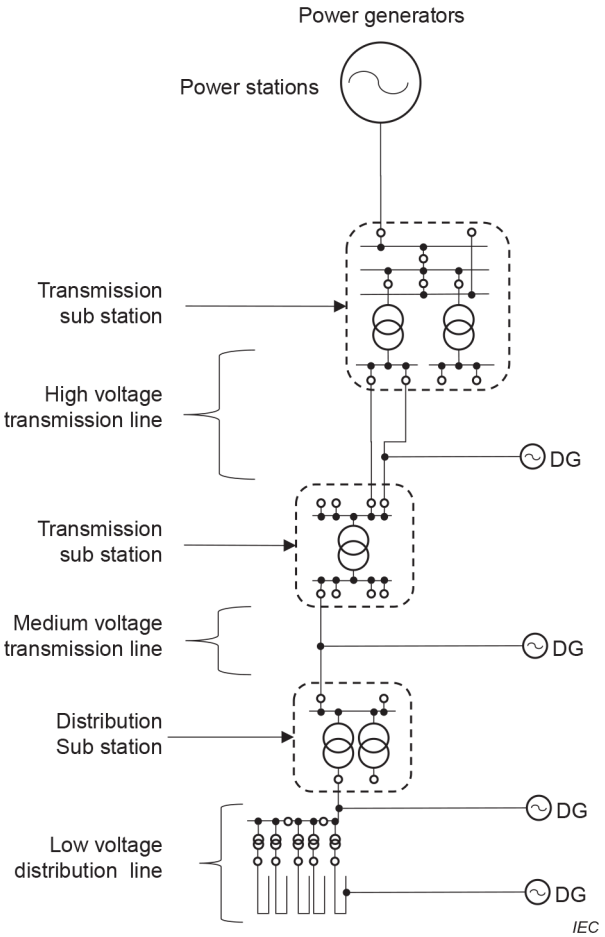

Figure 2 – Example of connection of DG systems to utility grid

Utility-interactive PCEs typically have AC voltage outputs in the range of 100 V to 1 000 V, determined by the input DC voltage window of the PCE or the input voltage from a DC/DC converter. Connections to the utility grid at higher voltages require the use of step-up transformers. Therefore, an upper limit of 1 000 Va.c. for the AC voltage range of a PCE test system is sufficient.

5 Test setup for utility interactive PCEs

5.1 General

In order to realize valid and reproducible testing, the AC power source shall be appropriate for the test being performed. This may mean utilizing an actual power grid, an AC power generator or an electronic AC power simulator depending on the needs of the specific test under consideration. In this document, recommendations of AC power simulators for a wide range of typical utility interconnection tests are described.

Similarly, the DC power source shall be appropriate for the test being performed. This may mean utilizing an actual PV array output, a conventional power supply, or an electronic PV power simulator depending on the needs of the specific test under consideration. Recommendations for DC power simulators are addressed in IEC TS 63106-2.

NOTE Hardware in the loop (HIL) or software to control the voltage and frequency at the EUT output port point by detecting output power (active and reactive) and calculating the voltage and frequency or phase properties by given utility network model with simulated generators and line impedances are discussed and developed. They are not used for type certification tests but still have potential usefulness in the future for testing the performance of multiple DGs in combination with a smart grid.

AVA Documents Document Sharing Hub

Full document details: PD IEC TS 63106-1:2020

5.2 Test setup examples for utility interaction test

5.2.1 General

The test system shall be able to simulate steady state and transient utility grid conditions with respect to AC voltage, frequency, line impedance, load, and other conditions as required for the testing. Figure 3 illustrates basic configuration examples for the EUT test system. Here, EUT is the utility interactive PV PCE under test. A DC power simulator is connected to the DC input power port. An AC power simulator is connected to the AC output power port, with other optional impedance and load equipment.

Figure 3 shows only the main power line connections to DC port, AC port in both sides. An earth line may be shared between DC side and AC side devices.

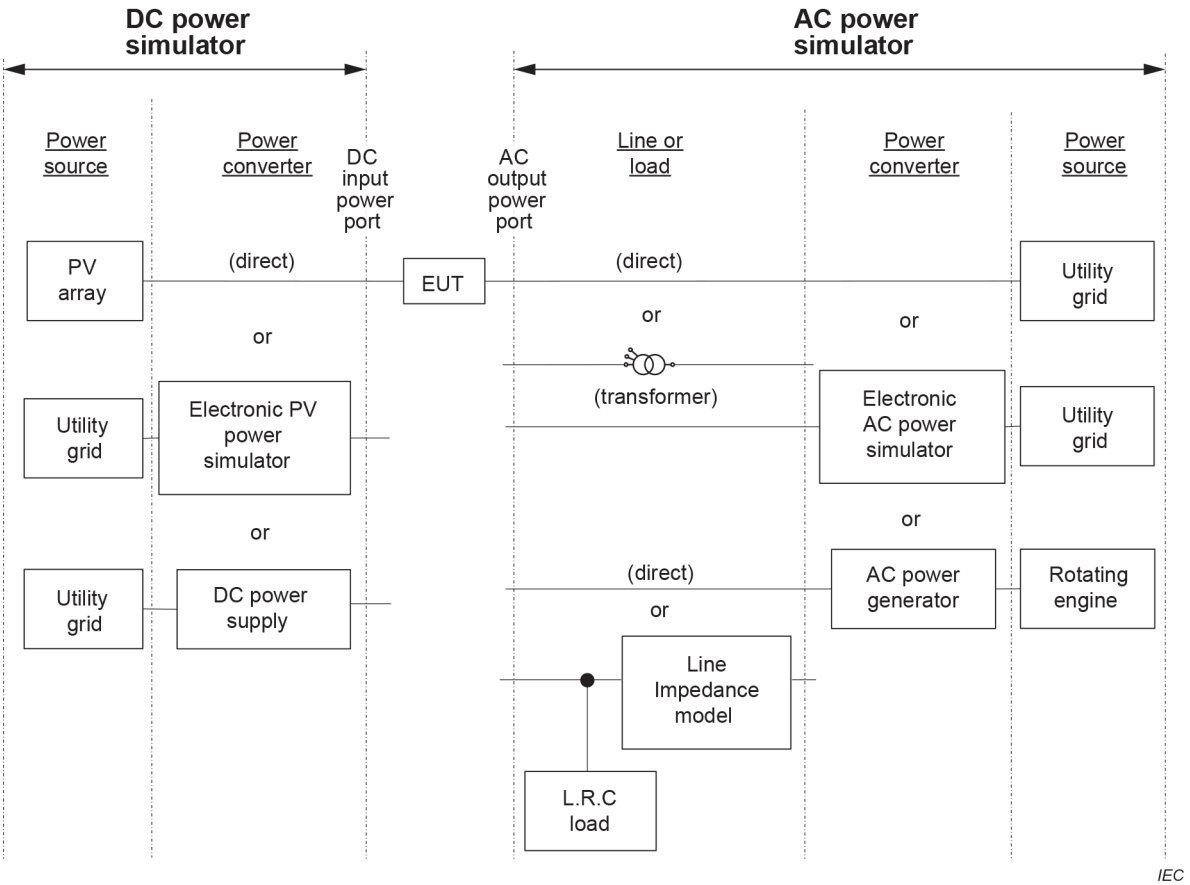

Figure 3 – Examples of fundamental setup of EUT test system

5.2.2 Types of AC power simulator systems

5.2.2.1 General

AC power simulator systems may consist of one or more of the following types of equipment: in 5.2.2 through 5.2.4. Other approaches are possible depending on the test(s) under consideration. As different tests have different power simulator needs, it may be required or optional for a facility to have more than one type of AC power simulator.

The internal resistance of an AC power simulator including connections to the EUT so measured at the EUT AC output power port should be designed referring the real-world distribution and transmission line impedance, for attaining the reasonable test result for power qualities, as harmonics, DC injection, or flicker tests.

Documents
Document Sharing Hub
Full document details: PD IEC TS 63106-1:2020