PD ISO/PAS 13146:2024

BSI Standards Publication

Road vehicles — Brake lining friction materials — Drag mode friction test for hydraulic and pneumatic vehicle brakes

Documents
Document Sharing Hub

Full document details: PD ISO/PAS 13146:2024

National foreword

This Published Document is the UK implementation of ISO/PAS 13146:2024.

The UK participation in its preparation was entrusted to Technical Committee AUE/15, Safety related to vehicles.

A list of organizations represented on this committee can be obtained on request to its committee manager.

Contractual and legal considerations

This publication has been prepared in good faith, however no representation, warranty, assurance or undertaking (express or implied) is or will be made, and no responsibility or liability is or will be accepted by BSI in relation to the adequacy, accuracy, completeness or reasonableness of this publication. All and any such responsibility and liability is expressly disclaimed to the full extent permitted by the law.

This publication is provided as is, and is to be used at the recipient's own risk.

The recipient is advised to consider seeking professional guidance with respect to its use of this publication.

This publication is not intended to constitute a contract. Users are responsible for its correct application.

This publication is not to be regarded as a British Standard.

© The British Standards Institution 2024
Published by BSI Standards Limited 2024

ISBN 978 0 539 21779 7

ICS 43.040.40

Compliance with a Published Document cannot confer immunity from legal obligations.

This Published Document was published under the authority of the Standards Policy and Strategy Committee on 30 November 2024.

Amendments/corrigenda issued since publication

Date	Text affected

Documents
Document Sharing Hub

Full document details: PD ISO/PAS 13146:2024

Publicly Available Specification

ISO/PAS 13146

First edition
2024-11

Road vehicles — Brake lining friction materials — Drag mode friction test for hydraulic and pneumatic vehicle brakes

Véhicules routiers — Matériaux de friction des garnitures de freins — Essai de frottement pour les freins hydrauliques et pneumatiques de véhicules

Reference number
ISO/PAS 13146:2024(en)

© ISO 2024

Documents
Document Sharing Hub

Full document details: PD ISO/PAS 13146:2024

COPYRIGHT PROTECTED DOCUMENT

© ISO 2024

All rights reserved. Unless otherwise specified, or required in the context of its implementation, no part of this publication may be reproduced or utilized otherwise in any form or by any means, electronic or mechanical, including photocopying, or posting on the internet or an intranet, without prior written permission. Permission can be requested from either ISO at the address below or ISO's member body in the country of the requester.

ISO copyright office
CP 401 • Ch. de Blandonnet 8
CH-1214 Vernier, Geneva
Phone: +41 22 749 01 11
Email: copyright@iso.org
Website: www.iso.org

Published in Switzerland

Documents
Document Sharing Hub
Full document details: PD ISO/PAS 13146:2024

Contents

Page

Foreword ... **iv**
Introduction ... **v**
1 Scope ... **1**
2 Normative references ... **1**
3 Terms and definitions ... **1**
4 Symbols ... **2**
5 Test conditions ... **2**
5.1 Test equipment and parts ... 2
5.2 Requirement ... 2
5.3 Brake temperature measurement ... 3
6 Test type ... **4**
7 Method A: Brake lining assemblies for vehicles of categories M_1, M_2, N_1, O_1, O_2 and L ... **4**
7.1 General ... 4
7.2 Determination of test pressure and torque ... 4
7.2.1 Determination of test pressure and torque of the original sample method ... 4
7.2.2 Determination of test pressure and torque of the sampling method ... 5
7.3 Brake rotor and brake caliper conditions ... 5
7.4 Sample preparation ... 5
7.4.1 Sample preparation of the original sample method ... 5
7.4.2 Sample preparation of the sampling method ... 6
7.5 Thickness and mass measurement ... 6
7.6 Test procedure ... 6
7.6.1 Test procedure 1: Constant torque mode ... 6
7.6.2 Test procedure 2: Constant pressure mode ... 7
7.7 Evaluation of test results ... 8
7.7.1 General ... 8
7.7.2 Cold coefficients of friction and coefficients of friction during normal operation ... 8
7.7.3 Minimum, maximum and fading coefficients of friction ... 10
8 Method B: Rotor and drum brake lining assemblies for vehicles of categories M_3, N_2, N_3, O_3 and O_4 ... **12**
8.1 General ... 12
8.2 Determination of test pressure for sampling method ... 13
8.3 Brake rotor and brake caliper conditions for the sampling method ... 13
8.4 Sample preparation ... 13
8.5 Thickness and mass measurement ... 13
8.6 Test procedure ... 13
8.7 Evaluation of test results ... 14
9 Test report ... **15**
Annex A (normative) **Test bench** ... **16**
Annex B (informative) **Effective friction radius (r_{eff})** ... **17**
Annex C (normative) **Brake torque** ... **18**
Annex D (informative) **Templates** ... **29**

© ISO 2024 – All rights reserved

Documents
Document Sharing Hub
Full document details: PD ISO/PAS 13146:2024

Foreword

ISO (the International Organization for Standardization) is a worldwide federation of national standards bodies (ISO member bodies). The work of preparing International Standards is normally carried out through ISO technical committees. Each member body interested in a subject for which a technical committee has been established has the right to be represented on that committee. International organizations, governmental and non-governmental, in liaison with ISO, also take part in the work. ISO collaborates closely with the International Electrotechnical Commission (IEC) on all matters of electrotechnical standardization.

The procedures used to develop this document and those intended for its further maintenance are described in the ISO/IEC Directives, Part 1. In particular, the different approval criteria needed for the different types of ISO document should be noted. This document was drafted in accordance with the editorial rules of the ISO/IEC Directives, Part 2 (see www.iso.org/directives).

ISO draws attention to the possibility that the implementation of this document may involve the use of (a) patent(s). ISO takes no position concerning the evidence, validity or applicability of any claimed patent rights in respect thereof. As of the date of publication of this document, ISO had not received notice of (a) patent(s) which may be required to implement this document. However, implementers are cautioned that this may not represent the latest information, which may be obtained from the patent database available at www.iso.org/patents. ISO shall not be held responsible for identifying any or all such patent rights.

Any trade name used in this document is information given for the convenience of users and does not constitute an endorsement.

For an explanation of the voluntary nature of standards, the meaning of ISO specific terms and expressions related to conformity assessment, as well as information about ISO's adherence to the World Trade Organization (WTO) principles in the Technical Barriers to Trade (TBT), see www.iso.org/iso/foreword.html.

This document was prepared by Technical Committee ISO/TC 22, *Road vehicles*, Subcommittee SC 33, *Vehicle dynamics, chassis components and driving automation systems testing*.

Any feedback or questions on this document should be directed to the user's national standards body. A complete listing of these bodies can be found at www.iso.org/members.html.

© ISO 2024 – All rights reserved

Documents
Document Sharing Hub
Full document details: PD ISO/PAS 13146:2024

Introduction

Assessing friction performance is a primary concern when developing friction materials and conducting quality control. The brake assembly simulation test plays an important role here. However, the dyno test is not adapted to all vehicle models and brakes, and the assembly test is expensive and time-consuming. Therefore, a test method that can simulate real working conditions while only targeting friction materials is needed for the quality control of friction materials.

There are two ways to evaluate the friction performance of vehicle friction materials. One is through constant speed dragging, and the other is deceleration braking. The constant speed dragging braking mode can be used for the small sample test and assembly test. This braking mode is similar to actual driving conditions, brake system characteristics and automotive vehicle dynamics.

This document proposes a constant speed dragging test procedure for vehicle friction materials, which is used to evaluate the consistency of the performance of friction materials. Users assess and report on the test result according to their own specific requirements, such as friction levels or brake lining or rotor wear.

This test procedure has the following characteristics.

— The test data is comparable to the full-size assembly test.

— The test results can be used to compare friction materials.

— The test method is used to test the performance of friction materials. The test can be applied to raw material screening, early product development, process quality control and sample testing. The test is also an important means to test product consistency and quality control.

— The test method is made more efficient by using full-size brake linings, calipers and rotors. It is less expensive than testing on a full-size dynamometer test bench.

© ISO 2024 – All rights reserved

Documents
Document Sharing Hub
Full document details: PD ISO/PAS 13146:2024

Documents
Document Sharing Hub

Road vehicles — Brake lining friction materials — Drag mode friction test for hydraulic and pneumatic vehicle brakes

1 Scope

This document specifies a method for the drag mode friction test for hydraulic and pneumatic vehicle brakes.

This document is applicable to the friction performance test of brake linings used in vehicles of categories M, N, O, and L.

2 Normative references

The following documents are referred to in the text in such a way that some or all of their content constitutes requirements of this document. For dated references, only the edition cited applies. For undated references, the latest edition of the referenced document (including any amendments) applies.

ISO 611, *Road vehicles — Braking of automotive vehicles and their trailers — Vocabulary*

3 Terms and definitions

For the purposes of this document, the terms and definitions given in ISO 611 and the following apply.

ISO and IEC maintain terminology databases for use in standardization at the following addresses:

— ISO Online browsing platform: available at https://www.iso.org/obp

— IEC Electropedia: available at https://www.electropedia.org/

3.1
cycle
braking process consisting of several brake applications

Note 1 to entry: Each braking cycle consists of several brake applications or brake manoeuvres.

Note 2 to entry: Each individual braking manoeuvre consists of a 5 s application of the brake followed by a 10 s brake release.

3.2
constant torque mode
control mode for maintaining constant braking torque during braking process

3.3
constant pressure mode
control mode for maintaining constant line pressure during braking process

© ISO 2024 – All rights reserved

Documents
Document Sharing Hub
Full document details: PD ISO/PAS 13146:2024

4 Symbols

Table 1 — Symbols, definitions and units

Symbol	Definition	Unit
A_k	area of caliper piston(s)	cm^2
A_{BS}	radiating surface of brake rotor(s)	m^2
c_p	specific heat storage capacity	J/(N K)
g	gravity acceleration	m/s^2
G_{BS}	weight of brake rotor; $G_{BS} = m_{BS}\,g$	N
m_{BS}	mass of rotor	kg
M_d, M_1, M_2, M_3	torque	N m
n	speed	r min^{-1}
P	applied pressure	MPa
r_{eff}	brake effective radius	mm
t	time	s
$T_{Initial}$	initial temperature	°C
T_{end}	final temperature	°C
T_E	final temperature	K
T_A	start temperature	K
α	transmission coefficient	J/(m^2 s K)
η	efficiency	—
μ	friction coefficient	—
μ_F	fading coefficient of friction	—
μ_K	cold coefficient of friction	—
μ_{max}	maximum coefficient of friction	—
μ_{min}	minimum coefficient of friction	—
μ_{op}	operational coefficient of friction	—

5 Test conditions

5.1 Test equipment and parts

The test shall be conducted using a test bench with appropriate hardware and software as specified in Annex A.

A suitable fixture shall be used to mount the brake caliper on the test bench so that the brake caliper and the brake rotor stay in position. The effective friction radius is adjusted according either to the requester specification or to Annex B.

Before starting the test, the entire system, including the brake caliper, shall be adequately bled. Assembling the caliper shall not interfere with the torque measurement.

5.2 Requirement

New brake linings from current production shall be used. For pads with a surface coating, the coating shall be removed before assembling the test configuration. The brake caliper and rotor to be used shall be as specified by the test requester.

New brake rotors shall be thoroughly cleansed to remove any corrosion protection coatings. The brake rotor may be reused until the minimum thickness specified by the manufacturer is reached. In the absence of a specification, discard the rotor when it reaches 90 % of the wearable thickness.

© ISO 2024 – All rights reserved

Documents
Document Sharing Hub
Full document details: PD ISO/PAS 13146:2024

Before each test, the surface of the brake rotor shall be cleaned with sandpaper to remove wear marks and rust from the surface. Dust and oil on the surface of the brake rotor should be removed with a soft cloth or anhydrous ethanol.

Recondition a new or reworked brake rotor by conducting at least one complete test programme with the same friction material intended for the tests. Do not include these conditioning tests as part of the report. It is recommended to use a single rotor for each lining material. The same applies to every re-use of the rotor after a period in storage.

Replace the brake rotor when the torque variations exceed ±5 % of the set value or the surface roughness exceeds 15 µm. Measure roughness in the radial direction in the middle of the friction ring at three or more equally spaced angular positions.

On calipers with integral parking brakes, remove the mechanical parking brake actuation (spindle) to minimize efficiency loss and to simplify the retraction of the piston when changing a pad.

When a vehicle has several variants of brake rotors for a given brake pad number, use the variant with the highest (most critical) ratio of kinetic energy to rotor mass.

5.3 Brake temperature measurement

The temperature is measured at the outboard side of the rotor by means of an embedded (caulked) thermocouple, in the friction effective radius (see Annex B) it is measured at the surface of a thermocouple pressed in by a copper pin. For alternative temperature measurement methods, the fixed thermocouple is the reference sensor:

— in the case of ventilated brake rotors in the outer friction ring, located at 0,5 mm below friction surface (see Figure 1);

— in the case of solid brake rotors half way up the friction ring thickness (see Figure 2).

After demonstrating that the alternative temperature measurement method is comparable to the standard thermocouple installation, an infrared or rubbing thermocouple measurement methods can be used. Aim for a measurement position as close as possible to the equivalent thermocouple. Record the measurement position in the comparison test report. The rotor runout shall be measured when the brake rotor is mounted on the test bench. The maximum permissible rotor runout is 0,08 mm.

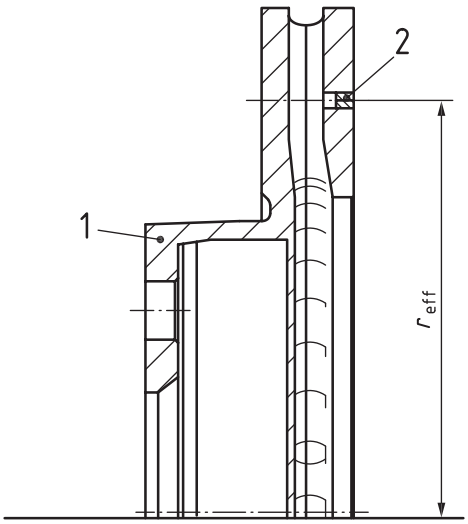

Key

1 brake rotor

2 thermocouple

r_{eff} brake effective radius

Figure 1 — Example of a ventilated brake rotor

© ISO 2024 – All rights reserved

Documents
Document Sharing Hub
Full document details: PD ISO/PAS 13146:2024

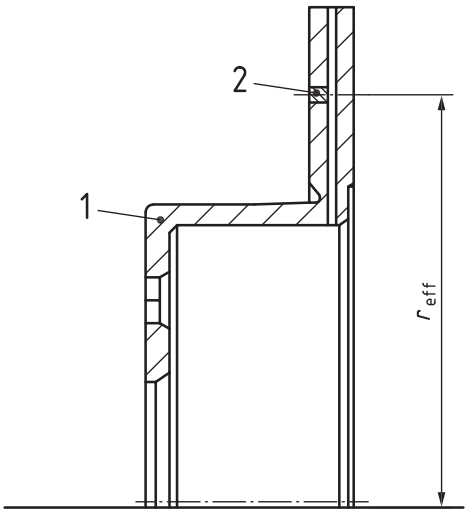

Key

1 brake rotor

2 thermocouple

r_{eff} brake effective radius

Figure 2 — Example of a solid brake rotor

6 Test type

The two test types are the original sample method and the sampling method. The original sample method is used to test the original size of the sample (the original brake lining). The sampling method is used to shrink a brake lining to a specified size to be tested in a standardized brake application.

Brake lining assemblies for vehicles of categories M, N, O and L can be tested using either the original sample method or the sampling method.

7 Method A: Brake lining assemblies for vehicles of categories M_1, M_2, N_1, O_1, O_2 and L

7.1 General

For this category of vehicles, the test types are the original method and the sampling method.

7.2 Determination of test pressure and torque

7.2.1 Determination of test pressure and torque of the original sample method

7.2.1.1 Determination of test pressure

The hydraulic pressure, P, under the piston(s) of the caliper shall be constant when calculated using Formula (1):

$$P = \frac{M_d}{0{,}57 \cdot r_w \cdot A_k} \tag{1}$$

© ISO 2024 – All rights reserved

Documents
Document Sharing Hub
Full document details: PD ISO/PAS 13146:2024