PD ISO/TR 10064-1:2017

BSI Standards Publication

Code of inspection practice

Part 1: Measurement of cylindrical gear tooth flanks

Documents
Document Sharing Hub

Full document details: PD ISO/TR 10064-1:2017

National foreword

This Published Document is the UK implementation of ISO/TR 10064-1:2017. It supersedes BS ISO TR 10064-1:1992, which is withdrawn.

The UK participation in its preparation was entrusted to Technical Committee MCE/5/-/2, Gear accuracy.

A list of organizations represented on this committee can be obtained on request to its secretary.

This publication does not purport to include all the necessary provisions of a contract. Users are responsible for its correct application.

© The British Standards Institution 2017
Published by BSI Standards Limited 2017

ISBN 978 0 580 92924 3

ICS 21.200

Compliance with a British Standard cannot confer immunity from legal obligations.

This Published Document was published under the authority of the Standards Policy and Strategy Committee on 30 September 2017.

Amendments/corrigenda issued since publication

Date	Text affected

Documents
Document Sharing Hub

Full document details: PD ISO/TR 10064-1:2017

TECHNICAL REPORT

ISO/TR 10064-1

Second edition
2017-07

Code of inspection practice —

Part 1: Measurement of cylindrical gear tooth flanks

Code pratique de réception —

Partie 1: Mesure des flancs dentaires cylindriques

Reference number
ISO/TR 10064-1:2017(E)

Documents
Document Sharing Hub

© ISO 2017

Full document details: PD ISO/TR 10064-1:2017

COPYRIGHT PROTECTED DOCUMENT

© ISO 2017, Published in Switzerland

All rights reserved. Unless otherwise specified, no part of this publication may be reproduced or utilized otherwise in any form or by any means, electronic or mechanical, including photocopying, or posting on the internet or an intranet, without prior written permission. Permission can be requested from either ISO at the address below or ISO's member body in the country of the requester.

ISO copyright office
Ch. de Blandonnet 8 • CP 401
CH-1214 Vernier, Geneva, Switzerland
Tel. +41 22 749 01 11
Fax +41 22 749 09 47
copyright@iso.org
www.iso.org

© ISO 2017 – All rights reserved

Documents
Document Sharing Hub

Full document details: PD ISO/TR 10064-1:2017

Contents

Page

Foreword ... **vi**

1 Scope ... **1**

2 Normative references ... **1**

3 Terms, definitions, symbols and abbreviated terms ... **1**

4 General considerations ... **5**
4.1 Background ... 5
4.2 Required inspection information ... 5
4.3 Measurement selection ... 5
4.3.1 Substitution of measurement methods ... 5
4.3.2 First piece inspection ... 5
4.3.3 Sampling and statistical process control ... 5

5 Conventions and measurement positions ... **6**
5.1 General ... 6
5.2 Datum axis ... 6
5.3 Left or right flank ... 6
5.4 Left hand or right hand helical gears ... 7
5.5 Numbering of teeth and flanks ... 7
5.6 Numbering of pitches ... 8
5.7 Number of pitches "***k***" in a deviation symbol subscript ... 8

6 Types of measuring equipment and principle ... **8**
6.1 General ... 8
6.2 Measurement methods ... 14
6.2.1 Generative measurement methods ... 14
6.2.2 Non-generative measurement methods ... 16
6.2.3 Pitch measurement methods ... 17
6.2.4 Hand-held pitch measuring devices ... 18
6.2.5 Radial runout measurement ... 20
6.2.6 Computer tomography methods for small gears ... 21
6.2.7 Optical devices for small spur gears ... 21
6.3 Calibration of equipment ... 22
6.4 Tooth thickness, differences between CNC/CMM and manual measurement ... 22
6.5 "In-process" gear measurement on manufacturing machines ... 23
6.6 Gear mounting ... 23
6.7 Example output format from a CNC GMM ... 24
6.7.1 General ... 24
6.7.2 Example evaluations of modified helices and profiles ... 27

7 Recommended measurement procedure and good measurement practice ... **28**
7.1 Measurement procedure ... 28
7.2 Probe problems when measuring aluminium parts ... 30
7.3 Suitable artefacts for calibration of measuring machines ... 30

8 Inspection procedures for gears that are too large for gear inspection machines ... **31**
8.1 General ... 31
8.2 Profile inspection using portable device ... 31
8.2.1 Disassembly of segments ... 31
8.2.2 Measurement by portable gear inspection device using coordinates ... 31
8.2.3 Profile inspection by gear tooth caliper ... 32
8.3 Inspection of helix form deviation ... 36
8.3.1 Inspection of helix form deviation on the gear cutting machine ... 36
8.3.2 Straightness inspection using a cylinder ... 37
8.3.3 Inspection of the tooth contact pattern ... 37
8.4 Inspection of the pitch ... 38
8.4.1 Calculation of pitch ... 38

© ISO 2017 – All rights reserved

AVA Documents
Document Sharing Hub

Full document details: PD ISO/TR 10064-1:2017

8.4.2 Inspection using an automatic device on the cutting machine: inspection of the single circular pitch and the cumulative pitch deviation ... 38
8.4.3 Manual inspection: inspection of base pitch, p_b, and base pitch deviations, f_{pb} ... 39
8.5 Measuring tooth thickness ... 39
8.6 Measuring gear radial runout and axial runout of reference surfaces ... 39

9 Measurement analysis — Profile, helix, pitch and radial runout ... 39
9.1 Profile ... 39
9.1.1 Profile deviation ... 39
9.1.2 Profile deviation diagram ... 40
9.1.3 Evaluation of profile diagrams ... 41
9.1.4 Algebraic signs of $f_{H\alpha}$, f_b and f_α ... 42
9.1.5 Mean profile slope deviation, $f_{H\alpha m}$ ... 42
9.2 Helix ... 43
9.2.1 General ... 43
9.2.2 Helix deviation diagram ... 44
9.2.3 Evaluation of helix diagrams ... 45
9.2.4 Algebraic signs of $f_{H\beta}$ and f_β ... 46
9.2.5 Machine corrections based on mean helix slope deviation, $f_{H\beta m}$ ... 47
9.3 Pitch ... 48
9.3.1 Pitch deviation ... 48
9.3.2 Pitch deviation measurement ... 48
9.3.3 Relationships of pitch parameters and measuring methods ... 48
9.3.4 Calculation of cumulative pitch (index), F_p ... 49
9.3.5 Calculation of single pitch, f_{pi} ... 50
9.3.6 Calculation of total cumulative pitch deviation, F_p ... 50
9.3.7 Calculation of sector pitch deviation, F_{pk} ... 50
9.3.8 Segment gear measurement ... 50
9.4 Radial runout, determining eccentricity ... 51
9.4.1 Measuring principle ... 51
9.4.2 Evaluation of measurement ... 51

10 Interpretation of profile, helix, pitch and radial runout results ... 52
10.1 Interpreting measurement results ... 52
10.2 Procedure for interpreting measurement results ... 52
10.3 Recognition of common manufacturing errors ... 53
10.3.1 General ... 53
10.3.2 Example of a profile with pressure angle deviation ... 53
10.3.3 Example of profile deviations with varying pressure angle deviation ... 53
10.3.4 Hob runout or shaping cutter deflection ... 54
10.3.5 Consistent mean helix slope deviation ... 55
10.3.6 Helix slope variation ... 55
10.3.7 Profile control diameter not achieved ... 56
10.3.8 Variation in profile non-clean up and profile control diameter not achieved ... 56
10.3.9 Pitch results with radial runout of the gear blank ... 58
10.3.10 Pitch with indexing deviations ... 58
10.3.11 Pitch with repeating deviation patterns that may cause noise ... 61

11 Single flank composite testing ... 61
11.1 Single flank composite testing principle ... 61
11.2 Single flank composite test ... 62
11.2.1 Single flank test setup ... 62
11.2.2 Single flank composite deviations ... 64
11.3 Single flank measurement with master gear ... 65
11.3.1 Master gear requirements ... 65
11.3.2 Influence of profile deviations ... 65
11.3.3 Influence of pitch deviations ... 66
11.3.4 Influence of helix deviations ... 66
11.4 Single flank measurement of product gear pair ... 69
11.4.1 Differences between tests with a master gear and between two product gears ... 69

© ISO 2017 – All rights reserved
AVA Documents Document Sharing Hub
Full document details: PD ISO/TR 10064-1:2017

11.4.2 Identification and location of defects ... 69
11.4.3 Selective meshing of gears ... 69
11.5 Data analysis by the Fourier transform method ... 70

12 Additional measurements ... 71
12.1 Flank measurements ... 71
12.1.1 General ... 71
12.1.2 Twist measurement ... 71
12.1.3 Topographical measurement ... 72
12.1.4 Undulations ... 73
12.2 Surface roughness measurement ... 74
12.3 Tooth root fillet radius measurement ... 74

13 Filters and data density ... 75
13.1 General ... 75
13.2 Examples of filtered results ... 75
13.3 Working principle of the Gauss 50 % filter ... 75
13.4 Filter limitations ... 81

14 Additional calculations ... 81
14.1 Calculation of single pitch deviation, f_{pt}, from normal base pitch measurements ... 81
14.2 Additional calculations for normal base pitch measurements ... 82
14.2.1 Included parameters ... 82
14.2.2 Calculation of normal base pitch deviation, f_{pbn} ... 82
14.2.3 Calculation of mean normal base pitch deviation, f_{pbnm} ... 82
14.3 Additional calculations for profile measurements ... 82
14.3.1 Included parameters ... 82
14.3.2 Mean base diameter deviation and mean pressure angle deviation ... 83
14.3.3 Calculation of effective base diameter, $d_{b\ eff}$ ... 84
14.3.4 Calculation of effective transverse pressure angle, $\alpha_{t\ eff}$ ... 84
14.3.5 Calculation of effective normal pressure angle, $\alpha_{n\ eff}$ ... 84
14.3.6 Calculation of mean transverse pressure angle deviation, $f_{\alpha mt}$ ... 85
14.3.7 Calculation of mean normal pressure angle deviation, $f_{\alpha mn}$ ... 85
14.4 Additional calculations for helix measurements ... 85
14.4.1 Included parameters ... 85
14.4.2 Required preliminary data ... 86
14.4.3 Calculation of effective helix angle at the measurement diameter, $\beta_{M\ eff}$ ... 86
14.4.4 Calculation of effective lead, $p_{z\ eff}$ ... 86
14.4.5 Calculation of effective helix angle at the standard pitch diameter, β_{eff} ... 87
14.4.6 Calculation of mean lead deviation, f_{pzm} ... 87
14.4.7 Calculation of mean helix angle deviation, $f_{\beta m}$ ... 87

Bibliography ... 89

© ISO 2017 – All rights reserved

Documents
Document Sharing Hub
Full document details: PD ISO/TR 10064-1:2017

Foreword

ISO (the International Organization for Standardization) is a worldwide federation of national standards bodies (ISO member bodies). The work of preparing International Standards is normally carried out through ISO technical committees. Each member body interested in a subject for which a technical committee has been established has the right to be represented on that committee. International organizations, governmental and non-governmental, in liaison with ISO, also take part in the work. ISO collaborates closely with the International Electrotechnical Commission (IEC) on all matters of electrotechnical standardization.

The procedures used to develop this document and those intended for its further maintenance are described in the ISO/IEC Directives, Part 1. In particular the different approval criteria needed for the different types of ISO documents should be noted. This document was drafted in accordance with the editorial rules of the ISO/IEC Directives, Part 2 (see www.iso.org/directives).

Attention is drawn to the possibility that some of the elements of this document may be the subject of patent rights. ISO shall not be held responsible for identifying any or all such patent rights. Details of any patent rights identified during the development of the document will be in the Introduction and/or on the ISO list of patent declarations received (see www.iso.org/patents).

Any trade name used in this document is information given for the convenience of users and does not constitute an endorsement.

For an explanation on the voluntary nature of standards, the meaning of ISO specific terms and expressions related to conformity assessment, as well as information about ISO's adherence to the World Trade Organization (WTO) principles in the Technical Barriers to Trade (TBT) see the following URL: www.iso.org/iso/foreword.html.

This document was prepared by ISO/TC 60, *Gears*.

This second edition cancels and replaces the first edition (ISO/TR 10064-1:1992), which has been technically revised. It also incorporates the Technical Corrigendum ISO/TR 10064-1:1992/Cor. 1:2006.

The following changes have been made:

— the contents have been updated to correspond with ISO 1328-1:2013;

— additional material has been added on the proper setup and use of measuring machines, and how the measurement results can be used to determine the corrective steps needed to improve the gear tooth flank tolerance class.

A list of all parts in the ISO/TR 10064 series can be found on the ISO website.

© ISO 2017 – All rights reserved
Documents
Document Sharing Hub
Full document details: PD ISO/TR 10064-1:2017

Code of inspection practice —

Part 1: Measurement of cylindrical gear tooth flanks

1 Scope

This document supplements ISO 1328-1:2013. It provides a code of practice dealing with measurements on flanks of individual cylindrical involute gears, i.e. with the measurement of pitch, profile, helix and tangential composite characteristics. It describes measuring equipment, provides advice for gear measuring methods and for the analysis of measurement results, and discusses the interpretation of results.

Measurements using a double flank tester are not included (see ISO/TR 10064-2). This document only applies to involute gears.

2 Normative references

There are no normative references in this document.

3 Terms, definitions, symbols and abbreviated terms

For the purposes of this document, the following terms, definitions, symbols and abbreviated terms apply.

ISO and IEC maintain terminological databases for use in standardization at the following addresses:

— IEC Electropedia: available at http://www.electropedia.org/

— ISO Online browsing platform: available at http://www.iso.org/obp

NOTE The symbols and terms used throughout this document are in basic agreement with the symbols and terms given in ISO 701 and in ISO 1122-1. In all cases, the first time that each symbol is introduced, it is defined and discussed in detail. See Table 1. Abbreviated terms are given in Table 2.

Table 1 — Symbols and definitions

Symbols[a]	Definition	Units	First use
a	tip point	—	Figure 31
b	face width	mm	Figure 37
C_f	profile control point	—	Figure 31
d	reference diameter	mm	Formula (4)
d_a	tip diameter	mm	14.3.2.1
$d_{a\,eff}$	effective (measured) tip diameter	mm	Figure 29
d_b	base diameter	mm	Formula (6)
$d_{b\,eff}$	effective base diameter	mm	14.2

[a] Symbols used for deviations of individual element measurements from specified values are composed of lower case letters "f" with subscripts (exceptions include f_e, f_1 and f_2) whereas symbols used for "cumulative" or "total" deviations, which represent combinations of several individual element deviations, are composed of capital letters "F" also with subscripts. It is necessary to qualify some deviations with an algebraic sign. A deviation is positive when, for example, a dimension is larger than optimum and negative when smaller than optimum.

[b] These deviations can be + (plus) or – (minus).

© ISO 2017 – All rights reserved

Documents Document Sharing Hub
Full document details: PD ISO/TR 10064-1:2017

Table 1 *(continued)*

Symbols[a]	Definition	Units	First use
d_M	measurement diameter	mm	6.2.3.2
d_{Nf}	start of active profile (SAP) diameter	mm	Formula (8)
d_y	individual inspection diameter (measurement diameter)	mm	Figure 29
F_a	tip form point (where tip break starts)	—	Figure 31
F_{is}	total single flank composite deviation	µm	11.1
F_p	total cumulative pitch deviation	µm	9.3.1
F_{pi}	individual total cumulative pitch deviation	µm	9.3.8
F_{pk}	sector pitch deviation over *k* pitches	µm	9.3.7
F_r	radial runout	µm	6.2.5
F_α	total profile deviation	µm	Figure 14
F_β	total helix deviation	µm	Figure 37
f_α	difference between the actual and nominal pressure angle	degrees	9.1.4
$f_{\alpha m}$	mean pressure angle deviation	degrees	14.3.1
f_b	base circle deviation (difference between the actual and nominal base diameter)	mm	9.1.4
f_{bm}	mean base diameter deviation	mm	14.3.1
f_e	eccentricity between gear axis and axis of gear teeth	µm	Figure 34
$f_{f\alpha}$	profile form deviation	µm	Figure 14
$f_{f\beta}$	helix form deviation	µm	Figure 37
$f_{f\beta T}$	helix form tolerance	µm	8.3.1
$f_{H\alpha}$	profile slope deviation[b]	µm	Figure 14
$f_{H\alpha m}$	mean profile slope deviation[b]	µm	9.1.5
$f_{H\alpha i}$	individual profile slope deviation[b]	µm	9.1.5
$f_{H\beta}$	helix slope deviation[b]	µm	6.4
$f_{H\beta i}$	individual helix slope deviation[b]	µm	9.2.5
$f_{H\beta m}$	mean helix slope deviation[b]	µm	9.2.5
$f_{H\beta mt}$	mean helix slope deviation, in the transverse plane and tangent to the measurement diameter[b]	µm	Formula (37)
$f_{i'}$	tooth-to-tooth single flank composite deviation without removal of the long term component	µm	11.2.2
f_{is}	tooth-to-tooth single flank composite deviation after removal of long term component	µm	11.1
$f_{l'}$	variance of the long period component over one revolution	µm	11.2.2
f_p	single pitch deviation[b]	µm	8.4.3
f_{pzm}	mean lead deviation[b]	mm	14.4.1
f_{pbnm}	mean normal base pitch deviation[b]	µm	14.2.1
f_{pbn}	normal base pitch deviation[b]	µm	6.2.4
f_{pbni}	individual normal base pitch deviation[b]	µm	14.1
f_{pb}	single pitch deviation[b], normal base	µm	8.4.3
f_{pbt}	single pitch deviation[b], transverse base	µm	Formula (19)

[a] Symbols used for deviations of individual element measurements from specified values are composed of lower case letters "*f*" with subscripts (exceptions include f_e, f_1 and f_2) whereas symbols used for "cumulative" or "total" deviations, which represent combinations of several individual element deviations, are composed of capital letters "*F*" also with subscripts. It is necessary to qualify some deviations with an algebraic sign. A deviation is positive when, for example, a dimension is larger than optimum and negative when smaller than optimum.

[b] These deviations can be + (plus) or − (minus).

© ISO 2017 – All rights reserved
Documents
Document Sharing Hub
Full document details: PD ISO/TR 10064-1:2017

Table 1 *(continued)*

Symbols[a]	Definition	Units	First use
f_{pi}	individual single pitch deviation[b]	µm	Figure 42
f_{p2i}	individual double pitch deviation[b]	µm	9.3.8
f_{ui}	individual adjacent pitch difference[b]	µm	9.3.8
f_{u2i}	individual adjacent double pitch difference[b]	µm	9.3.8
$f_{w\alpha}$	undulation wave height in profile direction	µm	Figure 74
$f_{w\beta}$	undulation wave height in helix direction	µm	Figure 74
f_{α}	pressure angle deviation[b]	degrees	9.1.4
$f_{\alpha mn}$	mean normal pressure angle deviation[b]	degrees	14.2.1
$f_{\alpha mt}$	mean transverse pressure angle deviation[b]	degrees	14.2.1
f_{β}	helix angle deviation[b]	degrees	9.2.4
$f_{\beta m}$	mean helix angle deviation[b]	degrees	9.2.4
g_{α}	length of path of contact	mm	Figure 65
h_{cy}	chordal addendum to an individual measurement diameter	mm	Figure 29
h_{y}	radial distance from tip to an individual measurement diameter	mm	Figure 29
k	number of pitches in a sector	—	5.7
L	left flank	—	5.3
L_{α}	profile evaluation length	mm	Figure 14
$L_{\alpha c}$	functional profile length	mm	14.3.2.2
$L_{\alpha e}$	base tangent length to start of active profile	mm	Figure 14
L_{β}	helix evaluation length	mm	8.3.1
l	left hand helix	—	5.4
m_{n}	normal module	mm	Formula (1)
N	pitch number	—	5.6
N_{f}	start of active profile point on line of action	—	Figure 31
n	number of deviation values included in the mean	—	9.1.5
p_{b}	base pitch	mm	8.4.3
p_{bn}	normal base pitch	mm	Formula (1)
p_{bt}	transverse base pitch	mm	Formula (16)
p_{m}	true position pitch[b]	µm	14.1
p_{z}	lead of the helix	mm	Formula (36)
$p_{z\,eff}$	effective lead	mm	14.4.1
R	right flank	—	5.3
r	right hand helix	—	5.4
s	undulation weighting factor	mm	Figure 80
s_{cy}	chordal tooth thickness at an individual inspection diameter	mm	Figure 29
s_{n}	normal circular tooth thickness at the reference diameter	mm	Formula (12)
s_{yn}	normal circular tooth thickness at an individual inspection diameter	mm	Figure 29
z	number of teeth	—	6.2.3.2
z_{M}	number of teeth in master indexing worm wheel	—	Formula (22)

[a] Symbols used for deviations of individual element measurements from specified values are composed of lower case letters "f" with subscripts (exceptions include f_e, f_1 and f_2) whereas symbols used for "cumulative" or "total" deviations, which represent combinations of several individual element deviations, are composed of capital letters "F" also with subscripts. It is necessary to qualify some deviations with an algebraic sign. A deviation is positive when, for example, a dimension is larger than optimum and negative when smaller than optimum.

[b] These deviations can be + (plus) or – (minus).

© ISO 2017 – All rights reserved

Documents
Document Sharing Hub
Full document details: PD ISO/TR 10064-1:2017

Table 1 *(continued)*

Symbols[a]	Definition	Units	First use
z_1	number of teeth on driving gear	—	Figure 61
z_2	number of teeth on driven gear	—	Figure 61
$\alpha_{50\,\%}$	Gauss parameter	—	Formula (24)
α_{Mt}	transverse pressure angle at the measurement diameter	degrees	10.3.9
α_n	normal pressure angle	degrees	Formula (1)
$\alpha_{n\,eff}$	effective normal pressure angle	degrees	14.2.1
α_t	transverse pressure angle	degrees	Formula (5)
$\alpha_{t\,eff}$	effective transverse pressure angle	degrees	14.2.1
α_{yn}	normal pressure angle at an individual inspection diameter	degrees	8.2.3
α_{yt}	transverse pressure angle at an individual inspection diameter	degrees	Formula (11)
α_{Mt}	transverse pressure angle at measurement diameter	degrees	10.3.9
β	helix angle	degrees	Formula (4)
β_b	base helix angle	degrees	Formula (17)
β_{eff}	effective helix angle at the standard pitch diameter	degrees	14.4.1
$\beta_{M\,eff}$	effective helix angle at the measurement diameter	degrees	14.4.1
β_y	helix angle at an individual inspection diameter	degrees	Formula (10)
ε_γ	total contact ratio	—	11.3.4.2
λ_g	undulation wavelength	mm	Figure 74
λ_α	undulation wavelength in profile direction	mm	Figure 74
λ_β	undulation wavelength in helix direction	mm	Formula (22)
ξ	involute roll angle	degrees	Figure 14
ξ_a	involute roll angle to the tip diameter	radians	Formula (7)
ξ_{Nf}	involute roll angle to the start of active profile diameter	radians	Formula (8)
ξ_y	individual inspection roll angle	radians	Formula (9)
θ	angular position of gear	radians	Figure 61
$\Delta\theta$	angular gear position deviation	radians	Figure 61
I	reference face	—	5.3
II	non-reference face	—	5.3

[a] Symbols used for deviations of individual element measurements from specified values are composed of lower case letters "*f*" with subscripts (exceptions include f_e, f_1 and f_2) whereas symbols used for "cumulative" or "total" deviations, which represent combinations of several individual element deviations, are composed of capital letters "*F*" also with subscripts. It is necessary to qualify some deviations with an algebraic sign. A deviation is positive when, for example, a dimension is larger than optimum and negative when smaller than optimum.

[b] These deviations can be + (plus) or − (minus).

Table 2 — Abbreviated terms

	Definition	First use
3D	three dimensional	6.2.6
CAD	computer aided design	6.2.6
CMM	coordinate measuring machine	6.1
CNC	computer numerically controlled	6.1
CT	computer tomography	6.2.6
GCM	gear cutting machine	8.3.3
GMM	gear measuring machine	6.1

© ISO 2017 – All rights reserved
Documents
Document Sharing Hub
Full document details: PD ISO/TR 10064-1:2017

4 General considerations

4.1 Background

The purpose of this document is to provide background information that will assist with understanding the requirements, implementation and effectiveness of the gear measurements needed to establish the gear classifications defined in ISO 1328-1. This information will assist those involved in gear design and specification, gear manufacture and gear measurement processes. It includes background information and guidance on good measurement practice and addresses the interpretation of measurement results to identify common causes of gear manufacturing errors. Improved knowledge of gear measurement processes enhances the value of investments in measuring equipment.

When producing multiple identical gears in a large batch, it is rarely necessary or economical to measure all possible deviations on all the gears manufactured. Stable manufacturing processes allow a relatively small number of samples to be measured and still ensure that the required tolerance class is maintained. Certain elements may not significantly influence the function of the gear under consideration. However, some gear manufacturing processes are known to increase the risk of significant variation in tooth geometry in a single gear and thus require additional measurements to verify gear geometry parameter tolerances have been achieved. Some guidance is provided when this is necessary, but it remains the responsibility of the manufacturer of the gears to assure that the gears satisfy the specified requirements, such as those in ISO 1328-1. It is recommended that measuring plans be agreed upon between the manufacturer and the purchaser.

4.2 Required inspection information

All necessary information should be provided to the operator(s) of the measuring equipment. The information required will vary depending on the type of measurement(s). Most measurement processes require basic gear and blank data, such as number of teeth, pressure angle, helix angle, module, tip diameter, root diameter, face width, design profile, design helix, etc. Certain measuring tasks require additional information. For example, to measure profile, the profile control diameter and start of tip break must be provided. Minimum requirements are defined in ISO 1328-1 but it is the responsibility of the gear designer to ensure the specification provides sufficient information for the manufacturer to develop a measurement strategy that is suitable for the subject gears.

4.3 Measurement selection

4.3.1 Substitution of measurement methods

Inspection may be carried out using a number of methods. In some cases, some measurements may be substituted for others. For example, single flank composite measurement may be substituted for pitch measurement, or radial composite measurement may replace radial runout measurement. However, such substitutions may only be done with agreement between the manufacturer and the purchaser. See ISO 1328-1:2013, Table 4.

A number of factors should be considered when selecting the measurements, including the tolerance class required, size of the gear, manufacturing cost, and most important, the application of the product gear.

4.3.2 First piece inspection

It may be possible to verify that the manufacturing process is correct by inspecting only the first piece of a batch, allowing the inherent accuracy of the process to assure subsequent parts meet the required tolerance class.

4.3.3 Sampling and statistical process control

The deviations from the design shape of the gear that result from the manufacturing process are dependent on the production process used. When the process is proven capable of producing the

© ISO 2017 – All rights reserved

Documents
Document Sharing Hub
Full document details: PD ISO/TR 10064-1:2017

required tolerance class (e.g. when using statistical methods), sampling inspection may be utilized. Many factors may influence the sample size and frequency; foremost among these should be the assurance that the required tolerance class of the parts is met.

The variability of the measuring process contributes to the perceived variability of the manufacturing process. For more information, see ISO 22514-7.

To achieve statistical compliance, the manufacturing deviations must be smaller than the specified tolerance. In some cases, for very accurate gears, the use of statistical process control is not possible due to the uncertainty in the measurements.

5 Conventions and measurement positions

5.1 General

When measuring gear teeth, specific reference is made to right flanks, left flanks, pitches, teeth or combinations of these.

5.2 Datum axis

Specification of the design profile, design helix, and design pitch requires definition of an appropriate reference axis of rotation, called the datum axis. It is defined by specification of datum surfaces. See ISO/TR 10064-3.

The datum axis is the reference for measurements and associated tolerances. The location and orientation of the measurement diameter circle are determined by this axis.

Ideally, the surfaces used to construct the datum axis, the surfaces used to locate the gear for manufacturing, and the functional surfaces that define the gear axis of rotation in its final assembly will all be the same. In practice, this is often not the case. For example, shaft type parts are often manufactured and inspected using centres to define the datum axis. In cases where the inspection, manufacturing, and/or functional datum surfaces are different, these surfaces should be coincident with each other to a level of accuracy sufficient to assure the final positioning of the gear is adequately represented during measurement.

When a rotary table is used, the gear being measured should be oriented so that its datum axis is coincident with the axis of rotation of the measuring instrument. In the case of mounting the gear between centres, care should be taken to assure that the mounting arbor, if used, is in good condition, and the centres are clean and concentric with the datum surfaces of the gear. In the case of computer controlled measuring instruments, if the measuring program is capable of mathematically correcting the errors resulting from off axis mounting condition, then it may be possible to mount the gear with some deviation to the instrument's axis of rotation.

5.3 Left or right flank

It is convenient to choose one face of the gear as the reference face and to denote it with the letter "*I*". The other non-reference face might be termed face "*II*".

For an observer looking at the reference face, so that the tooth is seen with its tip uppermost, the right flank is on the right and the left flank is on the left.

Right and left flanks are denoted by the letters "R" and "L", respectively. See Figure 1.

© ISO 2017 – All rights reserved
Documents
Document Sharing Hub
Full document details: PD ISO/TR 10064-1:2017

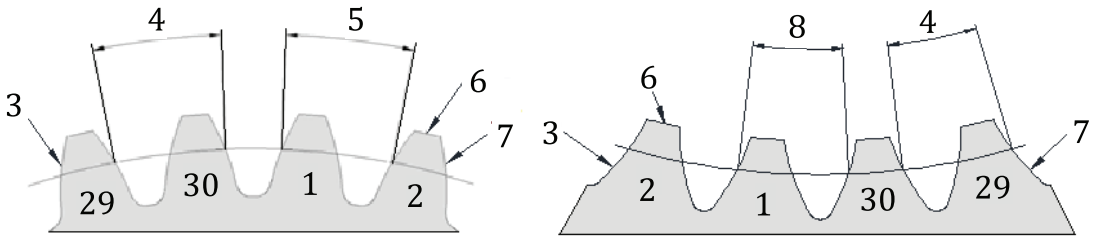

a) External gear **b) Internal gear**

Key

1	Tooth 1	6	tip
2	Tooth 2	7	right flank
3	left flank	8	1L = pitch number 1, left flank
4	30R = pitch number 30, right flank	29	Tooth 29
5	2L = pitch number 2, left flank	30	Tooth 30

Figure 1 — Notation and numbering for external and internal gears

5.4 Left hand or right hand helical gears

The helix of an external or internal helical gear is referred to as being right hand or left hand. The hand of helix is denoted by the letters “r” and “l”, respectively.

The helix is right hand (left hand) if, when looking from one face, the transverse profiles show successive clockwise (counter-clockwise) displacement with increasing distance from an observer. See Figure 2.

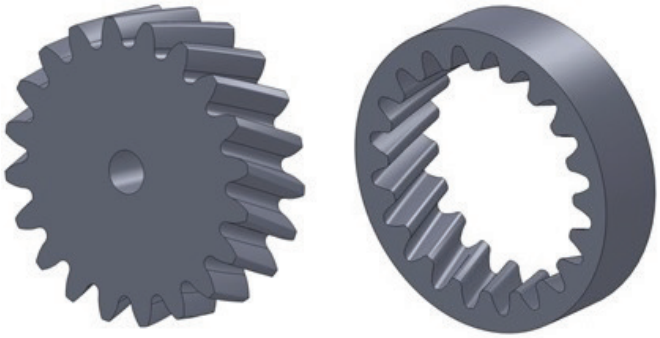

Figure 2 — Right hand gears, external and internal

5.5 Numbering of teeth and flanks

Looking at the reference face of a gear, the teeth are numbered sequentially in the clockwise direction. The tooth number is followed by the letter R or L, indicating whether it is a right or a left flank. For example, “Flank 30 R”. See Figure 1.

© ISO 2017 – All rights reserved

Documents
Document Sharing Hub
Full document details: PD ISO/TR 10064-1:2017

5.6 Numbering of pitches

The numbering of individual pitches is related to tooth numbering as follows: pitch number "*N*" lies between the corresponding flanks of teeth numbers "*N*-1" and "*N*"; with a letter R or L, it is indicated whether the pitch lies between right or left flanks. For example, "Pitch 30 R" (see Figure 1).

NOTE Pitch 1 lies between the last and first tooth. Therefore, sector gears have no pitch 1; they start with pitch number 2.

5.7 Number of pitches "*k*" in a deviation symbol subscript

The subscript "*k*" in a deviation symbol denotes the number of consecutive pitches to which the deviation applies.

In practice, a number is substituted for "*k*", for example, F_{p3} indicates that a given cumulative pitch deviation refers to three pitches.

6 Types of measuring equipment and principle

6.1 General

The analytical measurement of gears, also known as individual or elemental measurement, includes the measurement of helix, profile, pitch, radial runout and tooth thickness deviations. Measurements are made by positioning a contacting probe at the theoretical position where the gear flank should be relative to the datum axis and measuring any deviation. This can be performed by a number of different types of measuring devices including:

— coordinate measuring machines (CMM, with appropriate software), illustrated in Figures 3 and 4;

— traditional mechanical gear measuring machine (GMM), illustrated in Figure 5;

— computer numerically controlled (CNC) gear measuring machines (GMM), illustrated in Figure 6 and 7;

— in-process CNC measuring stations mounted on a machine tool, illustrated in Figure 8;

— portable measuring devices, illustrated in Figures 9, 17 and 18;

— portable gear measuring machines which can be mounted on machine tools or rotary tables to measure pitch and radial runout of the tooth space on large gears, as illustrated in Figures 10 and 11.

NOTE Portable measuring arms typically cannot achieve the same level of uncertainty as can be achieved by other measuring devices.

These methods generally involve scanning the probe over the tooth flank in a continuous manner.

© ISO 2017 – All rights reserved
Documents
Document Sharing Hub
Full document details: PD ISO/TR 10064-1:2017

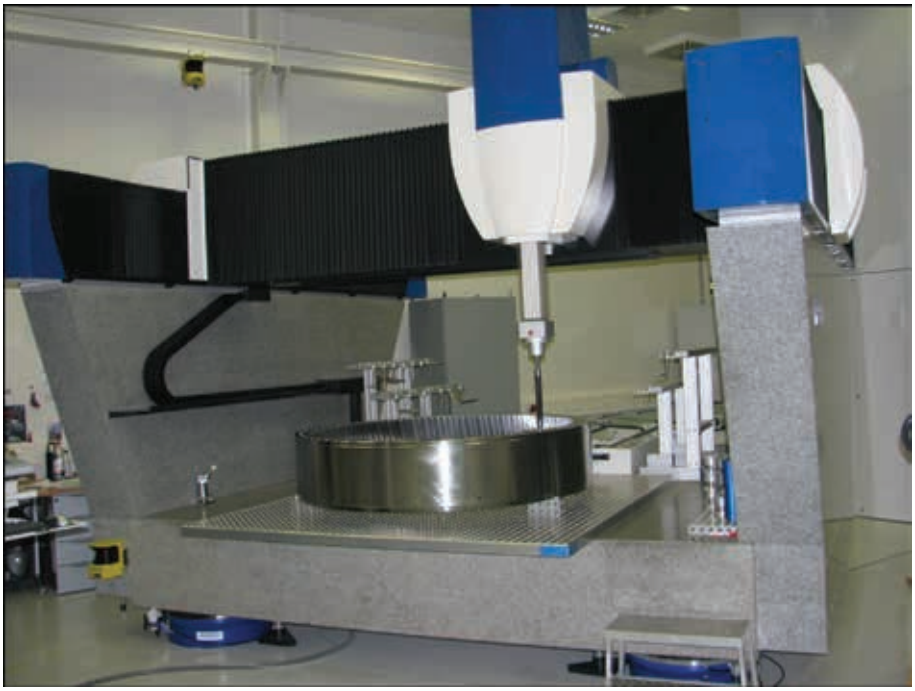

Figure 3 — Large coordinate measuring machine (CMM) used for helix, profile, pitch, radial runout and tooth thickness measurement

Figure 4 — Small CMM used for helix, profile, pitch, radial runout and tooth thickness measurement

© ISO 2017 – All rights reserved

Documents
Document Sharing Hub
Full document details: PD ISO/TR 10064-1:2017

Figure 5 — Traditional GMM mechanical base disc profile and helix measuring machine

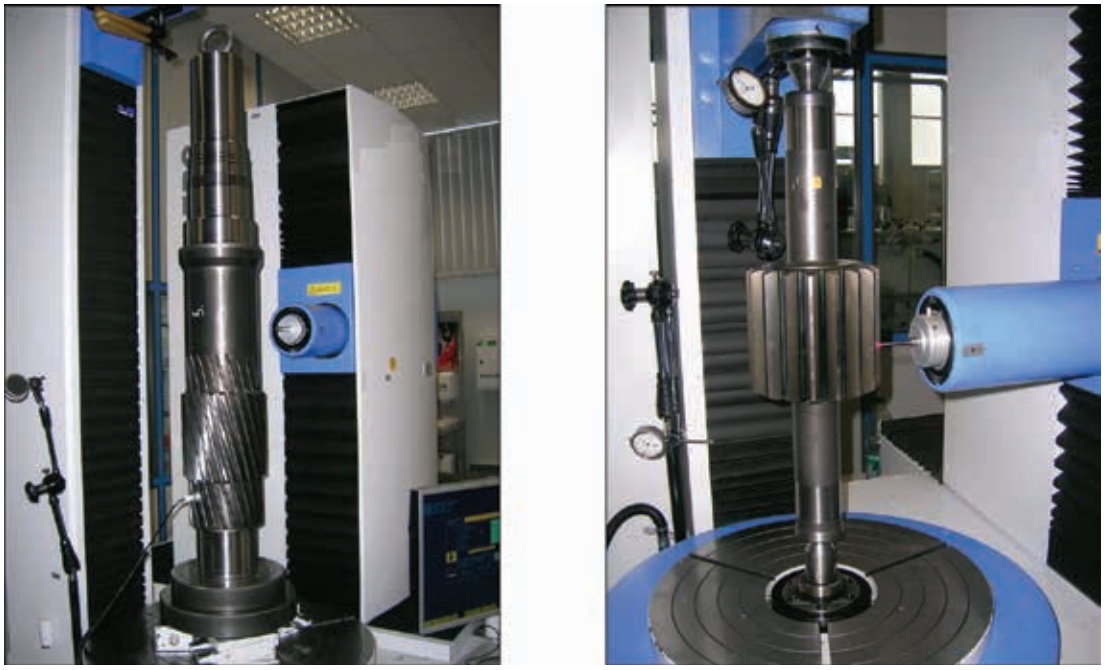

a) Workpiece mounted directly to rotary table **b) Workpiece located between centres on a rotary table**

Figure 6 — CNC GMM using the generative method of measuring profile and helix deviations and the capability to measure pitch, radial runout and tooth thickness

© ISO 2017 – All rights reserved

Documents
Document Sharing Hub

Full document details: PD ISO/TR 10064-1:2017

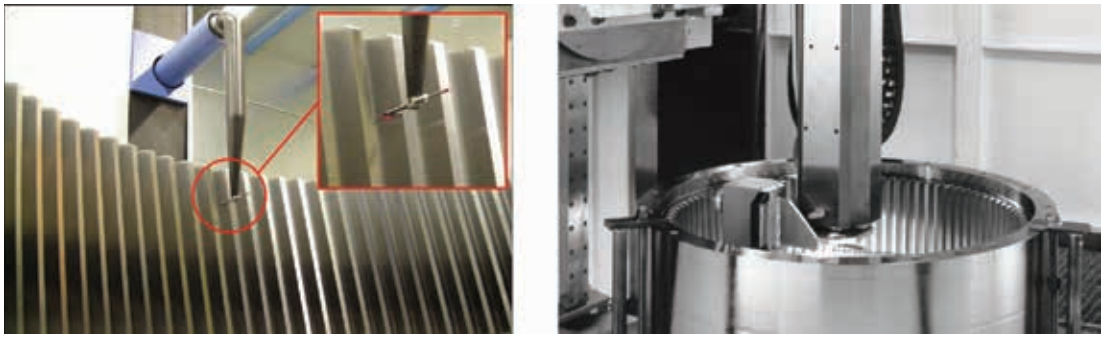

NOTE Profile is measured by scanning in X-Y coordinates only and the rotary table used to position the gear in the correct position for access by the probe.

Figure 7 — Two examples of non-generative internal gear profile measurement on a 4-axis GMM

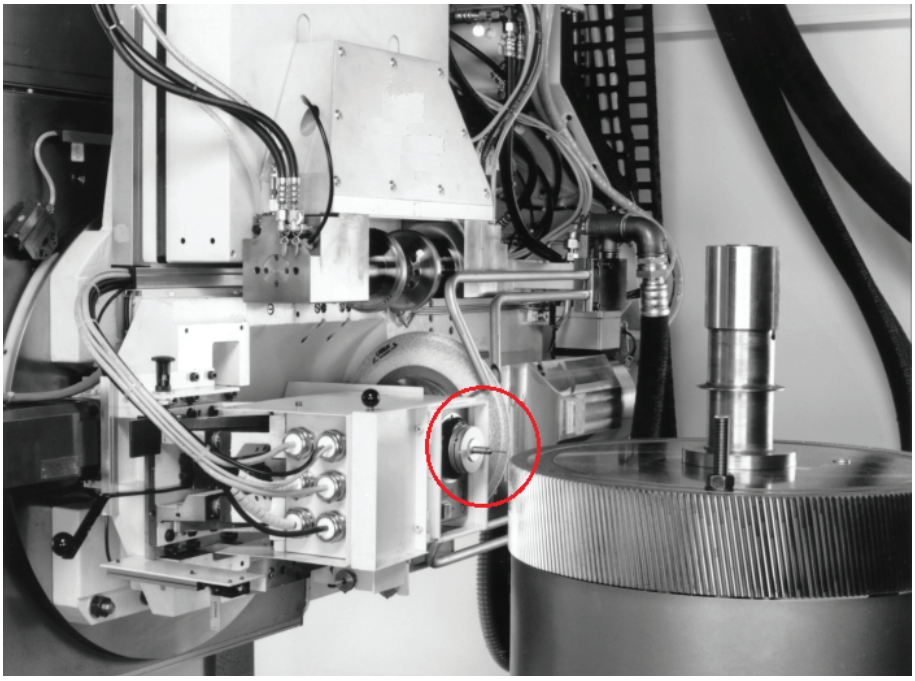

Figure 8 — In-process measurement with a CNC measuring station mounted on a grinding machine

© ISO 2017 – All rights reserved

Documents
Document Sharing Hub
Full document details: PD ISO/TR 10064-1:2017

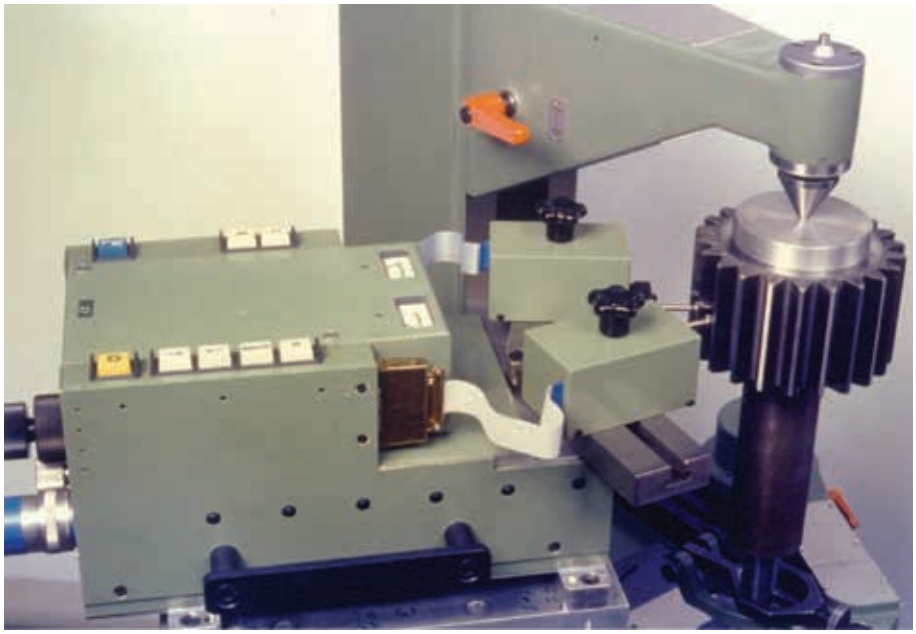

NOTE Commonly used for large gears when independent measuring machines are not available.

Figure 9 — Portable pitch measuring equipment suitable for mounting adjacent to a machine tool rotary table (mounted on a measuring machine in this image)

Figure 10 — Portable measuring arm with gear artefact

© ISO 2017 – All rights reserved
Documents
Document Sharing Hub
Full document details: PD ISO/TR 10064-1:2017

NOTE A laser tracker determines the distance and position of a hand-held device in a local coordinate system. Result is the centre position of the probing tip.

Figure 11 — Measurement of a large gear artefact with a laser instrument

Measuring machines can use two methods for profile and helix, as illustrated in Figure 12.

Generative method: The generative method creates the theoretical involute or helix with a combination of simultaneous rotation of a rotary axis and translation of a linear axis.

Non-generative method: Measurement of the involute and helix by scanning the surface with a three axis measuring machine [usually with three linear (orthogonal) axes but some machines use two linear axes and rotary axis]. Collectively, these can be considered as non-generative profile methods.

GMM that use the generative method for external gears often use a non-generative method for internal gears to minimize the risk from interference of the stylus shaft with the internal tooth tip (see Figure 12, middle sketch). The measurement methods are summarized in Table 3.

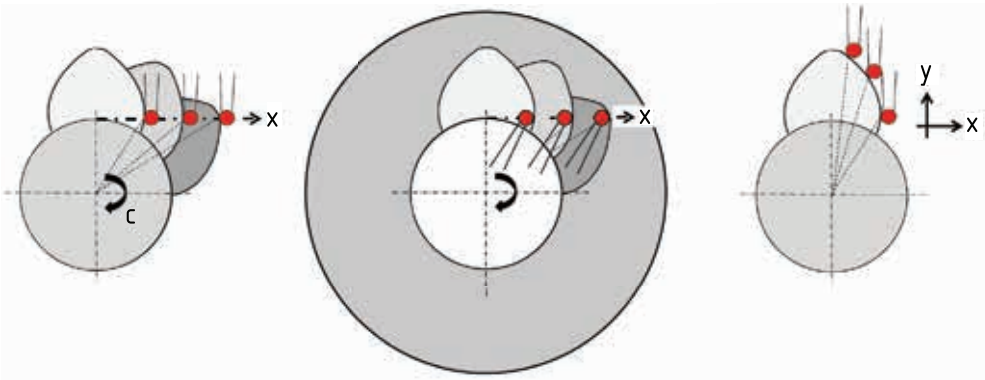

a) Generative profile measurement external gear

b) Generative profile measurement internal gear

c) Coordinate (non-generative) profile measurement

Figure 12 — Profile measurement methods

© ISO 2017 – All rights reserved

Documents
Document Sharing Hub
Full document details: PD ISO/TR 10064-1:2017

Table 3 — Summary of measurement methods

Machine type	Figure for an example	Principle	Internal (I) and/or external (E) gear	Number of axes	Comments
CMM	3 and 4	Non-generative	E and I	3 linear orthogonal	An additional rotary table may be used to minimize the number of measuring probes required.
Traditional mechanical GMM	5	Generative	E and I	3 linear orthogonal and 1 rotary axis	Machines require a base disc (fixed diameter or variable diameter using a mechanism).
CNC GMM	6 and 7	Generative and non-generative	E and I	2 or 3 linear orthogonal and 1 rotary axis	Most use the generative method for profile measurement but at larger diameters, change to non-generative because of either limitations in linear axis length or rotary table encoder accuracy. For internal gears, often, the non-generative method is used since the generative method may have interference with the stylus.
Machine tool based measuring station	8	Non- generative for profile	I and E	2 linear orthogonal and 1 rotary axis	Normally use the machine tool rotary axis as the datum axis.
Portable CMM, including measuring arms	10	Non-generative	E and I	3 axis coordinate system	Generally require an auxiliary datum surface.
Portable dedicated profile measurement	28	Non-generative	E	2 linear axes	Generally locate on the gear teeth themselves and require the measurement of tooth thickness to establish a datum.
Portable pitch measurement	9 and 17	Pitch only	E and I (less common)	1 linear axis and 1 rotary axis	Measures adjacent pitch with a two-probe system and relies on a machine tool rotary table to provide the datum axis. Commonly used for large gears.
Portable base pitch instrument	18	Base pitch only	E and I (less common)	Single axis	Uses the teeth as a datum to measure adjacent base pitch deviation. If set with a reference test piece or gauges, may be used to find mean base pitch deviation.

6.2 Measurement methods

6.2.1 Generative measurement methods

Generative methods measure tooth geometry deviations from a generated theoretical geometry. Involute profile testing involves generating a theoretical involute at the measuring probe with the relative motion of the machine axes. During such tests, the contact points between the stylus and the tooth surface are constrained within the plane of action (base tangent plane, a line tangent to the gear base cylinder used to define the involute profile). See Figures 12 and 13. Generative helix

© ISO 2017 – All rights reserved
Documents
Document Sharing Hub
Full document details: PD ISO/TR 10064-1:2017

testing is carried out according to generation of the theoretical helix. Generative pitch testing involves rotational positioning of the gear according to ideal, equally spaced tooth locations. Profile and pitch measurements take place in the transverse plane, the plane of the involute curve.

On unmodified involute helicoid tooth flanks, the point and angle of contact between the stylus tip and the tooth flank will remain constant during the course of tests carried out according to these generative methods. Contact vector variation and stylus tip sphericity are not significant issues in this case. Although either a spherical or a sharp stylus may be used, a sphere is normally used because it allows the measurement of other features such as datum axis definition and tip and root diameter.

The generative principle was first used in mechanical base disk GMM and is still the preferred method in CNC machines.

The profile results from a generative measurement along the line of action (which is a base tangent line). ISO 1328-1 specifies that measurement points should be uniformly distributed along this line. This is achieved with even increments in roll angle or length of roll. Note that this data spacing requirement means the radial locations of the data are non-linear.

Figure 13 illustrates how the generative measurement principle was applied in the construction of a traditional mechanical gear measuring machine. The base circle disc (which is the same size as the gear base diameter) is located on the machine spindle and the straight edge contacts the disc. The stylus is set on the tangent line of the base circle disc. To measure the involute profile, the stylus generates a theoretical involute by the translation and the resulting rotation of the machine spindle along the base tangent line (without sliding between the disc and the straight edge). Thus, the stylus scans across the profile in the transverse plane. For helix measurement, the vertical movement of the stylus is controlled by the helical guide connected to the machine spindle; it generates a base helix by the rotation of the machine spindle.

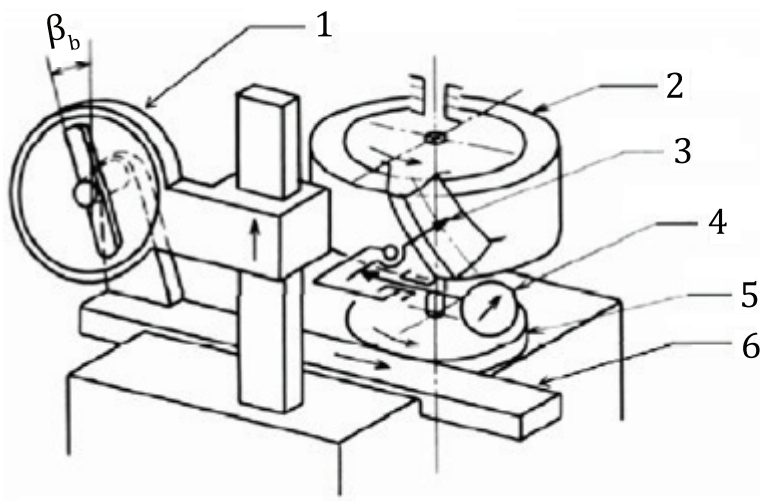

Key

1	helix guide mechanism	4	indicator
2	gear being measured	5	base circle disk
3	stylus	6	straight edge

Figure 13 — Generative helix and profile measuring device

The resulting profile trace is illustrated in Figure 14.

The traditional manual GMM requires three orthogonal linear axes and a rotary axis and thus, CNC GMM that use the generative principle require the same four axes.

© ISO 2017 – All rights reserved

Documents
Document Sharing Hub
Full document details: PD ISO/TR 10064-1:2017

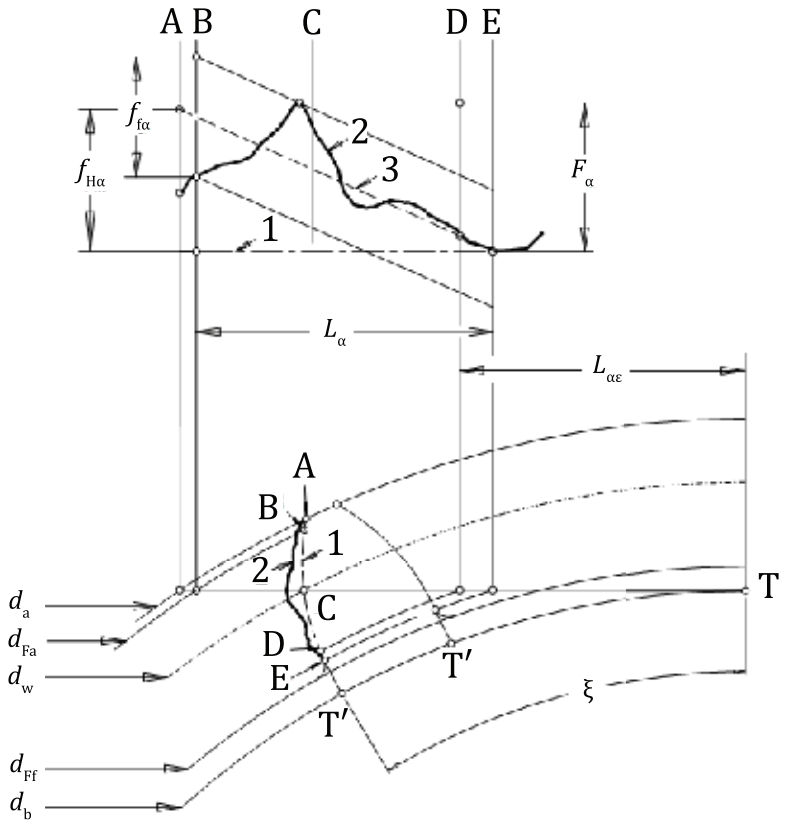

Key

1	design profile	F_α	total profile deviation
2	measured profile	$f_{f\alpha}$	profile form deviation
3	mean profile line	$f_{H\alpha}$	profile slope deviation
A	tip circle point	B-D	active profile
B	start of tip break (chamfer)	B-E	usable profile
C	pitch point	L_α	profile evaluation length
D	start of active profile	$L_{\alpha\varepsilon}$	base tangent length to start of active profile
E	start of profile control	ξ	involute roll angle (shown to point C)
T	start of roll (point of tangency of transverse base tangent)		
T′	origin of involute		

Figure 14 — Tooth profile and profile diagram

6.2.2 Non-generative measurement methods

Generative measurement methods typically are not used with CMM and, due to probe interference risk or the required roll length being too large, they are sometimes not used for internal gears in four axis CNC GMM. In the non-generative method, the tooth flank geometry is considered as a series of points, each with a set of three dimensional coordinates. A calculation is needed to convert from the probe tip centre to the flank surface, and this must be done along a normal to the flank. A spherical stylus tip should be used for these measurements. During measurement, the points of contact between the spherical stylus tip and the tooth flank will vary substantially around the tip. Therefore, the sphericity influences measurement accuracy and both probe datum and the non-uniform stiffness of the probe stylus will affect measurement result accuracy if not properly compensated.

© ISO 2017 – All rights reserved
Documents
Document Sharing Hub
Full document details: PD ISO/TR 10064-1:2017

The data should be evenly spaced along the line of action (which is a base tangent line). ISO 1328-1 specifies that measurement points should be uniformly distributed along this line. This is achieved with even increments in roll angle or length of roll. Note that this data spacing requirement means the radial locations of the data are non-linear.

6.2.3 Pitch measurement methods

6.2.3.1 General

Pitch parameters can be measured by two principles. The indexing (single probe) method measures the location of each tooth around a gear, relative to a datum such as an angular encoder. This method is used on CNC GMM, in-process CNC measurement stations and CMM. The pitch comparator (two-probe) method compares the distances between adjacent tooth flanks to the distance between an initial reference pair of adjacent tooth flanks. This method is used on portable pitch measuring devices such as those illustrated in Figure 9.

6.2.3.2 Single probe method with rotary table

The indexing (single probe) device uses an angular datum such as a rotary encoder with a CNC controlled rotary drive to precisely rotate the gear by an angular increment equal to its pitch, or 360°/z (where z is the number of teeth) (see Figure 15). The degree of the device's precision should be consistent with the tolerance class and diameter of the gear.

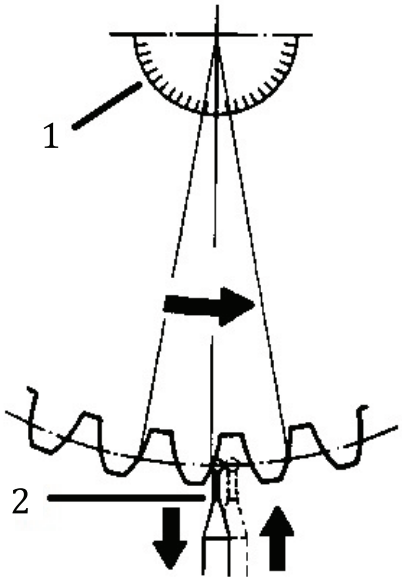

Key

1 encoder

2 probe

Figure 15 — Pitch measurement using a rotary encoder as an angular datum

The gear is mounted with its datum axis coincident with the rotational axis. The single probe should be oriented to contact the tooth flanks at the measurement diameter, d_M, and to gather measurements in the specified measurement direction. The gear is incrementally rotated around its datum axis and the single probe moves in and out on a precision slide and stop, measuring each successive tooth flank position, relative to the angular datum. This process is repeated until every tooth has been measured.

It is common practice to complete this series of measurements by taking a final measurement on the initial reference tooth, thereby closing the circle. Ideally, this would produce a second measurement

© ISO 2017 – All rights reserved

Documents
Document Sharing Hub
Full document details: PD ISO/TR 10064-1:2017

value of zero for the first tooth, as was set at the beginning of the process. Excessive deviation of this second measurement value from zero indicates a problem with the measurement.

Cumulative pitch or index and adjacent pitch deviations are calculated in accordance with ISO 1328-1.

6.2.3.3 Two-probe pitch comparator

The gear should be mounted with its datum axis coincident with the pitch comparator's rotational axis. The first probe acts as a datum for the measurement. The second probe measures the variation in position of the second tooth relative to the first tooth, from which single pitch variation is calculated. The device is adjusted to indicate zero while the probes are contacting the randomly selected initial pair of teeth (see Figure 16). Care is required to assure that the two probes contact at the same diameter.

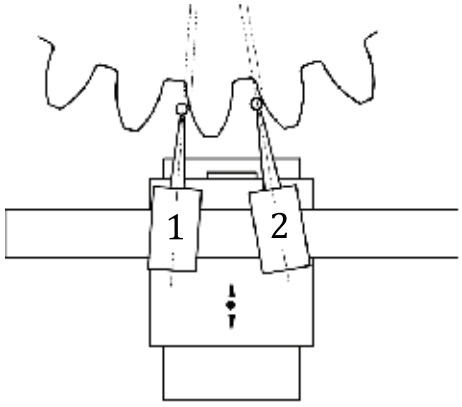

Key

1 datum probe

2 measuring probe

Figure 16 — Two-probe pitch comparator

The two probes should be oriented to contact the adjacent tooth flanks within the same transverse plane, at the measurement diameter, d_M. As the gear is rotated around its datum axis, the pitch comparator moves in and out on a precision slide and stop, measuring each successive adjacent tooth pair. This process is repeated until every adjacent pair of teeth has been measured.

Most two-probe devices include analysis software which calculates the average pitch deviation, and subtract this value from the measured data to calculate single pitch deviations. Cumulative pitch deviations are calculated by summing the single pitch deviations. Most devices allow the results to be printed. This procedure is then repeated on the other flank.

6.2.3.4 Measurement without rotary table

When measuring without a rotary table, the probe tip (single probe) or the probe tip configuration (several probe tips) moves around the gear and probes each point at the measurement diameter. See Figures 3 and 4.

6.2.4 Hand-held pitch measuring devices

Hand-held pitch measuring instruments, such as those illustrated in Figures 17 and 18, do not measure pitch relative to a datum axis. Therefore, they cannot be used to determine compliance with the tolerances defined in accordance with ISO 1328-1. However, when mutually agreed upon by the manufacturer and the purchaser, they may be used to measure either circular pitch or base pitch.

The normal base pitch parameter provides a localized composite observation of gear tooth pitch deviations. It is localized in that the observation is made only at a single point on the tooth flank. It

© ISO 2017 – All rights reserved
AVA Documents Document Sharing Hub
Full document details: PD ISO/TR 10064-1:2017

is composite in that it combines the effects of involute profile, helix, and pitch at different contact diameters into a single observation that directly relates to the gear's ability to achieve smooth, conjugate meshing action with its mate.

Hand-held base pitch measuring instruments can either be set to directly measure the deviations from the theoretical normal base pitch, with the aid of a suitable gauge, or set to reference a randomly selected initial pair of adjacent teeth. If the instrument is adjusted to the specified normal base pitch of a gear prior to commencing measurements, it can provide an observation of normal base pitch deviation, f_{pbn} (see 14.2).

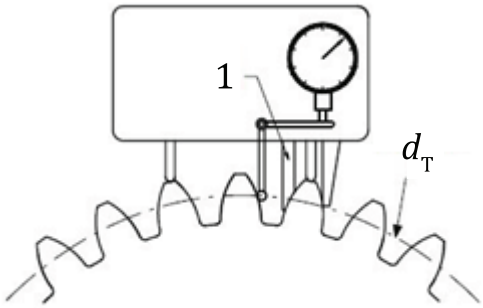

Key

1 spring loaded

Figure 17 — Hand-held two-probe pitch measuring instrument

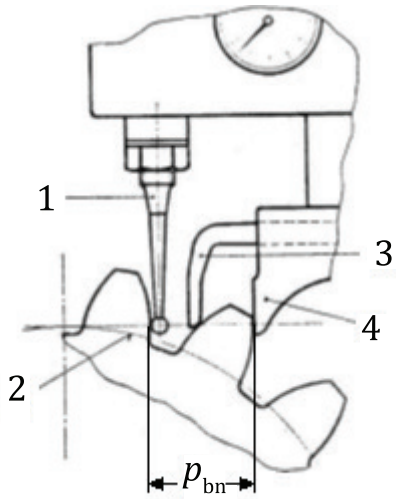

Key

1 measuring feeler
2 base circle
3 counter support
4 anvil

Figure 18 — Base pitch measurement, two-probe device

The normal base pitch can be calculated by using Formula (1):

$$p_{bn} = m_n \pi \cos \alpha_n \tag{1}$$

© ISO 2017 – All rights reserved

Documents
Document Sharing Hub
Full document details: PD ISO/TR 10064-1:2017

where

p_{bn} is the normal base pitch, mm;

m_n is the normal module, mm;

α_n is the normal pressure angle, degrees.

The two measurement probes of the device are oriented to contact adjacent tooth flanks within a base tangent plane. In practice, this involves rocking the device through the possible range of contact of the measuring probe with the tooth flank while observing the measurement indicator. The observed minimum deviation of the indicator will occur at the point of contact corresponding with a base tangent plane. It is important to ensure that the points of contact of the probes do not lie in zones with profile or helix modifications, especially when measuring deviations from the theoretical normal base pitch.

The normal base pitch measurement device is applied successively to each pair of teeth with each indicator measurement recorded. This process is repeated until every adjacent pair of teeth has been measured.

6.2.5 Radial runout measurement

Radial runout is defined as the runout of the tooth space relative to the datum axis of the gear. It is either measured directly by a single ball contacting the left and right flanks of a tooth space simultaneously or calculated indirectly from the measurement of pitch deviations separately on left and right flanks and the theoretical radial position of a ball in two flank contact. It may also be determined by measurements over a cylinder or anvil (shaped like a single tooth of a mating rack) placed in the tooth spaces. Although all these methods produce valid measurement results, it is likely that these results will be slightly different because of flank form deviations, small differences in measurement position, and, when a cylinder or anvil is used, averaging along the line of contact between the cylinder or anvil and the tooth flanks. For non-symmetric teeth, the runout measurement process should be agreed upon between the manufacturer and the purchaser.

The probing sphere or cylinder with an appropriate diameter is moved inside the tooth space until two-flank contact is realized. The diameter of the ball or cylinder or the anvil size should be chosen to contact at the measurement diameter. In cases where interference with the root diameter would occur, a ball or cylinder with a flat should be used. Depending on the device and the gear parameters, the measurement can be produced with or without a rotating table by means of an axis parallel probe or a star-probe. In the case where a star-probe is used, it is necessary to always use an eight star-probe because of the contact conditions. See Figure 19. The gear may also be rotated while supported by “V” blocks on the datum surfaces.

© ISO 2017 – All rights reserved
Documents
Document Sharing Hub
Full document details: PD ISO/TR 10064-1:2017

The use of other methods, such as dual flank composite measurement, to estimate radial runout F_r does not meet the requirements of ISO 1328-1.

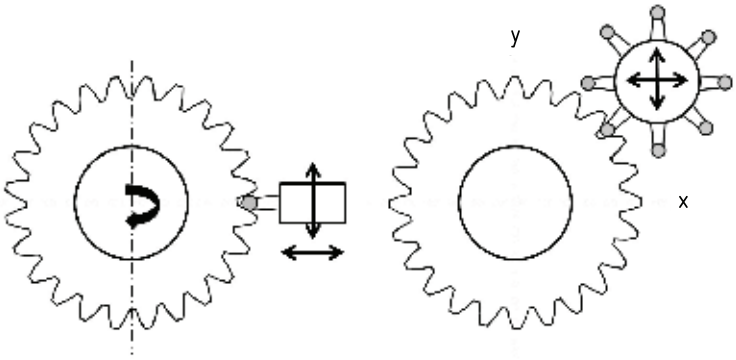

a) Runout test with rotating table (four axis) and axis parallel probe

b) Runout test without rotating table (three axis) with star-probe

Figure 19 — Radial runout measurement

6.2.6 Computer tomography methods for small gears

Very small gears, even those with module <0,1 mm, made of plastic or titanium can be measured with dimensional computer tomography (CT) using x-rays. The result is a cluster of 3D points. See Figure 20 for an example where pitch is measured in the transverse plane and four teeth are measured for profile and helix on both flanks. The gear measurement is executed in three steps. The surface of the point cluster (voxels) is determined first. In a second step, the datum surfaces are measured on a system similar to a CAD system. Then the gear coordinate system can be established and the gear is measured in the same way as on a CMM. The difference is that the physical surface is not touched with a probe pin but instead the virtual calculated surface of the part is measured.

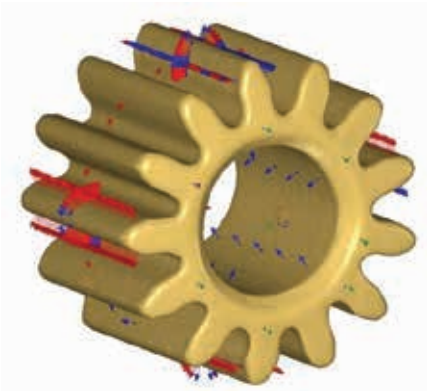

Figure 20 — Small gear measured with computer tomography showing virtual traces on the flanks

6.2.7 Optical devices for small spur gears

For very small spur gears, it is common practice to use optical devices. With image processing, the tooth edge and the bore along the upper face can be determined. After an appropriate selection of measured points, the standard gear profile evaluation can be executed. Intersection of a circle with the gear flank contours gives the pitch points.

© ISO 2017 – All rights reserved

Documents
Document Sharing Hub
Full document details: PD ISO/TR 10064-1:2017

6.3 Calibration of equipment

All measurement processes include random and systematic errors which affect the measurement result. The likely size of the errors is estimated using simple statistical analysis to characterize the process measurement uncertainty.

Methods of estimating measurement uncertainty are defined in ISO 18653. Also, ISO/TR 10064-5 and ISO 22514-7 provide more guidance and examples for calculating measurement uncertainty. The procedures are based around a comparison of measurements from a measuring process and a comparison with calibration values from an accredited calibration laboratory. It is recommended that all measuring processes used for inspecting gears have measurement uncertainty evaluated and used when considering compliance with tolerance specifications.

See 7.1 for recommendations on implementation and evaluation processes.

6.4 Tooth thickness, differences between CNC/CMM and manual measurement

There are several methods for the manual measurement of tooth thickness. They all measure tooth thickness indirectly and therefore tend to produce different values of tooth thickness.

Common methods include:

— measurement over or between balls or pins: this can be done on all but very large gears;

— span measurement: it is often very convenient, but helical gears may not have sufficient unmodified face width for span measurement;

— measurement over blocks (rack shaped artefacts): appropriate blocks are required;

— a special gear tooth caliper may be used where the gear outside diameter is used as the datum. With this method, the distance from the outside diameter to the edges of the jaws of the caliper defines where the normal chordal tooth thickness is measured. All of these methods have some uncertainty. However, a gear tooth caliper has additional uncertainty due to its reliance on the outside diameter of the gear, and the potential for slight rounding of the caliper tips giving false readings.

The manual tooth thickness measurement methods inherently measure in the normal plane at the points of contact. With the exception of a measurement over one ball or pin to the datum axis or a chordal measurement that has been corrected to the radius from the datum axis to the tip of the individual tooth being measured, the manual measurement methods do not reference the datum axis and so do not include the effect of tooth radial runout.

It is important to recognize the fundamental difference between tooth thickness measurement methods that reference the datum axis and those that are independent of the datum axis. Measurements taken in relation to the datum axis determine the functional tooth thickness and can be used to directly predict backlash. Therefore, use of measurement methods that reference the datum axis can be advantageous to closely control backlash. To predict backlash during the design stage, when specifying a tooth thickness measuring method that is independent of the datum axis, such as most of the manual methods, it is necessary to know the total composite tolerances of both mating parts. The total composite tolerances may be estimated from elemental tolerances for this purpose, but such estimations introduce some additional uncertainty.

On a CNC/CMM device, the exact position at the flank in the normal plane, relative to the datum surface, can be probed, at least in principle. But in most cases, the pitch measurement points, which are in a transverse plane, are used to determine the tooth thickness. In case of a helical gear, the points which define the normal tooth thickness are not in a transverse plane but more in a normal plane. Starting from the measured pitch points in a transverse plane, the tooth thickness points are calculated using the unmodified involute flank, ignoring deviations like profile slope deviation, $f_{H\alpha}$, helix slope deviation, $f_{H\beta}$, and crowning plus all other surface deviations. The tooth thickness result is influenced in proportion to the size of the deviations. Tooth thickness specifications should clearly indicate if the tooth thickness value is in the transverse, normal or axial plane, and is a circular arc or chordal thickness.

© ISO 2017 – All rights reserved
Documents
Document Sharing Hub
Full document details: PD ISO/TR 10064-1:2017