PD ISO/TR 11826:2024

BSI Standards Publication

Ophthalmic optics — Spectacle lenses — Aspects of three-dimensional properties and reference markings

Documents
Document Sharing Hub

Full document details: PD ISO/TR 11826:2024

National foreword

This Published Document is the UK implementation of ISO/TR 11826:2024.

The UK participation in its preparation was entrusted to Technical Committee CH/172/3, Spectacles.

A list of organizations represented on this committee can be obtained on request to its committee manager.

Contractual and legal considerations

This publication has been prepared in good faith, however no representation, warranty, assurance or undertaking (express or implied) is or will be made, and no responsibility or liability is or will be accepted by BSI in relation to the adequacy, accuracy, completeness or reasonableness of this publication. All and any such responsibility and liability is expressly disclaimed to the full extent permitted by the law.

This publication is provided as is, and is to be used at the recipient's own risk.

The recipient is advised to consider seeking professional guidance with respect to its use of this publication.

This publication is not intended to constitute a contract. Users are responsible for its correct application.

This publication is not to be regarded as a British Standard.

© The British Standards Institution 2024
Published by BSI Standards Limited 2024

ISBN 978 0 539 19787 7

ICS 11.040.70

Compliance with a Published Document cannot confer immunity from legal obligations.

This Published Document was published under the authority of the Standards Policy and Strategy Committee on 31 July 2024.

Amendments/corrigenda issued since publication

Date	Text affected

Documents
Document Sharing Hub

Full document details: PD ISO/TR 11826:2024

Technical Report

ISO/TR 11826

First edition
2024-07

Ophthalmic optics — Spectacle lenses — Aspects of three-dimensional properties and reference markings

Optique ophtalmique — Verres de lunettes — Aspects des propriétés tridimensionnelles et marquages de référence

Reference number
ISO/TR 11826:2024(en)

© ISO 2024

Documents
Document Sharing Hub

Full document details: PD ISO/TR 11826:2024

COPYRIGHT PROTECTED DOCUMENT

© ISO 2024

All rights reserved. Unless otherwise specified, or required in the context of its implementation, no part of this publication may be reproduced or utilized otherwise in any form or by any means, electronic or mechanical, including photocopying, or posting on the internet or an intranet, without prior written permission. Permission can be requested from either ISO at the address below or ISO's member body in the country of the requester.

ISO copyright office
CP 401 • Ch. de Blandonnet 8
CH-1214 Vernier, Geneva
Phone: +41 22 749 01 11
Email: copyright@iso.org
Website: www.iso.org

Published in Switzerland

Documents
Document Sharing Hub
Full document details: PD ISO/TR 11826:2024

Contents

Page

Foreword ..... **iv**
Introduction ..... **v**
1 Scope **1**
2 Normative references **1**
3 Terms and definitions **1**
4 Technical background **1**
4.1 General 1
4.2 Spectacle lenses 1
4.3 Spectacle frames 2
5 Influence of three-dimensional effects and necessity to deal with them **3**
5.1 Optical effects 3
5.2 Reference points on front surface versus back surface meeting the eye in as-worn position 7
5.3 Positioning errors from the images of markings on the back surface 10
5.3.1 General 10
5.3.2 Simulation results 12
6 Different approaches to specifying measurement positions and alignment **15**
6.1 General 15
6.2 Reference coordinate systems defined by engravings 16
6.2.1 General 16
6.2.2 Reference coordinate system for front side engravings 16
6.2.3 Reference coordinate system for back side engravings 17
6.2.4 Data Communication Standard (DCS) from the Vision Council 19
6.3 Summary 21
7 Conclusion **22**
Bibliography **24**

© ISO 2024 – All rights reserved

Documents
Document Sharing Hub
Full document details: PD ISO/TR 11826:2024

Foreword

ISO (the International Organization for Standardization) is a worldwide federation of national standards bodies (ISO member bodies). The work of preparing International Standards is normally carried out through ISO technical committees. Each member body interested in a subject for which a technical committee has been established has the right to be represented on that committee. International organizations, governmental and non-governmental, in liaison with ISO, also take part in the work. ISO collaborates closely with the International Electrotechnical Commission (IEC) on all matters of electrotechnical standardization.

The procedures used to develop this document and those intended for its further maintenance are described in the ISO/IEC Directives, Part 1. In particular, the different approval criteria needed for the different types of ISO documents should be noted. This document was drafted in accordance with the editorial rules of the ISO/IEC Directives, Part 2 (see www.iso.org/directives).

ISO draws attention to the possibility that the implementation of this document may involve the use of (a) patent(s). ISO takes no position concerning the evidence, validity or applicability of any claimed patent rights in respect thereof. As of the date of publication of this document, ISO had not received notice of (a) patent(s) which may be required to implement this document. However, implementers are cautioned that this may not represent the latest information, which may be obtained from the patent database available at www.iso.org/patents. ISO shall not be held responsible for identifying any or all such patent rights.

Any trade name used in this document is information given for the convenience of users and does not constitute an endorsement.

For an explanation of the voluntary nature of standards, the meaning of ISO specific terms and expressions related to conformity assessment, as well as information about ISO's adherence to the World Trade Organization (WTO) principles in the Technical Barriers to Trade (TBT), see www.iso.org/iso/foreword.html.

This document was prepared by Technical Committee ISO/TC 172, *Optics and photonics*, Subcommittee SC 7, *Ophthalmic optics and instruments*.

Any feedback or questions on this document should be directed to the user's national standards body. A complete listing of these bodies can be found at www.iso.org/members.html.

© ISO 2024 – All rights reserved

Documents
Document Sharing Hub
Full document details: PD ISO/TR 11826:2024

Introduction

In current standards, spectacle lenses are mostly treated as two-dimensional objects.

However, knowing their three-dimensional geometrical properties is helpful to fully understand their optical effects. Therefore, these are already taken into account in the industry in some instances, e.g. to increase the performance of products and the accuracy of measurements.

The aim of this document is to deliver background information on this topic, to provide helpful terminology including parameters, and to present some ways of dealing with their impacts. It is intended as a source of information to the manufacturers of spectacle lenses, measurement systems, and mounting equipment as well as to the optometric and dispensing professions.

© ISO 2024 – All rights reserved

Documents
Document Sharing Hub
Full document details: PD ISO/TR 11826:2024

Documents
Document Sharing Hub

Ophthalmic optics — Spectacle lenses — Aspects of three-dimensional properties and reference markings

1 Scope

This document is applicable to the three-dimensional aspects of spectacle lenses and their mounting in frames. It gives possible details of how these aspects can be taken into account, particularly for lenses with their permanent reference engravings (markings) on their back surface.

2 Normative references

The following documents are referred to in the text in such a way that some or all of their content constitutes requirements of this document. For dated references, only the edition cited applies. For undated references, the latest edition of the referenced document (including any amendments) applies.

ISO 13666, *Ophthalmic optics — Spectacle lenses — Vocabulary*

3 Terms and definitions

For the purposes of this document, the terms and definitions given in ISO 13666 apply.

ISO and IEC maintain terminology databases for use in standardization at the following addresses:

— ISO Online browsing platform: available at https://www.iso.org/obp

— IEC Electropedia: available at https://www.electropedia.org/

4 Technical background

4.1 General

Changes in the method of manufacture of spectacle lenses and in the styling of some spectacle frames have generated problems of positioning lenses correctly in the frame that did not occur in the 20th century. Conversely, free form manufacture allows the benefits of individualized computer enhancement and more sophisticated lens designs but requires an improved, and available, ability to position lenses.

Many aspects related to the use of free form technology are explained in ISO/TR 18476[1], which also covers optical effects relevant to the topics discussed in this document.

4.2 Spectacle lenses

The reference points and design reference points are specified in ISO 13666 to be on the front surface of the lens. This is logical, in that the marking device on focimeters dots the front surface of the lens, in particular the optical centre for single-vision lenses. This dot is used for positioning the uncut lens correctly for edging it to shape for mounting in the frame. Although errors in prism imbalance (relative prism error) are generated if lenses are not correctly centred in the frame in front of the eyes, there is no or little effect on the binocular field of view for single-vision lenses or for the far and near fields of view with multifocal lenses. Position-specific single-vision lenses and power-variation lenses have, however, to be positioned so that their optical properties including, where applicable, the (intermediate) corridor and near portion are aligned with the eyes. The conventional construction of progressive-power and degressive-power lenses was to use a blank with the power-variation surface moulded (or sagged for glass blanks) on the front surface of the blank, then

© ISO 2024 – All rights reserved

Documents
Document Sharing Hub
Full document details: PD ISO/TR 11826:2024

surfacing the prescription onto the back surface. The two permanent alignment reference markings were positioned on the complicated surface, and thus automatically on the front, and were used to generate the reference point for mounting the lenses.

The ability to combine the prescription and complicated surface of power-variation lenses on the back surface and generate this using free form technology – see ISO/TR 18476[1] – means that the permanent alignment reference markings are now usually positioned on the back surface of the lens. These markings are, however, viewed through the front surface when positioning the uncut lens for mounting in the frame. Prism incorporated in the lens, whether prism thinning or prism required by the lens order, displaces the apparent position of these markings and hence the midpoint between them, while the convex front surface will magnify their separation. Position-specific single-vision lenses also have complicated back surfaces generated with free form technology, and are likely therefore also to be marked on the back surface.

In many respects, it is more logical to have the reference points on the back surface of the lens, since it is rays leaving the back surface that enter the eye, but this change requires an enormous change to the methods of working in the lens mounting industry, including non-permanent lens inking and edging block positioning presently on the front. Moreover, nose pads and spectacle sides are likely to be in the way when measuring the positioning of mounted lenses. Changing to using the back surface for reference points for lenses is therefore a “non-starter”.

4.3 Spectacle frames

Until the early 2000's, spectacle frames had fronts which were relatively flat so that the two lenses lay in the same plane, or nearly so. Since then, a minority of frames have been designed with a significant face form or wrap angle (see ISO 8624[2]). This can have an effect on the decentration needed – the geometrical relationship between various distances is given in the notes to entry for the term “centration point” in ISO 13666.

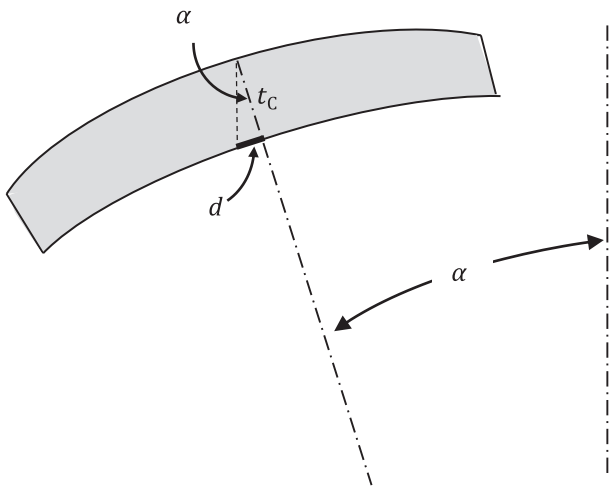

Key

α as-worn face form angle

d displacement

t_c centre thickness

Figure 1 — Displacement caused by the face form angle and lens thickness

An additional point for lenses in frames with significant face form angle is the thickness of the lens. The front surface can lie in front of the plane of the lens shape or of the dummy/demonstration lens by an amount depending upon the centre thickness of the lens and the position of the peak of the bevel relative to the edge of the lens. This results in a nasal displacement between the centration point on the front surface and the

© ISO 2024 – All rights reserved

Documents
Document Sharing Hub
Full document details: PD ISO/TR 11826:2024

intersection of the normal to the front surface at this point with the back surface. As shown in Figure 1, this displacement, d, can be calculated by Formula (1):

$$d = t_c \tan \alpha \quad (1)$$

e.g. 0,67 mm for a lens 2,5 mm thick or thicker than the dummy lens for a face form angle of 15°.

The as-worn pantoscopic angle can have a similar effect on vertical centration, but at least the errors are in the same direction in both lenses rather than additive with base in or base out for the face form angle. If the vertical component of the centration point position is measured in the plane of the lens shape, no errors are expected to occur, but if it is measured projected onto a vertical plane, e.g. by a digital dispensing system that does not take account of the as-worn pantoscopic angle, then errors could occur. If the height measured in the vertical plane is y and the as-worn pantoscopic angle is θ, then the height y' in the plane of the lens shape as shown in Figure 2 is given by Formula (2):

$$y' = y/\cos \theta \quad (2)$$

Taking an example of an as-worn pantoscopic angle of 10° and a centration point height of 20 mm from the tangent to the bottom rim, the required measurement in the plane of the lens shape is only about 0,31 mm larger than the apparent measurement in the vertical plane, but for a pantoscopic angle of 15°, it is 0,71 mm. At the centre of rotation of the eye, about 27 mm behind the lens, these distances correspond to just over 1,0 Δ and 2,5 Δ respectively. The wearer can compensate for such a small induced prismatic effect by an upwards or downwards gaze movement.

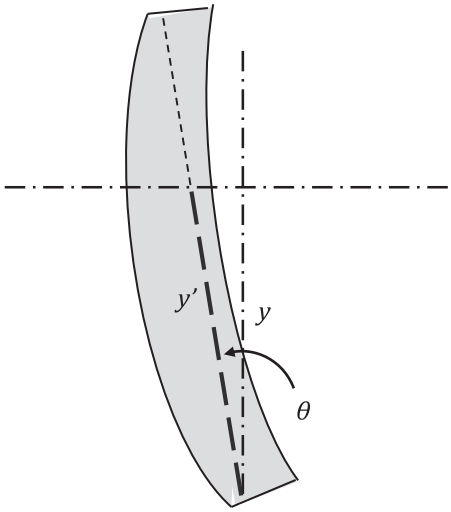

Key

y	apparent height measured in a vertical plane
y'	height measured in the plane of the lens shape
θ	as-worn pantoscopic angle

Figure 2 — Potential error in fitting height with the as-worn pantoscopic angle

5 Influence of three-dimensional effects and necessity to deal with them

5.1 Optical effects

Optical aberrations in conventional spectacle dispensing can be minimised by decentring the optical centre of the lens horizontally and vertically in the spectacle frame so that the optical axis of the lens passes approximately through the eye's centre of rotation, the "centre of rotation condition". With a relatively flat fronted spectacle frame (see 4.3), matching the centration distance to the wearer's monocular centration

© ISO 2024 – All rights reserved

Documents
Document Sharing Hub
Full document details: PD ISO/TR 11826:2024