PD ISO/TR 16219:2024

BSI Standards Publication

Fans — System effects and system effect factors

Documents
Document Sharing Hub

Full document details: PD ISO/TR 16219:2024

National foreword

This Published Document is the UK implementation of ISO/TR 16219:2024. It supersedes PD ISO/TR 16219:2020, which is withdrawn.

The UK participation in its preparation was entrusted to Technical Committee MCE/17, Fans.

A list of organizations represented on this committee can be obtained on request to its committee manager.

Contractual and legal considerations

This publication has been prepared in good faith, however no representation, warranty, assurance or undertaking (express or implied) is or will be made, and no responsibility or liability is or will be accepted by BSI in relation to the adequacy, accuracy, completeness or reasonableness of this publication. All and any such responsibility and liability is expressly disclaimed to the full extent permitted by the law.

This publication is provided as is, and is to be used at the recipient's own risk.

The recipient is advised to consider seeking professional guidance with respect to its use of this publication.

This publication is not intended to constitute a contract. Users are responsible for its correct application.

This publication is not to be regarded as a British Standard.

© The British Standards Institution 2024
Published by BSI Standards Limited 2024

ISBN 978 0 539 29471 2

ICS 23.120

Compliance with a Published Document cannot confer immunity from legal obligations.

This Published Document was published under the authority of the Standards Policy and Strategy Committee on 31 August 2024.

Amendments/corrigenda issued since publication

Date	Text affected

Documents
Document Sharing Hub

Full document details: PD ISO/TR 16219:2024

Technical Report

ISO/TR 16219

Fans — System effects and system effect factors

Ventilateurs — Effet système et facteurs d'effet système

Second edition
2024-08

Reference number
ISO/TR 16219:2024(en)

© ISO 2024

Documents
Document Sharing Hub

Full document details: PD ISO/TR 16219:2024

COPYRIGHT PROTECTED DOCUMENT

© ISO 2024

All rights reserved. Unless otherwise specified, or required in the context of its implementation, no part of this publication may be reproduced or utilized otherwise in any form or by any means, electronic or mechanical, including photocopying, or posting on the internet or an intranet, without prior written permission. Permission can be requested from either ISO at the address below or ISO's member body in the country of the requester.

ISO copyright office
CP 401 • Ch. de Blandonnet 8
CH-1214 Vernier, Geneva
Phone: +41 22 749 01 11
Email: copyright@iso.org
Website: www.iso.org

Published in Switzerland

Documents
Document Sharing Hub
Full document details: PD ISO/TR 16219:2024

Contents

Page

Foreword ... **iv**
Introduction ... **v**
1 Scope ... **1**
2 Normative references ... **1**
3 Terms, definitions and symbols ... **1**
4 Origin of fan system effects ... **2**
5 Definitions of system effect factor (SEF) ... **4**
5.1 Inlet SEF ... 4
5.2 Outlet system effect ... 6
6 Examples of inlet SEF ... **9**
6.1 Introduction ... 9
6.2 Axial fans ... 9
6.2.1 Experimental setups ... 9
6.2.2 Results ... 14
6.3 Centrifugal and mixed-flow fans ... 16
6.3.1 Experimental setups ... 16
6.3.2 Results ... 23
7 Examples of outlet SEF ... **27**
7.1 Axial fans ... 27
7.1.1 General ... 27
7.1.2 Experimental setups ... 27
7.1.3 Results ... 28
7.2 Centrifugal and mixed-flow fans ... 29
7.2.1 Experimental setups ... 29
7.2.2 Results ... 30
8 Reducing system effects ... **31**
8.1 General ... 31
8.2 Inlet effects ... 31
8.2.1 General ... 31
8.2.2 Non-uniform flow ... 32
8.2.3 Swirl or vorticity ... 33
8.2.4 Inlet blockage ... 33
8.3 Outlet effects ... 36
8.3.1 General ... 36
8.3.2 Insufficient duct length ... 36
8.3.3 Outlet obstruction ... 37
8.3.4 Non-uniform flow ... 37
8.4 Examples of the effects of poor inlet and outlet connections ... 40
9 Conclusions ... **40**
Annex A (informative) **Basic principles on fan performance representation** ... **42**
Annex B (informative) **Fan system calculation** ... **70**
Annex C (informative) **Changes in fan shaft input power (absorbed) in relation to system effects** ... **79**
Bibliography ... **80**

© ISO 2024 – All rights reserved

Documents
Document Sharing Hub
Full document details: PD ISO/TR 16219:2024

Foreword

ISO (the International Organization for Standardization) is a worldwide federation of national standards bodies (ISO member bodies). The work of preparing International Standards is normally carried out through ISO technical committees. Each member body interested in a subject for which a technical committee has been established has the right to be represented on that committee. International organizations, governmental and non-governmental, in liaison with ISO, also take part in the work. ISO collaborates closely with the International Electrotechnical Commission (IEC) on all matters of electrotechnical standardization.

The procedures used to develop this document and those intended for its further maintenance are described in the ISO/IEC Directives, Part 1. In particular, the different approval criteria needed for the different types of ISO document should be noted. This document was drafted in accordance with the editorial rules of the ISO/IEC Directives, Part 2 (see www.iso.org/directives).

ISO draws attention to the possibility that the implementation of this document may involve the use of (a) patent(s). ISO takes no position concerning the evidence, validity or applicability of any claimed patent rights in respect thereof. As of the date of publication of this document, ISO had not received notice of (a) patent(s) which may be required to implement this document. However, implementers are cautioned that this may not represent the latest information, which may be obtained from the patent database available at www.iso.org/patents. ISO shall not be held responsible for identifying any or all such patent rights.

Any trade name used in this document is information given for the convenience of users and does not constitute an endorsement.

For an explanation of the voluntary nature of standards, the meaning of ISO specific terms and expressions related to conformity assessment, as well as information about ISO's adherence to the World Trade Organization (WTO) principles in the Technical Barriers to Trade (TBT), see www.iso.org/iso/foreword.html.

This document was prepared by Technical Committee ISO/TC 117, *Fans*.

This second edition cancels and replaces the first edition (ISO 16219:2020), which has been technically revised.

The main changes are as follows:

— Annex C has been added.

Any feedback or questions on this document should be directed to the user's national standards body. A complete listing of these bodies can be found at www.iso.org/members.html.

© ISO 2024 – All rights reserved

Documents
Document Sharing Hub
Full document details: PD ISO/TR 16219:2024

Introduction

ISO 5801 provides the information for accurately measuring the performance of fans when tested under standardised laboratory conditions. The ducting where specified ensures a fully developed symmetrical velocity profile at the fan inlet. There can also be sufficient straight ducting at the fan outlet to ensure efficient conversion of the distorted velocity profile at the fan outlet to a measurable stable and homogeneous profile at the measuring station.

This document shows how fan performance is affected by both inlet and outlet connections to it. System designers must not only look at the ideal performance curve and calculated system pressure drop but also take into account the losses at the entry and exit points of the fan. These are described in the document.

The concept of the system effect factor (SEF) was introduced to the fan industry by AMCA in 1973. Since its inception it has become widely accepted worldwide. In more recent years, it has been realized that the SEF depends not only on the fan type and the fitting geometry but also on the fan design and manufacturing. Some less efficient fans can sometimes be less sensitive to system effect induced by poor inlet flow conditions than more efficient fans of the same type.

Furthermore, the origin of the system effect induced by a fitting at the fan inlet is different from the one due to the same fitting located on the fan outlet. That is why two different definitions of SEF are proposed in this document according to whether the appurtenance is at the fan inlet or fan discharge.

© ISO 2024 – All rights reserved

Documents
Document Sharing Hub
Full document details: PD ISO/TR 16219:2024

Documents
Document Sharing Hub

Fans — System effects and system effect factors

1 Scope

This document deals with the likely degradation of air performance of fans tested in standardized airways according to ISO 5801 when compared with the performance of fans tested under actual site conditions. It deals with the performance of a number of generic types of fan and fittings. The results given are intended as guidelines and only provide trends, as the system effect depends on the exact geometry of the fan and disturbing component.

The test data presented in this document are taken from an extensive experimental program conducted 20 years ago by NEL (National Engineering Laboratory, UK), mainly on axial and centrifugal fans. Data are also taken from several research projects financially supported by ASHRAE, some of them being carried out in the AMCA laboratory in Chicago, as well as from results published previously by individual fan manufacturers.

2 Normative references

There are no normative references in this document.

3 Terms, definitions and symbols

No terms and definitions are listed in this document.

ISO and IEC maintain terminology databases for use in standardization at the following addresses:

— ISO Online browsing platform: available at https://www.iso.org/obp

— IEC Electropedia: available at https://www.electropedia.org/

The following symbols are used:

Symbol	Description	SI units	I-P units
A_2	Fan outlet area	m^2	ft^2
C	System effect (SE) coefficient (see 5.2)	Dimensionless	Dimensionless
p_C	Conventional pressure loss (see 5.2)	Pa	in. wg
p_f	Fan pressure	Pa	in. wg
p_{fd}	Fan dynamic pressure (see Clause 4)	Pa	in. wg
p_{fs}	Fan static pressure	Pa	in. wg
p_{SE}	System effect (see 5.2)	Pa	in. wg
p_{SEo}	Additional pressure loss due to non-uniform flow (see 5.2)	Pa	in. wg
q_{V1}	Volume flow rate of the fan	m^3/s	cfm
S_{EF}	System effect factor	Dimensionless	Dimensionless
ξ	Loss coefficient (see 5.1)	$(m^3/s)/(Pa^{0,5})$	
ρ	Density of air	kg/m^3	lbm/ft^2
ρ_{std}	Standard air density	kg/m^3	lbm/ft^2
NOTE The term “fan dynamic pressure” or “dynamic pressure” is used throughout this document and is equivalent to the term “velocity pressure” as used in some countries.			

© ISO 2024 – All rights reserved

Documents
Document Sharing Hub
Full document details: PD ISO/TR 16219:2024

4 Origin of fan system effects

Manufacturers' fan performance ratings are mostly based on tests carried out in a laboratory under ideal conditions. Ideal conditions refer to uniform, swirl-free air velocity profiles at fan inlet and outlet, like those of the test rigs described in ISO 5801 and AMCA 210. In 'real life' fan installations, it is possible that such ideal conditions are not present due to improper connection of the fan to the system. Such improper connections include obstacles at fan inlets and outlets that alter the aerodynamic characteristics of the fan and lead to deficient performance in relation to catalogue ratings, even when the system pressure losses have been estimated accurately. The term "system effect" is a measure of this degradation of fan performance.

The origin of system effect is different at fan outlet and at fan inlet. At the fan outlet, for example in the case of an improperly connected outlet fitting such as an elbow, damper or duct branch, the system effect is linked to less-than-optimum non-uniform flow profiles induced by the fan at the entrance to the fitting (Figure 1). This degraded flow will create more pressure loss across the fitting than would be the case when measuring the fitting loss assuming uniform homogeneous flow profiles or when estimating it from standard handbooks such as the ASHRAE Handbook of Fundamentals[14].

When the fitting is at the fan inlet, for example an elbow or a fan inlet duct/box (Figure 2), the velocity profiles at the inlet to the fitting can be uniform and the fitting pressure loss as measured or estimated from standard handbooks can be valid. However, the flow patterns at the fan inlet (or fitting outlet) can be disturbed with the presence of a vortex, spin or vena-contracta. This less than optimum flow condition at fan inlet caused by the fitting will lead to a reorganization of the flow inside the impeller and therefore a deterioration of fan performance in relation to catalogue ratings. Not only the fan curve can be affected by this disturbing obstacle but also sometimes, but not always, the fan power curve. A companion document will be drafted at a later date to show the influence of the inlet obstacles on the fan power curve for the same configurations of fans and fittings as in this document.

In both cases, the resulting air flow of the fan-system combination deteriorates, but for distinct physical reasons. For this reason, two different definitions and treatment of fan system effect are incorporated, depending on whether the fitting is at the fan inlet or fan outlet. It is also recognized that in some situations, obstacles very close to fan discharge (e.g. side walls at a short distance of a plenum fan impeller as shown in Figure 20) can also deteriorate fan performance in the same manner as components located at fan inlet.

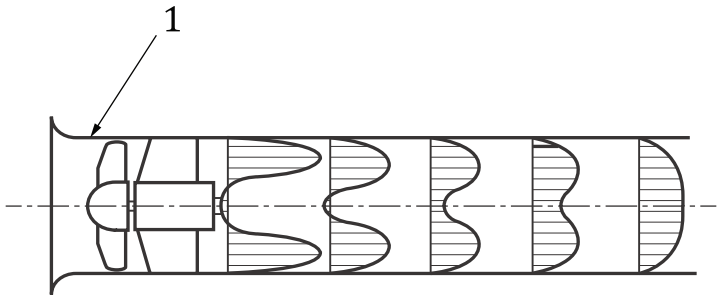

Key

1 axial fan

Figure 1 — Non-uniform velocity profiles at fan outlet

© ISO 2024 – All rights reserved

Documents
Document Sharing Hub
Full document details: PD ISO/TR 16219:2024

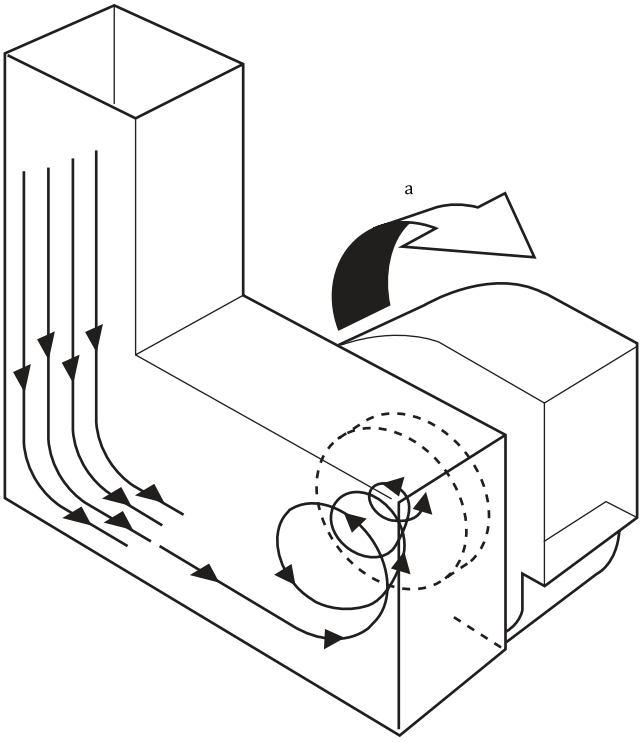

a Impeller rotation.

Figure 2 — Vortex at fan inlet

An ideal connection to a fan would be one which results in a velocity distribution across the fan inlet connection plane which is relatively uniformly distributed and without appreciable swirl component, as shown in Figure 3.

© ISO 2024 – All rights reserved

Documents
Document Sharing Hub
Full document details: PD ISO/TR 16219:2024

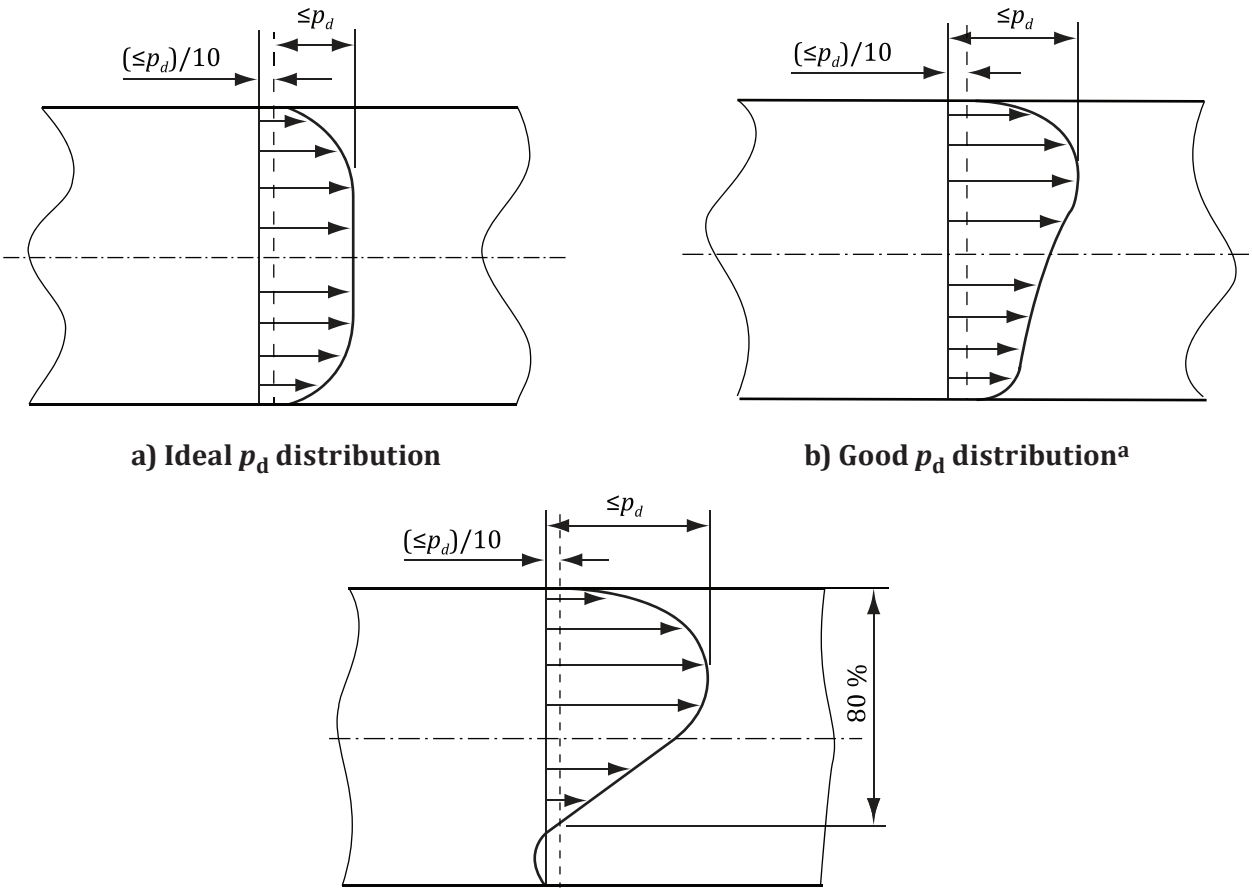

a) Ideal p_d distribution

b) Good p_d distribution[a]

c) Satisfactory p_d distribution[b]

Key

p_d mean dynamic pressure of the duct flow

a Also satisfactory for flow into fan inlets, but can be unsatisfactory for flow into inlet boxes, can produce swirl in boxes.

b More than 75 % of p_d readings greater than $p_{dmax}/10$ (unsatisfactory for flow into fan inlets of inlet boxes).

Figure 3 — Ideal fan connections

5 Definitions of system effect factor (SEF)

5.1 Inlet SEF

With a component at the fan inlet, the SEF is defined as the relative airflow drop $\Delta q_{V1}/q_{V1}$ along a given system line as shown in Figure 4. In this figure, the solid curve and the dotted line curve are the static pressure curves without and with system effect, respectively. The curve with system effect is obtained by adding the pressure loss of the fitting for each flow rate increment, when it can be measured or estimated from guidebooks (e.g. IDEL'CIK), to the static pressure of the fan + inlet fitting combination. This procedure allows for the assessment of the installation effect related to the degradation of the fan curve itself without accounting for the pressure loss of the fitting.

To quantify the system effect on the whole fan curve, the quantity $\Delta q_{V1}/q_{V1}$ is plotted versus the system resistance coefficient $\xi = q_{V1} / \sqrt{p_{fs}}$ (p_{fs} being the fan static pressure at q_{V1})[1)] in Figure 5.

1) q_{V1} is either in cfm or m^3/s while p_{fs} is either in. wg or Pa.

© ISO 2024 – All rights reserved

Documents
Document Sharing Hub
Full document details: PD ISO/TR 16219:2024

The SEF for a given fan + inlet fitting configuration is the average of $\Delta q_{V1}/q_{V1}$ over the ξ range, presented as a percentage in the results. $\Delta q_{V1}/q_{V1}$ is positive when the flow with the inlet fitting is lower than that of the free inlet configuration.

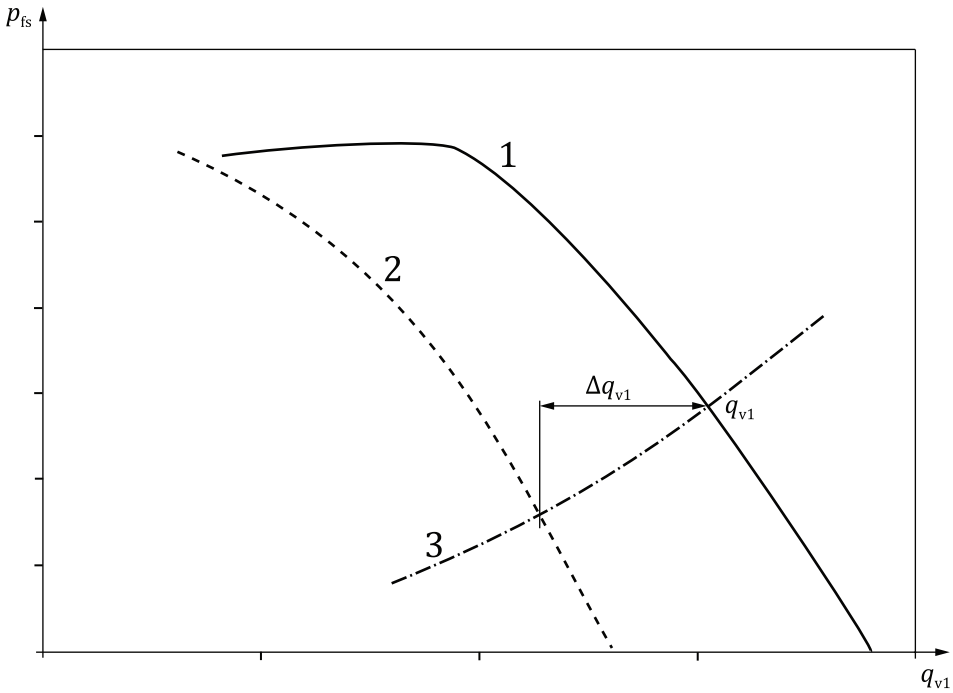

Key

q_{V1}	volume flow rate of the fan
p_{fs}	fan pressure
1	fan curve without system effect
2	fan curve with system effect
3	system line

Figure 4 — Definition of q_{V1} and Δq_{V1} on a given system line

© ISO 2024 – All rights reserved

Documents
Document Sharing Hub
Full document details: PD ISO/TR 16219:2024

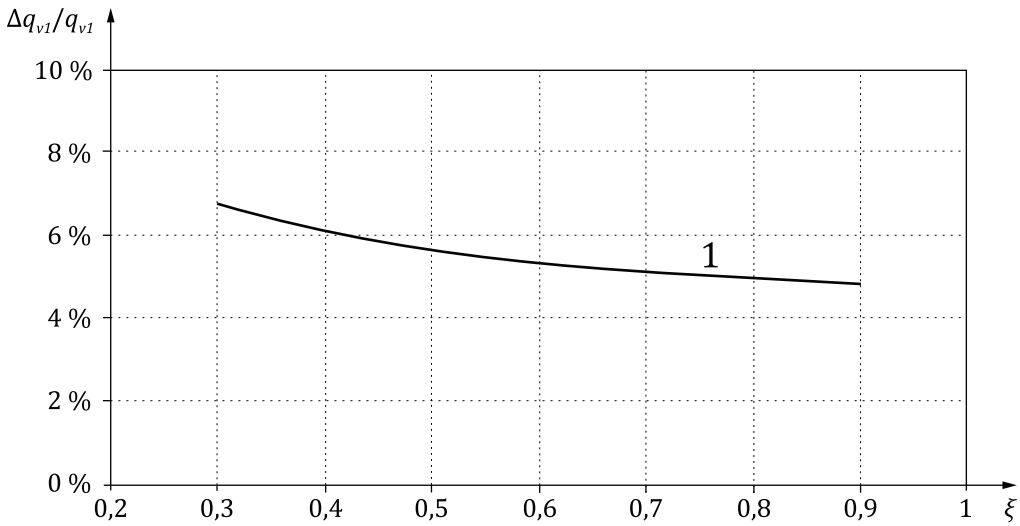

Key

$\Delta q_{V1}/q_{V1}$ relative flow drop in volume flow rate of the fan

ξ system resistance coefficient

1 system effect curve

Figure 5 — Example of relative flow drop $\Delta q_{V1}/q_{V1}$ versus system resistance coefficient ξ

Clause 6 describes various situations resulting in inlet system effects.

5.2 Outlet system effect

Outlet system effect is a measure of the pressure losses across fan outlet appurtenances such as an outlet duct, elbow, volume control damper, duct branch or plenum, due to non-uniform outlet flow induced by the fan and improper outlet connections.

Most fans, for applications requiring systems connected at their outlets, are tested and rated for performance with an outlet duct 2 to 3 'equivalent duct diameter' long. The outlet duct helps control the diffusion of the outlet flow and establish a uniform velocity profile (Figure 6). In most cases, it is not practical for the fan manufacturer to supply this duct as part of the fan, but rated performance will not be achieved unless a comparable duct is included in system design.

© ISO 2024 – All rights reserved

Documents
Document Sharing Hub
Full document details: PD ISO/TR 16219:2024

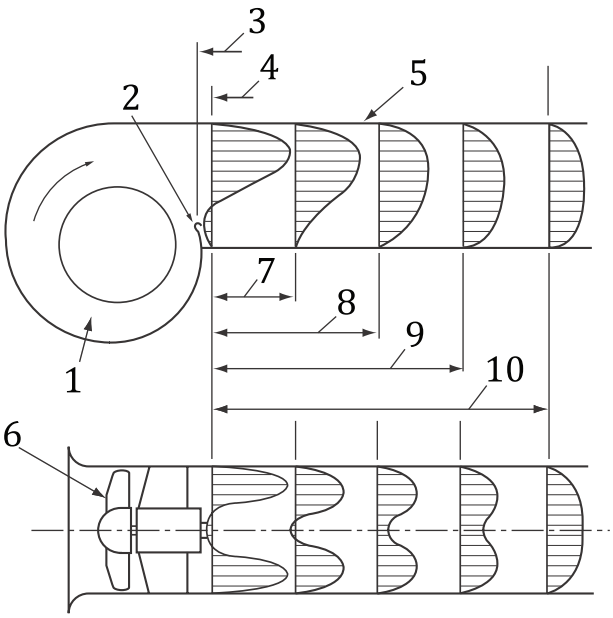

Key

1 centrifugal fan
2 cutoff
3 blast area
4 outlet area
5 discharge duct
6 axial fan
7 25 % effective duct length
8 50 % effective duct length
9 75 % effective duct length
10 100 % effective duct length

Figure 6 — Velocity profiles at fan outlet

The techniques documented to estimate pressure losses of a fitting such as an elbow or the published pressure drop performance from a manufacturer of a fitting such as a damper are based upon uniform approach velocity profiles. The pressure loss so estimated is referred to as the 'conventional pressure loss' across the fitting. Unless uniform approach velocity profile is ensured, there will be additional pressure losses across these fittings. Outlet system effect is used to estimate the actual pressure loss across the fitting in a given installation.

Clause 7 describes various situations resulting in outlet system effects. The total outlet system effect, p_{SE} (Pa), for a given situation (fitting) is defined as:

$$p_{SE} = p_c + p_{SEo}$$

where

p_c is conventional pressure loss (Pa);

p_{SEo} is additional pressure loss due to non-uniform flow (Pa).

p_{SEo} can be expressed as a function of flow by the following formula:

$$p_{SEo} = C \times p_{fd2}$$

© ISO 2024 – All rights reserved

Documents
Document Sharing Hub
Full document details: PD ISO/TR 16219:2024

where

p_{fd2} is dynamic pressure at fan outlet $0{,}5 \cdot \rho \cdot (q_{V1}/A_2)^2$;

q_{V1} is fan airflow rate, m^3/s;

A_2 is fan outlet area in m^2;

C is system effect coefficient;

ρ is air density in kg/m^3.

The outlet system effect p_{SE} at each flow rate q_{V1} must be added to the design system curve to obtain the actual system curve (Figure 7).

The system effect coefficient C is averaged over the fan curve to obtain what is called the outlet SEF in Clause 7.

$P_B - P_A$ = fitting conventional pressure drop at design flow

$P_C - P_B$ = outlet system effect, p_{SEo}, at design flow

$P_E - P_D$ = fitting conventional pressure drop at actual flow

$P_F - P_E$ = outlet system effect, p_{SEo}, at actual flow

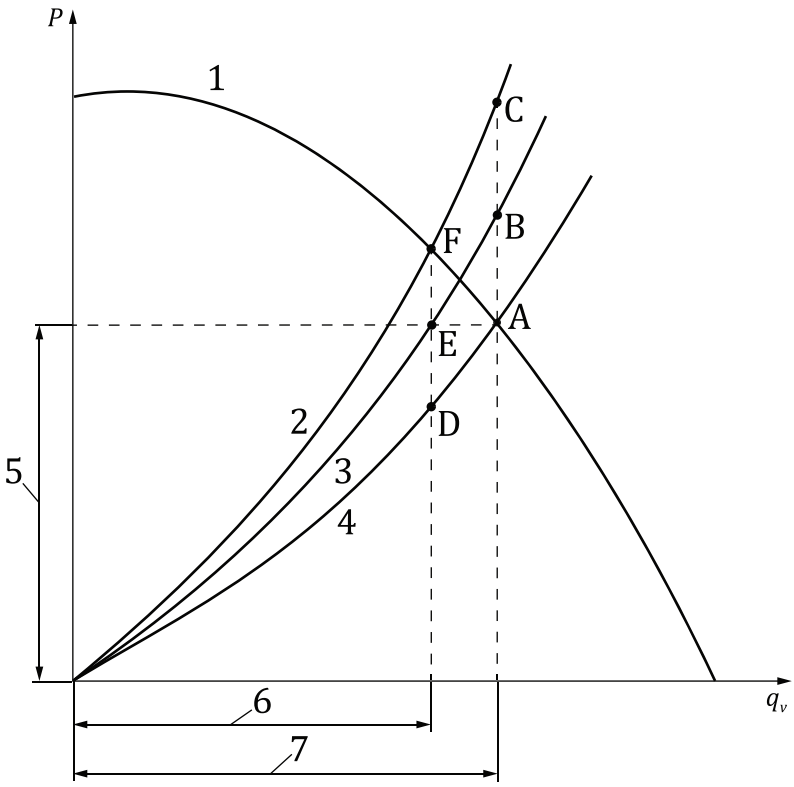

Key

q_V fan volume flow rate

P fan pressure

1 fan catalogue pressure-flow curve

2 actual system curve

3 system curve with fitting conventional pressure drop

4 system curve without conventional pressure drop and no allowance for system effect

© ISO 2024 – All rights reserved

Documents
Document Sharing Hub
Full document details: PD ISO/TR 16219:2024

5 design pressure
6 actual flow
7 design flow

Figure 7 — Modification of design system curve due to outlet system effect

In some cases, the conventional pressure loss p_c cannot be estimated or is not relevant, like for instance with side walls close to the impeller of a plenum fan in the example of 7.2.2.2. In this case, the system effect is due to the disturbed flow in the impeller induced by the proximity of the walls.

6 Examples of inlet SEF

6.1 Introduction

Examples of inlet system effect are taken from different dedicated research programs carried out since the 1990s. The National Engineering Laboratory (NEL) in the UK performed an extensive experimental study on nine different types of fans and six ductwork fittings at the fan inlet. A summary of the test configurations and main results obtained is given in References [3] and [4]. Otherwise, several research programs have been financially supported by ASHRAE in which the tests were performed mainly by AMCA to quantify the SEF on:

— a backward inclined/aerofoil centrifugal fan – ASHRAE Research Project 1216-RP[5];

— a forward curved centrifugal fan – ASHRAE Research Project 1272-RP[6];

— two aerofoil centrifugal plenum fans – ASHRAE Research Project 1420-TRP[7];

— three sizes of propeller fans of the same series – ASHRAE Research Project 1223-RP[8].

Finally, a test was done more recently by AMCA on a forward curved centrifugal fan with an inlet 90° segmented elbow at various orientations.

6.2 Axial fans

6.2.1 Experimental setups

6.2.1.1 NEL

All the tests were performed on a ductwork of D = 630 mm, where D is the duct diameter. A layout of the test ductwork with a bend connected to the fan inlet is shown in Figure 8. The distance between the inlet fitting and the fan is varied from 0D, as in Figure 8 to 2D.

Details of the experimental program and measurement procedure are given in Reference [4] and private reports. The test data used in the present analysis are the performance curves of the fan alone and fan + inlet fitting and the measured pressure losses of the fittings. All the fan curves, initially based on total pressure, were transformed into static pressure curves by subtracting the dynamic pressure at the fan outlet according to ISO 5801.

© ISO 2024 – All rights reserved

Documents
Document Sharing Hub
Full document details: PD ISO/TR 16219:2024

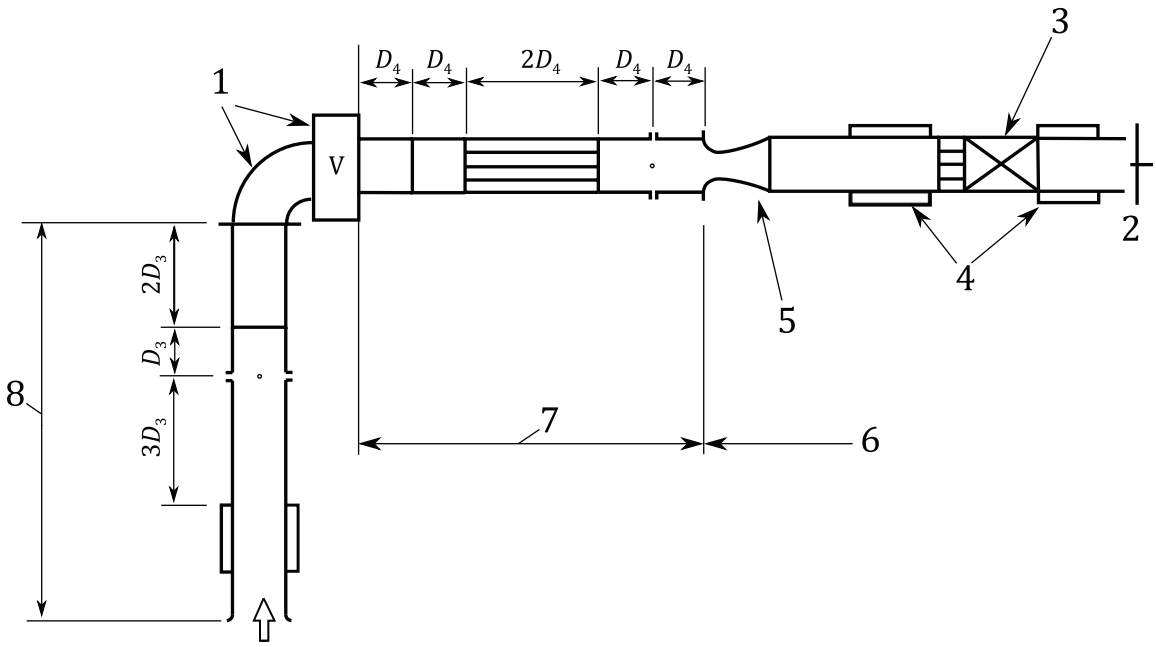

Key

1 test fan and fitting
2 throttle
3 auxiliary boost fan
4 silencers
5 flow measurement nozzle
6 flow measurement and control section
7 outlet duct
8 inlet duct

SOURCE Based on content from National Engineering Laboratory (NEL) Fan Connected Ductwork Study for FETA (FET001) February 1992, reproduced with permission from the Fan Manufacturers Association, FETA UK.

Figure 8 — Test rig for determination of installation effect — Fitting at fan inlet

Table 1 gives the main characteristics of the axial fans tested by NEL while Figure 9 shows views of the fans, including centrifugal fans. Figure 10 presents sketches of the fittings that were connected to the fan inlet (or outlet) via transition elements.

They include:

a) rectangular/circular transition, section 800 × 400 → D = 630 mm, length 950 mm;

b) short square bend 90°, section 630 × 630, curvature radius 100 mm;

c) square mitred bend 90°, section 630 × 630, with guide vanes;

d) circular five-piece segmented bend, D = 630 mm;

e) rectangular to rectangular box fitting, section 800 × 400, length 2 400 mm;

f) rectangular splitter silencer, section 800 × 400, length 1 200 mm;

g) banjo connector, section 1 260 × 630, length 1 890 mm.

© ISO 2024 – All rights reserved

Documents
Document Sharing Hub
Full document details: PD ISO/TR 16219:2024

Table 1 — Main characteristics of the axial fans tested by NEL

Fan	Fan type	Blade setting °	Hub/tip ratio	Speed r/min
1	tubeaxial	24	0,223	1 440
2	tubeaxial	30	0,223	1 440
3	vaneaxial	24	0,389	1 440
4	vaneaxial	32	0,389	1 440
5	tubeaxial	24	0,389	2 900
6	tubeaxial	32	0,389	2 900

NOTE All the fans have a diameter of 630 mm.

SOURCE: Based on content from National Engineering Laboratory (NEL) Fan Connected Ductwork Study for FETA (FET001) February 1992, reproduced with permission from the Fan Manufacturers Association, FETA UK.

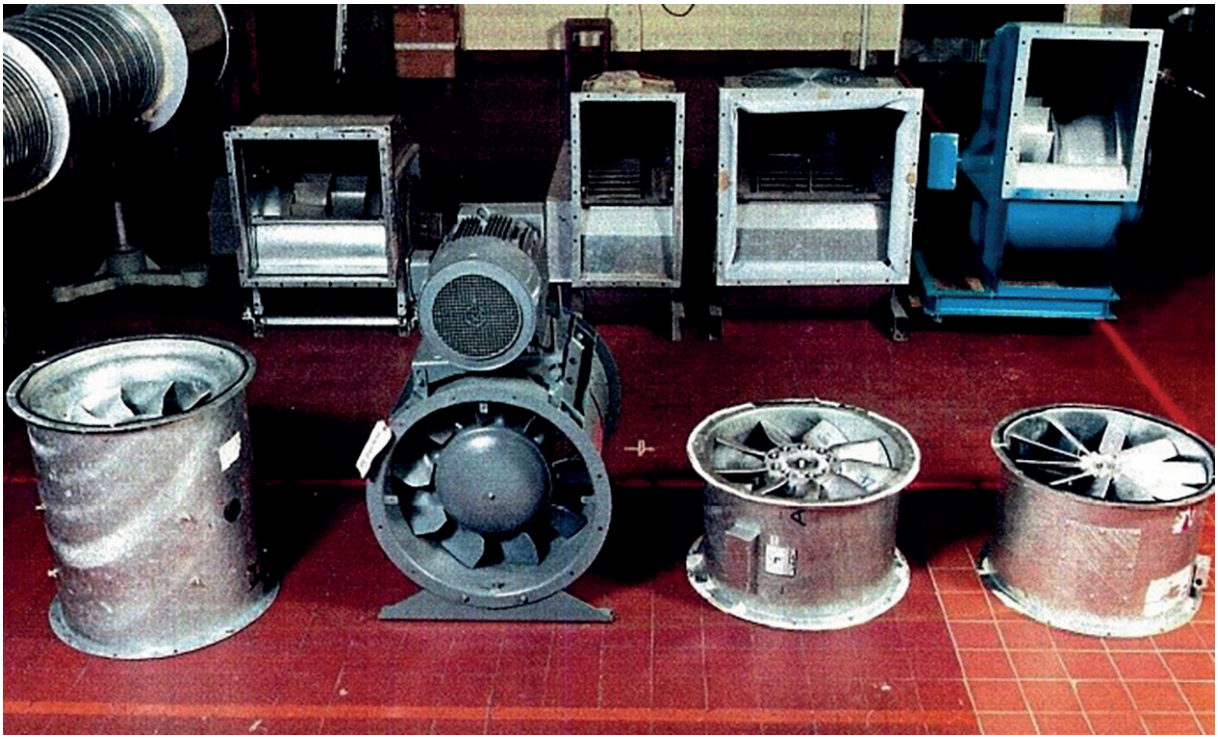

SOURCE Based on content from National Engineering Laboratory (NEL) Fan Connected Ductwork Study for FETA (FET001) February 1992, reproduced with permission from the Fan Manufacturers Association, FETA UK.

Figure 9 — Views of the NEL test fans

© ISO 2024 – All rights reserved

Documents
Document Sharing Hub
Full document details: PD ISO/TR 16219:2024

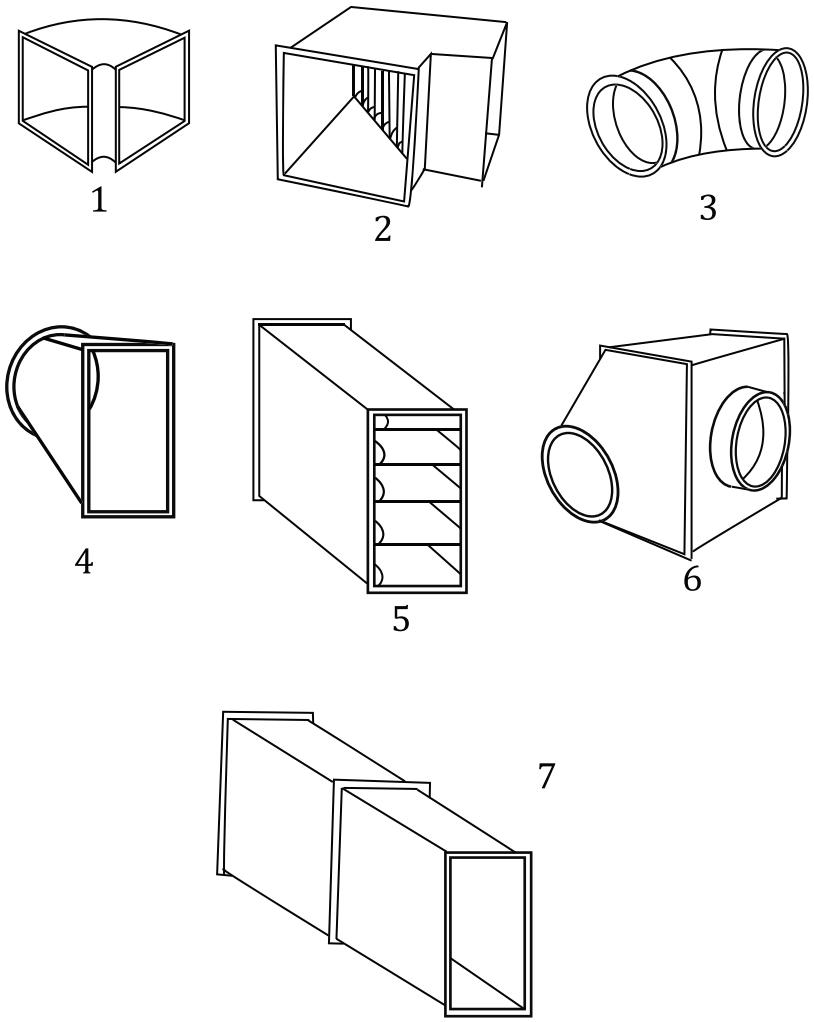

Key

1 short square bend 90°

2 square mitred bend 90°

3 circular five-piece segmented bend

4 rectangular/circular transition

5 rectangular splitter silencer

6 banjo connector

7 rectangular to rectangular box fitting

SOURCE Based on content from National Engineering Laboratory (NEL) Fan Connected Ductwork Study for FETA (FET001) February 1992, reproduced with permission from the Fan Manufacturers Association, FETA UK.

Figure 10 — NEL fittings

6.2.1.2 ASHRAE 1223-RP

This project dealt with the inlet installation effect on three propeller fans of diameters D = 610 mm, 914 mm and 1 219 mm each running at two speeds. The speeds range from 259 r/min to 908 r/min, according to the diameter. The inlet fittings are:

— a 90° round mitred elbow with five angular positions ranging from 0° to 270° (Figure 11);

— three round inlet ducts with contraction area ratios of 1,0, 1,25 and 1,5 (Figure 12);

— a wall at several distances ranging from 0,25*D* to 2*D* in front of the fan inlet (Figure 13).

© ISO 2024 – All rights reserved

Documents
Document Sharing Hub
Full document details: PD ISO/TR 16219:2024

Details of the experimental setups are presented in Reference [8].

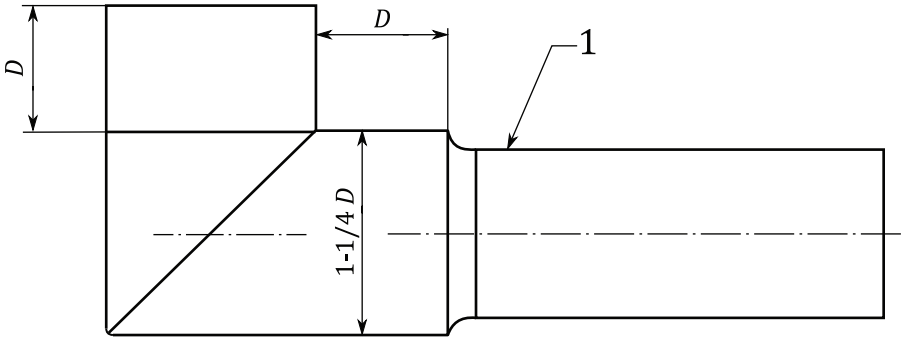

Key

1 basic fan set up

SOURCE Based on content from © ASHRAE http://www.ashrae.org Research Project Report 1223-RP, Inlet Installation Effects on Propeller Fans, Air and Sound, 2009, reproduced with permission from the American Society of Heating, Refrigeration and Air Conditioning Engineers.

Figure 11 — 90° Round mitred elbow

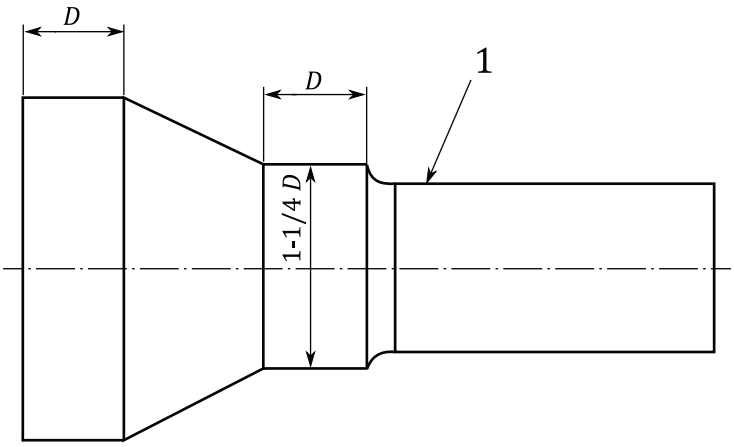

Key

1 basic fan set up

SOURCE Based on content from © ASHRAE http://www.ashrae.org Research Project Report 1223-RP, Inlet Installation Effects on Propeller Fans, Air and Sound, 2009, reproduced with permission from the American Society of Heating, Refrigeration and Air Conditioning Engineers.

Figure 12 — Inlet duct with contraction

© ISO 2024 – All rights reserved

Documents
Document Sharing Hub
Full document details: PD ISO/TR 16219:2024

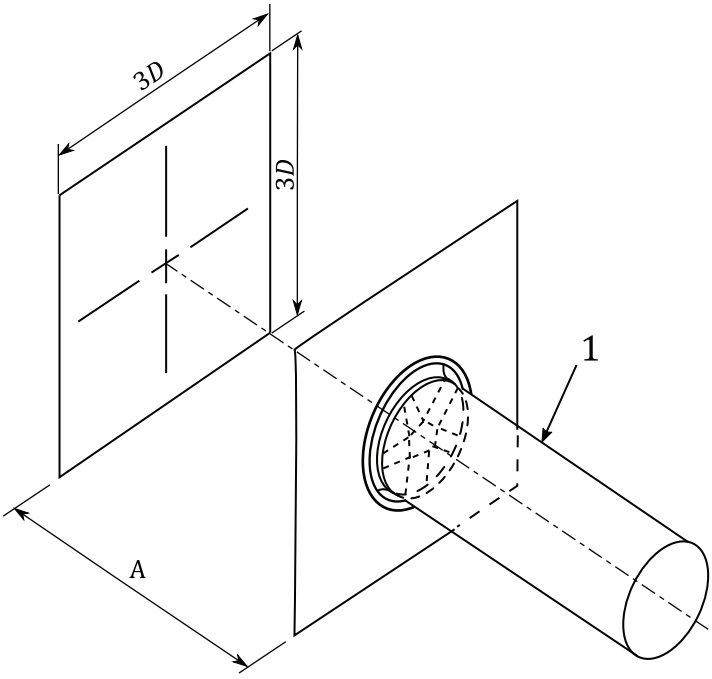

"A"	
1/4	D
1/2	D
3/4	D
1	D
1–1/4	D
1–1/2	D
2	D

Key

1 basic fan set up

SOURCE Based on content from © ASHRAE http://www.ashrae.org Research Project Report 1223-RP, Inlet Installation Effects on Propeller Fans, Air and Sound, 2009, reproduced with permission from the American Society of Heating, Refrigeration and Air Conditioning Engineers.

Figure 13 — Wall in front of the fan inlet

6.2.2 Results

6.2.2.1 Introduction

As stated in 5.1, the SEF due to inlet fittings is the relative flow drop $\Delta q_{V1}/q_{V1}$ averaged over the flow range. If the pressure loss of the appurtenance is known, it is added for each flow rate increment to the fan + fitting curve in order to quantify the system effect due only to the degradation of the fan curve by the flow distortion induced by the fitting.

In the results analysed below, the pressure losses of the components have been measured (or estimated from a database) in the NEL tests and in ASHRAE 1223-RP for the mitred elbow and the contractions[2)].

2) In the configuration with the wall in front of the fan (Figure 13) there is no pressure drop of the inlet disturber as that is not relevant.

© ISO 2024 – All rights reserved

Documents
Document Sharing Hub
Full document details: PD ISO/TR 16219:2024

In the following table of results, the inlet SEF is shown as a percentage with the following convention depending on whether the system effect is considered as small, medium or high.

x %	SEF < 5 %
y %	5 % ≤ SEF < 10 %
z %	SEF ≥ 10 %

6.2.2.2 NEL

The pressure loss coefficients of the fittings assessed from NEL measurements with axial fans are presented in Table 2. Except for the rect/circ transition, where the loss coefficient is very low, the coefficients of the 90° bends of various shape are similar.

Table 2 — Pressure loss coefficients of the NEL fittings at the axial fan inlet

Fitting	Pressure loss coefficient
Rect/circ transition (a)	0,07
Short square bend (b)	0,36
Square mitred bend (c)	0,40
Segmented bend (d)	0,32

Table 3 shows the SEF calculated for the axial fans of Table 1 and some of the inlet fittings described in 6.2.1.1 for four gaps *L*/*D* between the component and the fan. The SEF is small or even insignificant in most of the combinations of fans and fittings, except on fan 2 where the SEF is higher with bends (b) and (c). In this case the larger the gap, the lower the SEF.

Table 3 — SEF of axial fans with inlet fittings

		Average $\Delta q_{V1}/q_{V1}$					
		Axial					
	L*/*D	1	2	3	4	5	6
Rect/circ transition (a)	0	*−0,4 %*	*−0,9 %*	*0,0 %*	*−0,1 %*	*−0,3 %*	*−1,2 %*
	0,5						*−0,5 %*
	1	*0,5 %*	*0,1 %*	*0,3 %*	*0,0 %*	*−0,4 %*	*0,3 %*
	2	*−1,0 %*	*0,3 %*	*−0,4 %*	*−0,4 %*	*−0,6 %*	*0,7 %*
Short square bend (b)	0	*3,7 %*	**6,3 %**	*0,9 %*	*2,7 %*	*0,4 %*	*−0,2 %*
	0,5	*2,6 %*	**6,2 %**	*−0,8 %*	*2,0 %*		
	1	*0,3 %*	*3,8 %*	*1,0 %*	*−0,6 %*	*−0,3 %*	*0,6 %*
	2	*0,5 %*	*0,7 %*	*−0,6 %*	*−0,4 %*	*0,3 %*	*−1,2 %*
Square mitred bend (c)	0	*0,2 %*	**6,4 %**	*2,5 %*	*0,0 %*	*2,0 %*	*0,5 %*
	0,5		**5,6 %**	*2,2 %*	*−0,5 %*		
	1	*0,1 %*	**5,4 %**	*1,9 %*	*−0,1 %*	*0,8 %*	*0,5 %*
	2	*−0,2 %*	*2,5 %*	*−0,8 %*	*0,0 %*	*−0,3 %*	*−0,2 %*
Segmented bend (d)	0	*−1,0 %*	*−1,0 %*	*−1,9 %*	*−0,3 %*	*−1,6 %*	*−0,3 %*
	0,5	*1,5 %*	*1,9 %*	*−0,2 %*	*−0,3 %*		
	1	*3,6 %*	*0,6 %*	*0,5 %*	*0,0 %*	*−1,4 %*	*0,9 %*
	2	*1,8 %*	*1,3 %*	*1,0 %*	*−0,9 %*	*−1,3 %*	*−0,7 %*
NOTE Blank cells represent no data.							

© ISO 2024 – All rights reserved

Documents
Document Sharing Hub
Full document details: PD ISO/TR 16219:2024

6.2.2.3 ASHRAE 1223-RP

Table 4 presents the results obtained on the three impellers with the different fittings. For each fan, the SEF has been averaged over the test speeds. The pressure losses of the elbows and contractions have been taken into account to calculate the SEF but the losses at the entrance of these components have not been accounted for, which can be important since there is no inlet bell at the entrance of the ductwork (see Figure 11 and Figure 12). Even if some differences are observed between the results of the three fans for reasons that can be linked to a size effect, the fact that the fans are not absolutely geometrically similar or both, the general trend observed is close.

The influence of the contraction decreases as the area ratio increases from 1 to 1,5. That the SEF is the highest for an area ratio of 1 can be explained by the fact that the pressure loss at the entrance of the fitting is not considered in the calculation. The duct velocity and thus the pressure loss are indeed higher for the area ratio of 1 than for the two other ratios. If this loss is taken into account, the difference between the SEF of the three contraction ratios is very small.

The elbow induces a strong SEF, and its orientation has some influence with a maximum effect obtained at 0° (elbow oriented vertically upwards). The wall in front of the fan inlet has also a strong effect when its distance to the fan is 0,25D. The effect is still not negligible when this distance increases, especially with the propeller of 1 219 mm.

Table 4 — SEF of propeller fans with inlet fittings

	Propeller 610 mm	**Propeller 914 mm**	**Propeller 1 219 mm**
Inlet fittings	**Average $\Delta q_{V1}/q_{V1}$**		
Contraction AR = 1	**5,4 %**	*4,7 %*	**8,9 %**
Contraction AR = 1,25	*2,3 %*	*2,5 %*	*4,6 %*
Contraction AR = 1,5	*0,6 %*	*0,5 %*	*3,1 %*
Elbow oriented 0°	**10,7 %**	**12,7 %**	**13,7 %**
Elbow oriented 45°	**6,7 %**	**11,9 %**	**11,8 %**
Elbow oriented 90°	**5,5 %**	**9,9 %**	**13,3 %**
Wall at 0,25*D*	**17,1 %**	**12,8 %**	**11,3 %**
Wall at 0,5*D*	*4,2 %*	*1,3 %*	**5,7 %**
Wall at 0,75*D*	*3,2 %*	*1,5 %*	**6,1 %**
Wall at 1*D*	*3,6 %*	*1,2 %*	**6,4 %**
Wall at 1,25*D*	*2,6 %*		
NOTE Blank cells represent no data.			

6.3 Centrifugal and mixed-flow fans

6.3.1 Experimental setups

6.3.1.1 NEL

Table 5 gives the main characteristics of the centrifugal and mixed-flow fans tested by NEL. The fittings tested are described in 6.2.1.1. The pressure loss coefficients of these fittings measured by NEL are shown in Table 6.

© ISO 2024 – All rights reserved

Documents
Document Sharing Hub
Full document details: PD ISO/TR 16219:2024

Table 5 — Main characteristics of the centrifugal and mixed-flow fans tested by NEL

Fan	Fan type	Impeller diameter	Speed (r/min)
7	Mixed-flow with guide vanes	630	1 470
8	FC centrifugal, single inlet	630	850
9	BC centrifugal, single inlet	610	2 600
10	FC centrifugal, double inlet	630	850
11	BC centrifugal, double inlet	510	1 800
SOURCE: Based on content from National Engineering Laboratory (NEL) Fan Connected Ductwork Study for FETA (FET001) February 1992, reproduced with permission from the Fan Manufacturers Association, FETA UK.			

Table 6 — Pressure loss coefficients of the fittings

Fitting	Pressure loss coefficient
Rect/circ transition	0,07
Short square bend	0,36
Square mitred bend	0,40
Segmented bend	0,32
Rect splitter silencer	2,42
Banjo connection	4,16

6.3.1.2 ASHRAE 1216-RP

In this project, a backward inclined (BI) aerofoil centrifugal fan of impeller diameter D = 762 mm is tested according to test configuration B with various inlet fittings, i.e. five bearings with their supports (see an example in Figure 14) and two cabinets of heights 2D and 3D and width L varying from 2D to 0,25D (Figure 15). The tests have been carried out at three rotation speeds: 796 r/min, 1 327 r/min and 1 731 r/min. Details of the experimental setups are presented in Reference [5].

SOURCE Reprinted from © ASHRAE www.ashrae.org, Research Project Report 1216-RP, Inlet Installation Effects on Backward Inclined (BI)/Airfoil Centrifugal Fans, Air and Sound, 2011, reproduced with permission from the American Society of Heating, Refrigeration and Air Conditioning Engineers.

Figure 14 — BI centrifugal fan with inlet bearing obstruction

© ISO 2024 – All rights reserved

Documents
Document Sharing Hub
Full document details: PD ISO/TR 16219:2024

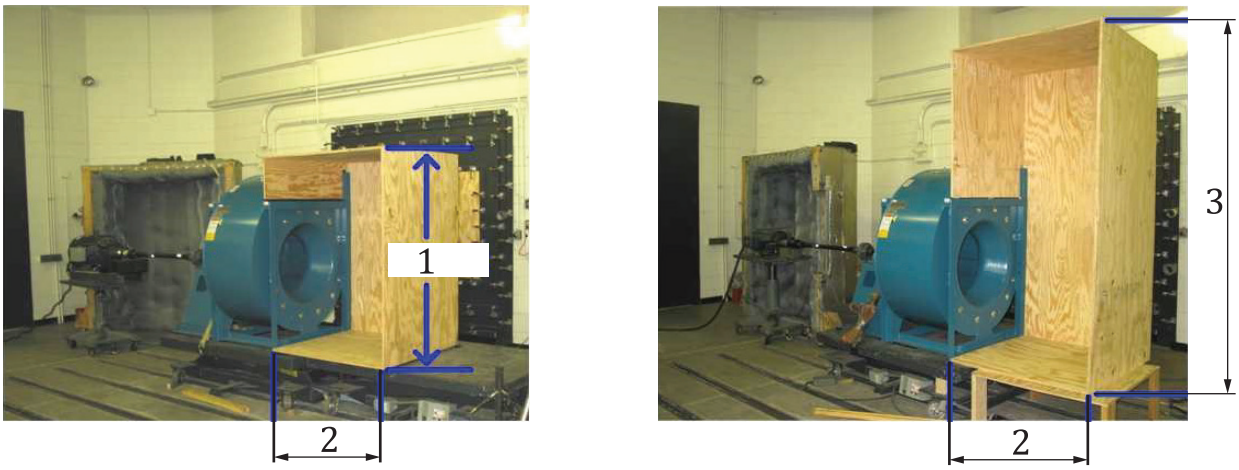

Key

1 2*D* height

2 width *L*

3 3*D* height

SOURCE Reprinted from © ASHRAE www.ashrae.org, Research Project Report 1216-RP, Inlet Installation Effects on Backward Inclined (BI)/Airfoil Centrifugal Fans, Air and Sound, 2011, reproduced with permission from the American Society of Heating, Refrigeration and Air Conditioning Engineers.

Figure 15 — BI centrifugal fan with inlet cabinets 1 (left) and 2 (right)

6.3.1.3 ASHRAE 1272-RP

The objective and the test procedure of this project are similar to those of ASHRAE 1216-RP. The test fan is a forward-curved centrifugal fan of impeller diameter D = 321 mm, and the inlet fittings are four bearings of various types and two cabinets of heights 2*D* and 3*D* and width *L* varying from 2*D* to 0,25*D*. The test speeds are 1 000 r/min, 1 500 r/min and 2 000 r/min. Details of the test setup are shown in Reference [6]. Figure 16 shows a view of the fan with inlet cabinet 1*D* of 2*D* height.

© ISO 2024 – All rights reserved

Documents
Document Sharing Hub
Full document details: PD ISO/TR 16219:2024

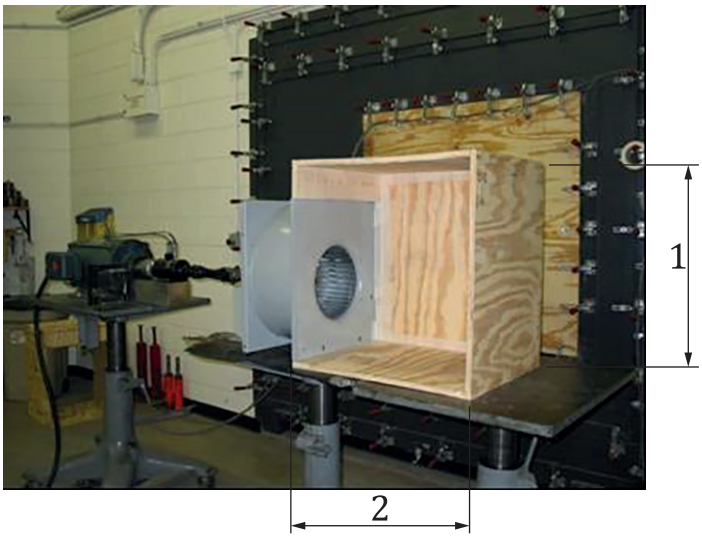

Key

1 2*D* height

2 width *L*

SOURCE Reprinted from © ASHRAE www.ashrae.org, Research Project Report 1272-RP, Inlet Installation Effects on Forward Curved Centrifugal Fans, Performance Air and Sound, 2010, reproduced with permission from the American Society of Heating, Refrigeration and Air Conditioning Engineers.

Figure 16 — FC Centrifugal Fan with inlet cabinet 1

6.3.1.4 ASHRAE 1420-TRP

This project was carried out on two aerofoil centrifugal plenum fans of impeller diameters *D* = 381 mm and 686 mm, according to test configuration A (Figure 17). The rotation speeds are 3 150 r/min for the small impeller and 1 575 r/min for the large impeller. For each fan the system effects due to inlet fittings were determined. Details of the test setup are presented in Reference [7].

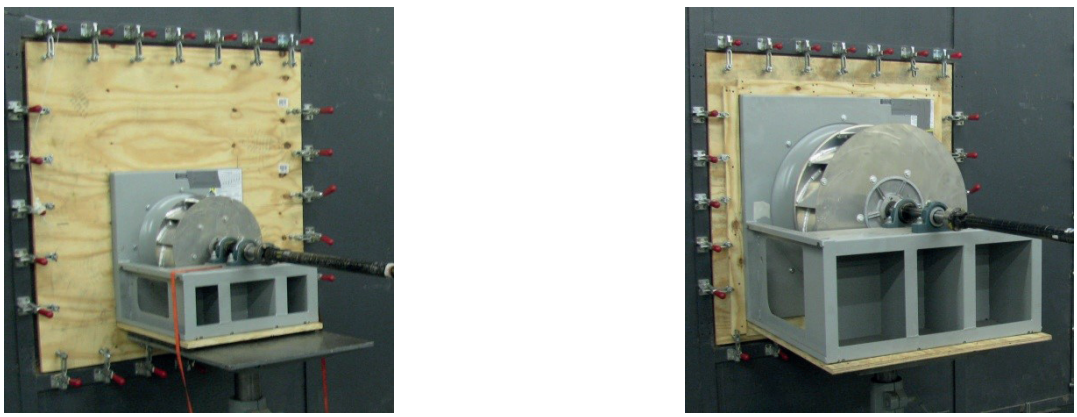

SOURCE Reprinted from © ASHRAE www.ashrae.org, Research Project Report 1420-RP, Inlet and Discharge Installation Effects on Airfoil (AF) Centrifugal Plenum/Plug Fans for Air and Sound Performance, 2014, reproduced with permission from the American Society of Heating, Refrigeration and Air Conditioning Engineers.

Figure 17 — Views of the two centrifugal impellers

For each fan the inlet appurtenances are:

— a pillow block bearing with support (Figure 18);

© ISO 2024 – All rights reserved

Documents
Document Sharing Hub
Full document details: PD ISO/TR 16219:2024