PD ISO/TR 17529:2014

BSI Standards Publication

Machine tools — Practical guidance and example of risk assessment on electro-discharge machines

bsi.

...making excellence a habit.™

Document Sharing Hub

National foreword

This Published Document is the UK implementation of ISO/TR 17529:2014.

The UK participation in its preparation was entrusted by Technical Committee MTE/1, Machine tools, to Subcommittee MTE/1/1, Machine tools - Safety.

A list of organizations represented on this committee can be obtained on request to its secretary.

This publication does not purport to include all the necessary provisions of a contract. Users are responsible for its correct application.

© The British Standards Institution 2014.
Published by BSI Standards Limited 2014

ISBN 978 0 580 85727 0
ICS 25.080.01

Compliance with a British Standard cannot confer immunity from legal obligations.

This Published Document was published under the authority of the Standards Policy and Strategy Committee on 30 November 2014.

Amendments issued since publication

Date	Text affected

Documents
Document Sharing Hub

Full document details: PD ISO/TR 17529:2014

TECHNICAL REPORT

ISO/TR 17529

First edition
2014-11-15

Machine tools — Practical guidance and example of risk assessment on electro-discharge machines

Machines-outils — Lignes directrices et appréciation du risque pour les machines d'électro-érosion

Reference number
ISO/TR 17529:2014(E)

Documents
Document Sharing Hub
© ISO 2014

Full document details: PD ISO/TR 17529:2014

COPYRIGHT PROTECTED DOCUMENT

© ISO 2014

All rights reserved. Unless otherwise specified, no part of this publication may be reproduced or utilized otherwise in any form or by any means, electronic or mechanical, including photocopying, or posting on the internet or an intranet, without prior written permission. Permission can be requested from either ISO at the address below or ISO's member body in the country of the requester.

ISO copyright office
Case postale 56 • CH-1211 Geneva 20
Tel. + 41 22 749 01 11
Fax + 41 22 749 09 47
E-mail copyright@iso.org
Web www.iso.org

Published in Switzerland

© ISO 2014 – All rights reserved

Documents
Document Sharing Hub

Full document details: PD ISO/TR 17529:2014

Contents

Page

Foreword ..... **iv**
Introduction ..... **v**
1 Scope **1**
2 Information for the risk assessment **1**
2.1 General 1
2.2 Hazard identification on EDM equipment and EDM systems during the life phases 4
3 Hazard identification **8**
4 Risk estimation, evaluation, and reduction **9**
4.1 Safety requirements and/or protective measures 9
4.2 Protective measures and their verification procedures 9
4.3 Information for use 9
5 Risk estimation methods **10**
5.1 General 10
5.2 Risk estimation according to ISO/TR 14121-2 10
5.3 Risk estimation according to ISO 13849-1 10
5.4 Risk estimation according to ISO 28881 11
5.5 Risk parameter 14
6 Example of risk assessment **16**
Bibliography **23**

© ISO 2014 – All rights reserved

Documents
Document Sharing Hub
Full document details: PD ISO/TR 17529:2014

Foreword

ISO (the International Organization for Standardization) is a worldwide federation of national standards bodies (ISO member bodies). The work of preparing International Standards is normally carried out through ISO technical committees. Each member body interested in a subject for which a technical committee has been established has the right to be represented on that committee. International organizations, governmental and non-governmental, in liaison with ISO, also take part in the work. ISO collaborates closely with the International Electrotechnical Commission (IEC) on all matters of electrotechnical standardization.

The procedures used to develop this document and those intended for its further maintenance are described in the ISO/IEC Directives, Part 1. In particular the different approval criteria needed for the different types of ISO documents should be noted. This document was drafted in accordance with the editorial rules of the ISO/IEC Directives, Part 2 (see www.iso.org/directives).

Attention is drawn to the possibility that some of the elements of this document may be the subject of patent rights. ISO shall not be held responsible for identifying any or all such patent rights. Details of any patent rights identified during the development of the document will be in the Introduction and/or on the ISO list of patent declarations received (see www.iso.org/patents).

Any trade name used in this document is information given for the convenience of users and does not constitute an endorsement.

For an explanation on the meaning of ISO specific terms and expressions related to conformity assessment, as well as information about ISO's adherence to the WTO principles in the Technical Barriers to Trade (TBT) see the following URL: Foreword — Supplementary information.

The committee responsible for this document is ISO/TC 39, *Machine tools*, Subcommittee SC 10, *Safety*.

© ISO 2014 – All rights reserved
Documents
Document Sharing Hub
Full document details: PD ISO/TR 17529:2014

Introduction

This Technical Report gives additional guidance to the manufacturer to use ISO 28881 by showing a process of the risk assessment based on type A and B standards.

Some documents (e.g. technical reports, guidelines) have already been published but they usually describe about the risk assessment only for machines or for control systems. Manufacturers need guidance that covers both aspects of machines and control systems.

This Technical Report deals with risk assessment for machine and control jointly, i.e. the result of the risk assessment carried out for significant hazards listed in ISO 28881:2013, Table 1, including the results of risk reduction by the protective measures described in ISO 28881:2013, Clauses 5 and 6 and the process of the selection of PL_r as described in ISO 28881:2013, 5.2, are shown.

This Technical Report, based on the following International Standards, is worked out in cooperation with JMTBA (Japanese Machine Tool Builder Association) and ISO/TC 39/SC 10.

— ISO 28881;

— ISO 12100;

— ISO 13849-1;

— ISO/TR 14121-2.

© ISO 2014 – All rights reserved

Documents
Document Sharing Hub
Full document details: PD ISO/TR 17529:2014

Machine tools — Practical guidance and example of risk assessment on electro-discharge machines

1 Scope

This Technical Report gives practical guidance on conducting risk assessment for machinery in accordance with ISO 12100, ISO 13849-1, and ISO/TR 14121-2. It describes the method, tools, and examples used to generate ISO 28881, to reduce the risk of potential harm on EDM equipment and EDM systems by persons involved in the design, installation, or modification of machinery (e.g. designers, technicians, safety specialists).

2 Information for the risk assessment

2.1 General

The following points should be considered:

— specifications of the EDM equipment and EDM systems (For example of limits of the machinery, see Table 1.);

— type of machinery (For examples, see Figures 1 and 2.);

— hazards and associated hazardous situations;

— estimated risk for each identified hazard and hazardous situations including intended use and any reasonably foreseeable misuse;

— evaluation of the risk and making decisions about the need for risk reduction.

Eliminate or reduce the risk by means of the three-step method in accordance with ISO 12100:2010, 6.1.

— step 1: inherently safe design measures;

— step 2: safeguarding and/or complementary protective measures;

— step 3: information for use.

© ISO 2014 – All rights reserved

Documents
Document Sharing Hub

Full document details: PD ISO/TR 17529:2014

Table 1 — Example of specifications of the EDM equipment and EDM systems

Items	Wire EDM	Sinker EDM
EDM machine figure	See Figure 1	See Figure 2
Power supply		
Input voltage	200 V a.c., three-phase	200 V a.c., three-phase
Electrical supply capacity	13,5 kVA	13,0 kVA
Compressed air	0,5 MPa to 0,7 MPa Equal to or more than 75 l/min	0,6 MPa
Machine weight	2 000 kg	5 000 kg
Generator		
Type of circuits	Transistor pulse (energy retrieval type)	Transistor pulse
Output voltage	300 V	200 V
Output current	50 A	60 A
Linear axis (X, Y, Z)		
Stroke (mm)	X350 × Y250 × Z220	X300 × Y200 × Z200
Output power	a.c. 0,6 kW	a.c. 1,0 kW
Feeding speed	1 300 mm/min	5 000 mm/min
Z-axis	With brake Without balancer	With brake Without balancer
Rotary axis	Not applicable	C-axis
Output power		a.c. 0,5 kW
Electrode		
Size	Wire diameter: 0,1 to 0,3 [mm]	Not specified
Max. weight	10 kg	50 kg
Automatic tool changer	Not applicable	Applicable
Number of electrodes	1 spool	30 electrodes
Max. weight per electrode	10 kg	10 kg
Workpiece		650 × 450 × 195 mm
Max. size	800 × 600 × 215 mm	650 × 450 mm
Max. weight	500 kg	800 kg
Dielectric fluid		
Material	Water	Oil with flash point more than 60 °C
Container capacity	440 l	350 l
Installation environment		
Temperature	10 °C to 35 °C	10 °C to 35 °C
Relative humidity	35 % to 75 % (no condensation)	35 % to 75 % (no condensation)

© ISO 2014 – All rights reserved
Documents
Document Sharing Hub
Full document details: PD ISO/TR 17529:2014

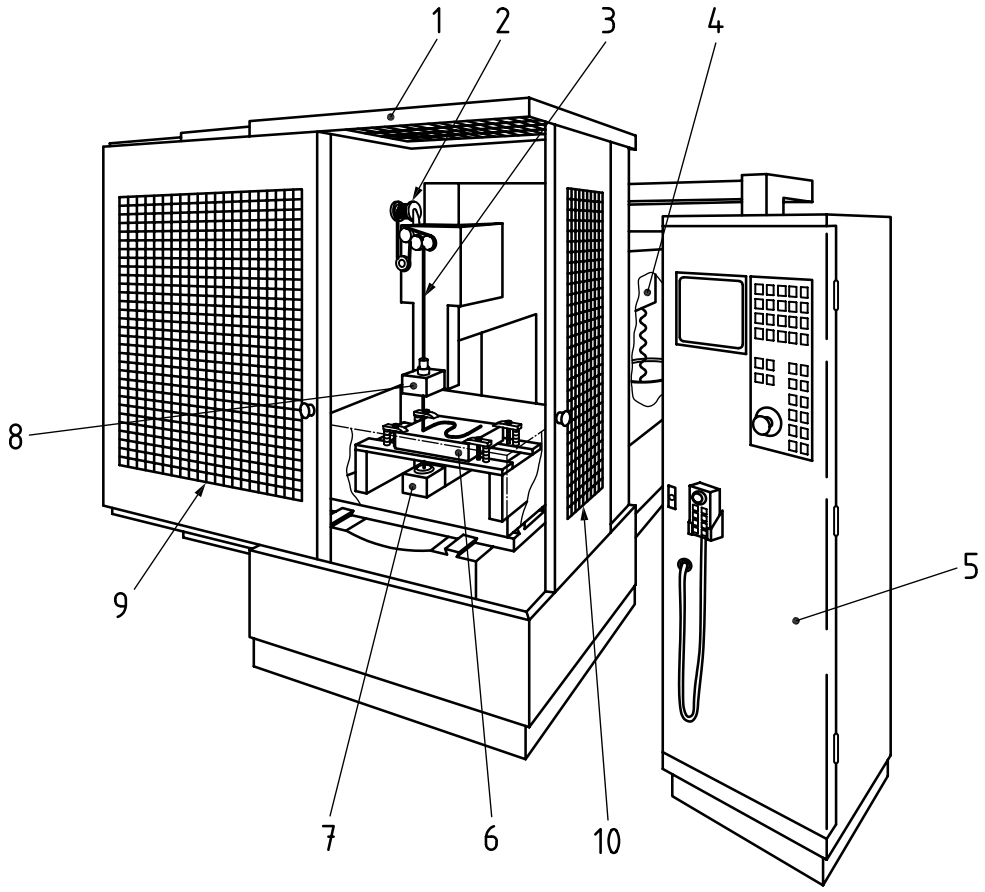

Key

1	shielded enclosure with door(s)	6	workpiece
2	wire supply spool	7	lower wire guide
3	wire electrode	8	upper wire guide
4	wire evacuation	9	interlocking guard
5	electrical cabinet (generator)	10	fix guards

Figure 1 — Example of wire cutting machine

© ISO 2014 – All rights reserved

Documents
Document Sharing Hub
Full document details: PD ISO/TR 17529:2014

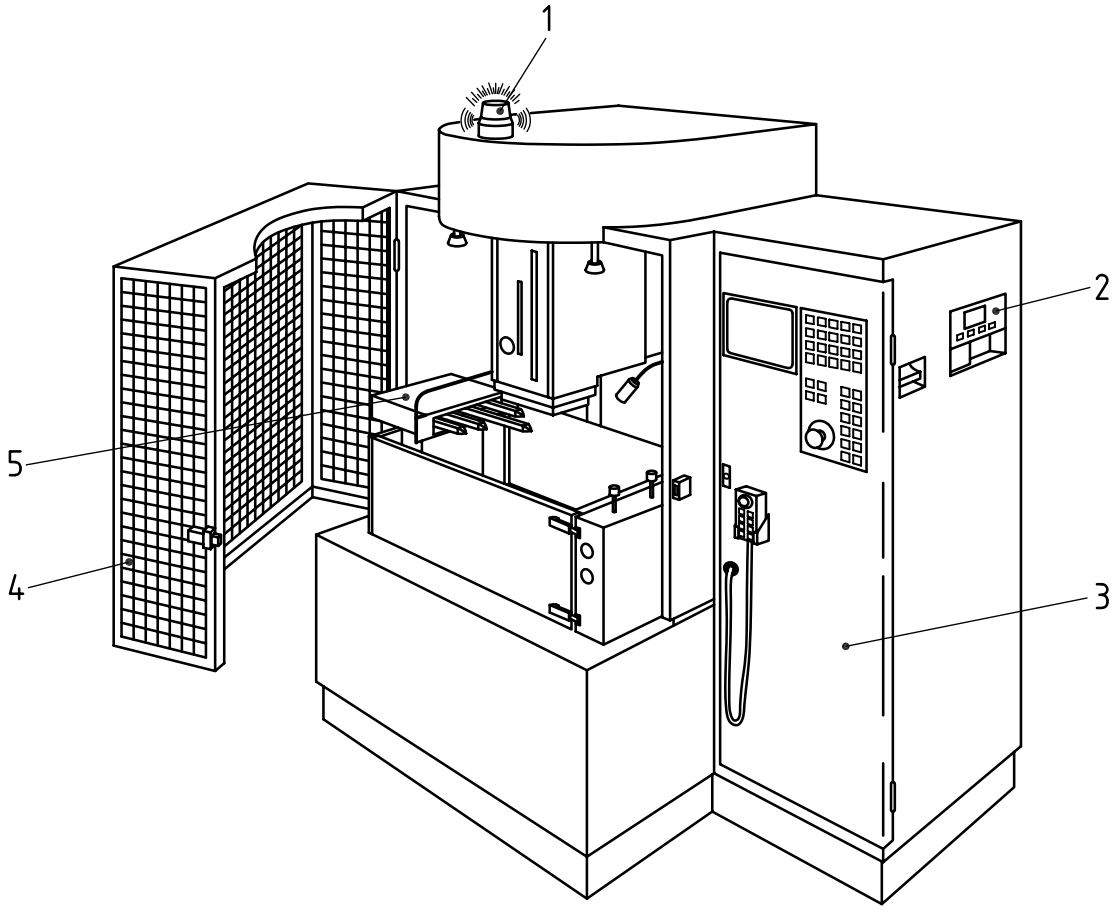

Key

1 local fire alarm
2 fire detection device
3 electrical cabinet (generator)
4 interlocking shielded guard
5 linear electrode changer

Figure 2 — Example of die sinking machine with linear electrode changer

2.2 Hazard identification on EDM equipment and EDM systems during the life phases

2.2.1 Whole life cycle of the EDM equipment and EDM systems

The phases of the life cycle of the EDM equipment and EDM systems considered to be significant in this example are the following:

— transportation (including in-house transport and movement);

— assembly, installation, and commissioning;

— setting and operation;

— cleaning and maintenance;

— fault finding and troubleshooting;

— removal, dismantling, and disposal.

© ISO 2014 – All rights reserved
Documents
Document Sharing Hub
Full document details: PD ISO/TR 17529:2014