PD ISO/TR 18228-5:2025

BSI Standards Publication

Design using geosynthetics

Part 5: Stabilization

Documents
Document Sharing Hub

Full document details: PD ISO/TR 18228-5:2025

National foreword

This Published Document is the UK implementation of ISO/TR 18228-5:2025.

The UK participation in its preparation was entrusted to Technical Committee B/553, Geosynthetics.

A list of organizations represented on this committee can be obtained on request to its committee manager.

Contractual and legal considerations

This publication has been prepared in good faith, however no representation, warranty, assurance or undertaking (express or implied) is or will be made, and no responsibility or liability is or will be accepted by BSI in relation to the adequacy, accuracy, completeness or reasonableness of this publication. All and any such responsibility and liability is expressly disclaimed to the full extent permitted by the law.

This publication is provided as is, and is to be used at the recipient's own risk.

The recipient is advised to consider seeking professional guidance with respect to its use of this publication.

This publication is not intended to constitute a contract. Users are responsible for its correct application.

This publication is not to be regarded as a British Standard.

© The British Standards Institution 2025
Published by BSI Standards Limited 2025

ISBN 978 0 580 85368 5

ICS 59.080.70

Compliance with a Published Document cannot confer immunity from legal obligations.

This Published Document was published under the authority of the Standards Policy and Strategy Committee on 31 January 2025.

Amendments/corrigenda issued since publication

Date	Text affected

Documents
Document Sharing Hub

Full document details: PD ISO/TR 18228-5:2025

Technical Report

ISO/TR 18228-5

First edition
2025-01

Design using geosynthetics —

Part 5: Stabilization

Conception utilisant des géosynthétiques —
Partie 5: Stabilisation

Reference number
ISO/TR 18228-5:2025(en)

© ISO 2025

Documents
Document Sharing Hub

Full document details: PD ISO/TR 18228-5:2025

COPYRIGHT PROTECTED DOCUMENT

© ISO 2025

All rights reserved. Unless otherwise specified, or required in the context of its implementation, no part of this publication may be reproduced or utilized otherwise in any form or by any means, electronic or mechanical, including photocopying, or posting on the internet or an intranet, without prior written permission. Permission can be requested from either ISO at the address below or ISO's member body in the country of the requester.

ISO copyright office
CP 401 • Ch. de Blandonnet 8
CH-1214 Vernier, Geneva
Phone: +41 22 749 01 11
Email: copyright@iso.org
Website: www.iso.org

Published in Switzerland

Documents
Document Sharing Hub
Full document details: PD ISO/TR 18228-5:2025

Contents

Page

Foreword ... **v**
Introduction ... **vi**
1 Scope ... **1**
2 Normative references ... **1**
3 Terms and definitions ... **1**
4 Concepts and fundamental principles ... **1**
4.1 General ... 1
4.2 Benefits ... 3
4.3 Confinement and particle restraint ... 4
4.3.1 General ... 4
4.3.2 Internal confinement — Description of mechanism ... 4
4.3.3 External confinement — Description of mechanism ... 6
4.4 Vehicular action ... 9
4.5 Loading conditions (cyclic and static) ... 9
4.6 Multi component systems ... 10
4.7 Static loads — Settlement control and limitation ... 10
4.8 Reduction in deformation from trafficking ... 10
4.9 Reduction in unbound aggregate degradation ... 10
4.10 Extension of design life ... 11
4.11 Ground and groundwater conditions ... 11
4.12 Climatic conditions ... 11
4.13 Sustainability ... 12
4.14 Impact of filtration, separation and drainage requirements ... 12
5 Typical applications ... **12**
5.1 Stabilized granular (aggregate) layers in trafficked areas ... 12
5.2 Stabilized granular (aggregate) layers in railways ... 13
5.3 Stabilized granular (aggregate) layers in working platforms ... 14
6 Design methods ... **15**
6.1 General ... 15
6.2 Unpaved roads ... 15
6.2.1 Giroud-Han (2004) method ... 15
6.2.2 Leng-Gabr (2006) method ... 17
6.2.3 Pokharel (2010) method for geocells ... 18
6.2.4 Emersleben (2009) method for geocells ... 19
6.3 Paved roads ... 22
6.3.1 Modified American Association of State Highway and Transportation Officials (AASHTO) (1993) method ... 22
6.3.2 MEPDG methods ... 24
6.4 Working platforms and load transfer platforms ... 25
6.4.1 General ... 25
6.4.2 Static method for clay subgrade ... 25
6.4.3 BCR method for soft sand subgrade ... 27
6.5 Railways ... 28
6.5.1 Network Rail (UK) design specifications ... 28
6.5.2 Ev2 method ... 29
6.5.3 Railway ballast stabilization ... 31
6.5.4 Design method for railway stabilization with geocells ... 32
6.6 Design of the geosynthetics layout ... 33
7 Materials ... **36**
7.1 Properties of aggregate ... 36
7.2 Key properties for geosynthetics – Internal confinement ... 36
7.3 Key properties for geosynthetics – External confinement ... 36

© ISO 2025 – All rights reserved

Documents
Document Sharing Hub
Full document details: PD ISO/TR 18228-5:2025

8 Testing **37**
8.1 General 37
8.2 Accelerated pavement tests (APT) 37
8.3 Tests for geotextiles and geogrids 38
8.4 Tests for geocells 38

Annex A (informative) **Tensioned membrane design** **40**

Bibliography **43**

© ISO 2025 – All rights reserved

Documents
Document Sharing Hub
Full document details: PD ISO/TR 18228-5:2025

Foreword

ISO (the International Organization for Standardization) is a worldwide federation of national standards bodies (ISO member bodies). The work of preparing International Standards is normally carried out through ISO technical committees. Each member body interested in a subject for which a technical committee has been established has the right to be represented on that committee. International organizations, governmental and non-governmental, in liaison with ISO, also take part in the work. ISO collaborates closely with the International Electrotechnical Commission (IEC) on all matters of electrotechnical standardization.

The procedures used to develop this document and those intended for its further maintenance are described in the ISO/IEC Directives, Part 1. In particular, the different approval criteria needed for the different types of ISO document should be noted. This document was drafted in accordance with the editorial rules of the ISO/IEC Directives, Part 2 (see www.iso.org/directives).

ISO draws attention to the possibility that the implementation of this document may involve the use of (a) patent(s). ISO takes no position concerning the evidence, validity or applicability of any claimed patent rights in respect thereof. As of the date of publication of this document, ISO had not received notice of (a) patent(s) which may be required to implement this document. However, implementers are cautioned that this may not represent the latest information, which may be obtained from the patent database available at www.iso.org/patents. ISO shall not be held responsible for identifying any or all such patent rights.

Any trade name used in this document is information given for the convenience of users and does not constitute an endorsement.

For an explanation of the voluntary nature of standards, the meaning of ISO specific terms and expressions related to conformity assessment, as well as information about ISO's adherence to the World Trade Organization (WTO) principles in the Technical Barriers to Trade (TBT), see www.iso.org/iso/foreword.html.

This document was prepared by Technical Committee ISO/TC 221, *Geosynthetics*.

A list of all parts in the ISO/TR 18228 series can be found on the ISO website.

Any feedback or questions on this document should be directed to the user's national standards body. A complete listing of these bodies can be found at www.iso.org/members.html.

© ISO 2025 – All rights reserved

Documents
Document Sharing Hub
Full document details: PD ISO/TR 18228-5:2025

Introduction

The ISO 18228 series provides guidance for designs using geosynthetics for soils and below ground structures in contact with natural soils, fills and asphalt. The series contains 10 parts which cover designs using geosynthetics, including guidance for characterization of the materials to be used and other factors affecting the design and performance of the systems which are particular to each part, with ISO/TR 18228-1 providing general guidance relevant to the subsequent parts of the series.

The series is generally written in a limit state format and guidelines are provided in terms of partial material factors and load factors for various applications and design lives, where appropriate.

Ultimate limit state (ULS) design is necessary for some applications, e.g. slab foundation design, working platform design etc., but usually must be proven separately. This document is a state of practice report and information is provided in terms of the application of the mechanisms and design methods. A discussion on separation, filtration and other relevant engineering issues addressed with geosynthetics are addressed in the separate parts of ISO 18228.

This document includes information relating to the stabilization function. Details regarding design methodologies adopted in a number of regions are provided.

© ISO 2025 – All rights reserved

Documents
Document Sharing Hub
Full document details: PD ISO/TR 18228-5:2025

Design using geosynthetics —

Part 5: Stabilization

1 Scope

This document provides a summary of general guidance for the design of geosynthetics to fulfil the function of stabilization of granular layers in contact with natural soils, fills, asphalt or other materials.

The concepts of the summarised guidance are based on installed materials, the installation process and on either the strength or deformation behaviour, or both, of geosynthetics.

This document provides general considerations to support the design of unbound layers of paved and unpaved roads, working platforms and foundations utilizing the stabilization function of geosynthetics. This is typically for the serviceability limit state (SLS).

2 Normative references

The following documents are referred to in the text in such a way that some or all of their content constitutes requirements of this document. For dated references, only the edition cited applies. For undated references, the latest edition of the referenced document (including any amendments) applies.

ISO 10318-1, *Geosynthetics — Part 1: Terms and definitions*

3 Terms and definitions

For the purposes of this document, the terms and definitions given in ISO 10318-1 apply.

ISO and IEC maintain terminology databases for use in standardization at the following addresses:

— ISO Online browsing platform: available at https://www.iso.org/obp

— IEC Electropedia: available at https://www.electropedia.org/

4 Concepts and fundamental principles

4.1 General

There are two primary mechanisms by which geosynthetics can improve the performance of a granular layer, the confinement mechanism and the tensioned membrane mechanism. The distinction between these two mechanisms and their relevant applications must be understood.

The first mechanism provides stabilization by way of particle confinement, or lateral restraint. By minimizing the movement of aggregate particles, confinement increases the shear resistance and widens the load distribution angle, improving the mechanical properties of the granular (i.e. aggregate) layer, thereby controlling deformation under load (i.e. SLS).

The second mechanism provides reinforcement by way of friction, or interlock, or deforming, or a combination of these three, out of the plane under load. In this case, the geosynthetic material is anchored on

© ISO 2025 – All rights reserved

Documents
Document Sharing Hub
Full document details: PD ISO/TR 18228-5:2025

each side of the loaded area to create a tensioned membrane. In doing so, it provides support to the granular (i.e. aggregate) layer, thus decreasing deformations (i.e. SLS) and increasing bearing capacity (i.e. ULS).

Figure 1 illustrates the difference between the two mechanisms.

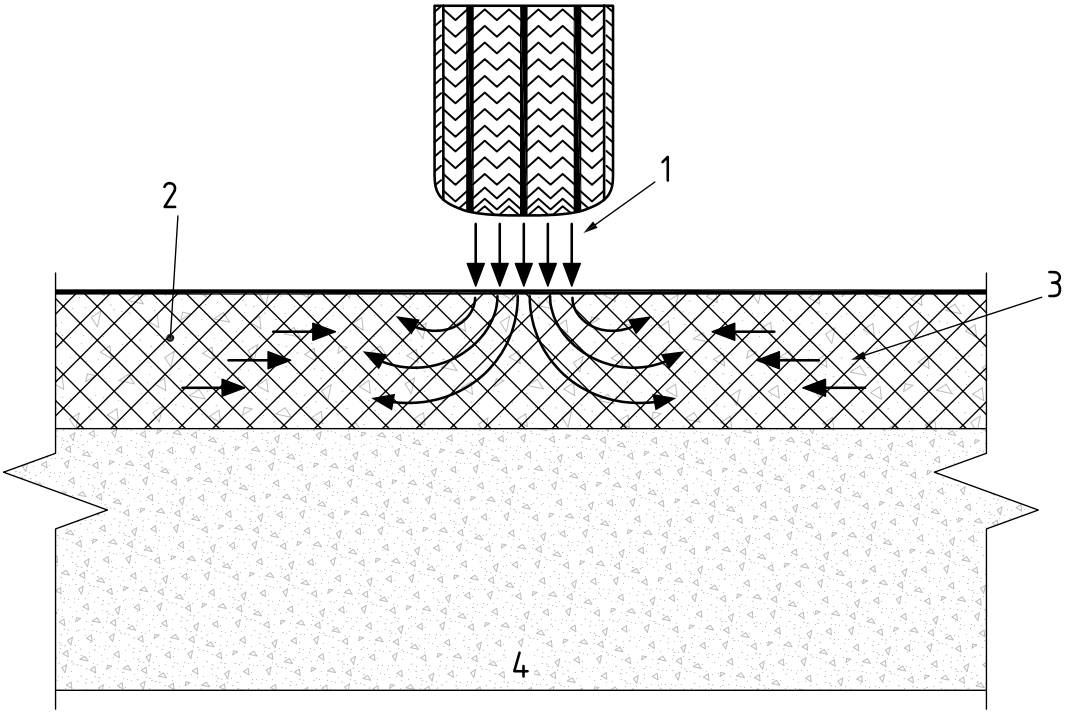

a) Lateral restraint

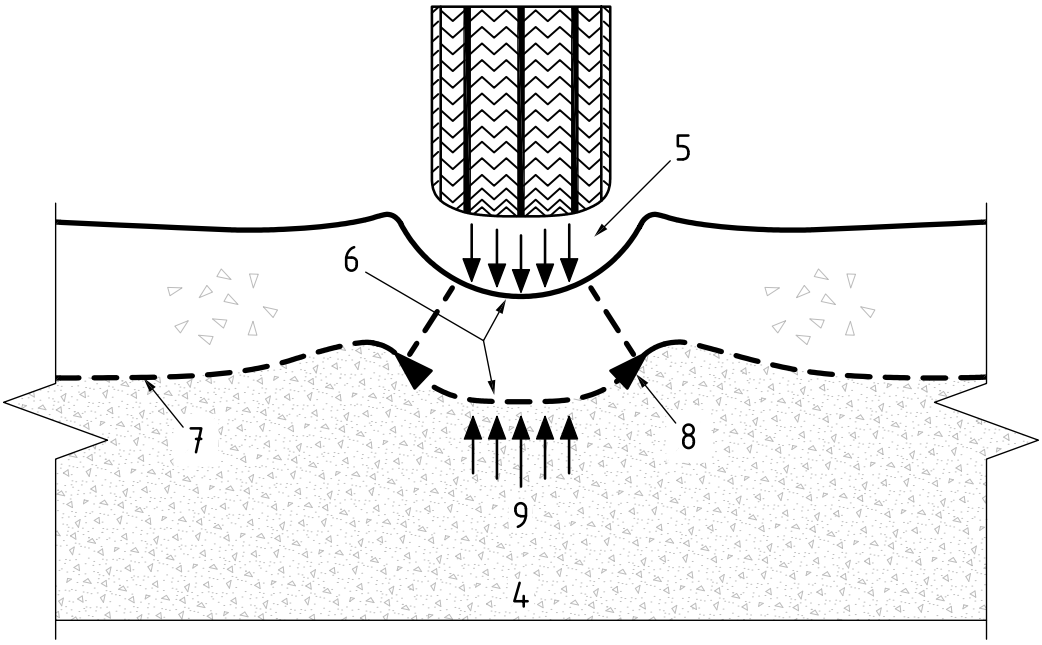

b) Tensioned membrane

© ISO 2025 – All rights reserved

Documents
Document Sharing Hub
Full document details: PD ISO/TR 18228-5:2025

Key

1 wheel load creates stresses which, unchecked, cause strains as shown
2 stabilized composite layer of aggregate and geosynthetic
3 geosynthetic can be within or beneath the layer of aggregate to provide lateral restraint, inhibit strains, and thereby support the vertical load
4 subgrade
5 wheel load
6 wheel path rut
7 geosynthetic
8 membrane tension in geosynthetic
9 vertical support component of membrane

NOTE Figure 1 shows the primary mechanisms by which geosynthetics can improve the performance of a granular layer.

Figure 1 — Mechanisms to improve the performance of a granular layer

In stabilization (i.e. confinement), the geosynthetic operates most effectively at relatively low levels of strain. Stabilization is less influential in designs where high levels of strain are anticipated. Where high levels of strain are anticipated, the tension membrane effect (reinforcement) is dominant.

There is considerable discussion in the literature about the relative magnitude of the strain within the geosynthetic in the stabilization and reinforcement mechanisms. The boundary between the operational strain envelopes of these two mechanisms and the nature of any transition between them has not been adequately defined by any research to date. This is partly because it is extremely difficult to measure the level of strain of a buried geosynthetic. This means that, a universally recognised design methodology based on this parameter is not yet available.

The design life of the project is also suggested as a key consideration and, as a result, the rate of deformation. Designing for geosynthetic stabilization results in the successful control of the rate and level of system deformation to that which is tolerable within the design life of the project.

The tensioned membrane mechanism can require large deformations to mobilize the tensile strength of the geosynthetic for it to be effective. Due to the importance of the tensile strength, the geosynthetic in a tensioned membrane mechanism is considered to be performing a reinforcement function. This is not the only mechanism through which geosynthetics perform the reinforcement function and the reader is referred to ISO/TR 18228-7 where other situations are described. However, because the tensioned membrane mechanism can be used in the application of unpaved roads, for ease of reference, a discussion of the tensioned membrane reinforcement mechanism is provided in Annex A of this document.

4.2 Benefits

Geosynthetics are utilized to facilitate construction and improve the performance of unbound aggregate layers over subgrades of varying strength. The benefits of geosynthetics have been well documented in numerous case histories. These cover the range of full-scale laboratory experiments to instrumented field studies. Many of these are highlighted in the Bibliography. In these cases, the geosynthetic and aggregate together form a stabilized layer.

Further, stabilization of the unbound aggregate leads to an enhancement in both the surface resilient modulus of unbound layers or subgrade and bearing capacity of the stabilized layer. The composite structure of aggregate fill, geosynthetic and subgrade must:

a) effectively withstand service-loading pressures;

b) control subgrade and unbound aggregate layer deformation within a range suited to the in-service requirements;

c) not progressively deteriorate over time through either aggregate deformation, breakdown or contamination.

© ISO 2025 – All rights reserved

Documents
Document Sharing Hub
Full document details: PD ISO/TR 18228-5:2025

The corresponding functions of separation and filtration can also contribute to an improvement in performance where site conditions require them to be provided.

4.3 Confinement and particle restraint

4.3.1 General

Stabilization by geosynthetics necessitates the minimization of particle movement through confinement. Minimization of particle movement is achieved by particle restraint. For geosynthetics to provide particle restraint, they must have adequate tensile stiffness and sufficient interaction with the soil.

Confinement is the dominant stabilization mechanism at low levels of strain (typically less than 1 %, but possibly up to 2 %) of the geosynthetic within or beneath the aggregate layer, depending also on the importance of the stabilized system (e.g. highway versus haul road) and the position of the geosynthetic within the stabilized system (usually at lower levels higher strains are acceptable). If strain values are expected to be above this, the designer can consider whether other mechanisms need to be included. For the purposes of this document, two types of confinement have been considered and named internal and external.

4.3.2 Internal confinement — Description of mechanism

Internal confinement is the intimate interaction of a two-dimensional geosynthetic with aggregate in or underneath a compacted granular layer thereby creating a pseudo-composite material of improved shear strength and stiffness. The interaction can occur via interlock, surface friction or both. For interlock to be effective, the geosynthetic must have apertures (e.g. a geogrid) into which granular particles can penetrate.

While vertically loaded, additional shear stress is transmitted from the aggregate to the geosynthetic which in turn results in deformation (strain) in the geosynthetic. The shear resistance caused by friction and mechanical interlock generates a lateral restraint of the aggregate particles. The stiffness provided by the geosynthetic reduces development of lateral deformation in the base aggregate over a defined height above the geosynthetic (the stabilized or "confined zone") by preventing the development of explicit displacements of the aggregate.

The confined zone has a limited thickness. Above it, a transition zone is developed which extends until there is no influence on the granular (i.e. aggregate) layer from the geosynthetic (i.e. unconfined zone). Figure 2 illustrates the various zones.

The efficiency of confinement and thickness of the confined and transition zones varies with different geosynthetic and soil types. The details therefore are usually defined for each type of geosynthetic and soil individually. From Figure 2 it is evident that, when a relatively high aggregate thickness is required, designing with multiple layers of geosynthetics allows a reduction in or elimination of the unconfined zone, thus affording a more effective stabilization.

The magnitude by which the horizontal and vertical strain in the aggregate layer can be reduced depends on the stiffness of the composite layer. This is, in turn, a function of the geosynthetic tensile stiffness required for the stress equilibrium (especially at low strain levels) as well as on the efficiency of the aggregate and geosynthetic interaction.

During the application of load to the granular (i.e. aggregate) layer (e.g. trafficking or compaction), the interaction discussed above distributes stress throughout the stabilized granular (aggregate) layer and geosynthetic, thus reducing any stresses transmitted to the underlying subgrade. The limitation of movement under load provided in this way via a geosynthetic is referred to as the provision of lateral restraint.

The creation of the confined zone with limited particle movement naturally limits the deformation of the granular (i.e. aggregate) layer as a whole. The resultant reduced stress transmission to the subgrade limits its deformation. It is typically the underlying subgrade that is the weakest material in the construction section and one of the principle aims in developing a confined and stabilized granular (i.e. aggregate) layer is to limit any stress and strain transmission to this weaker layer.

© ISO 2025 – All rights reserved

Documents
Document Sharing Hub
Full document details: PD ISO/TR 18228-5:2025

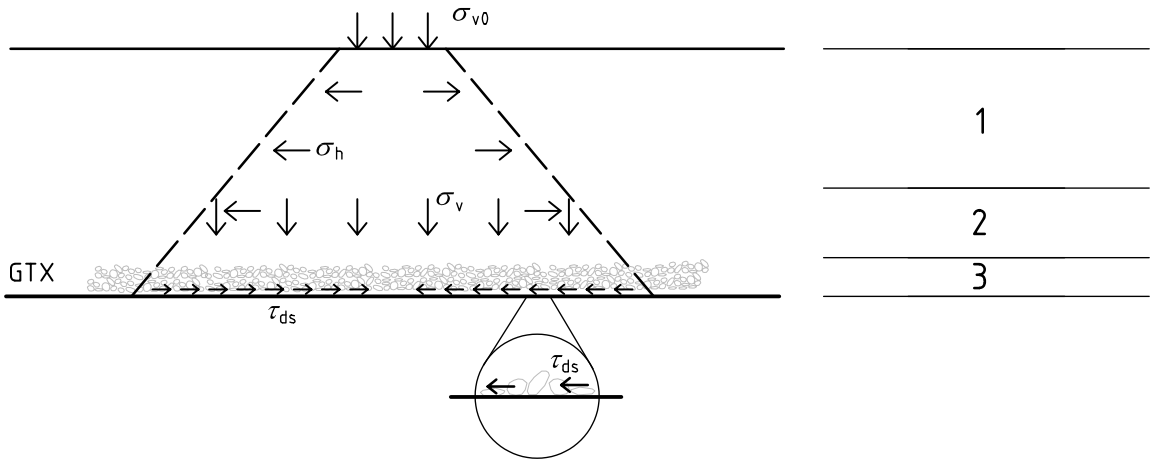

a) Interaction by direct shear only

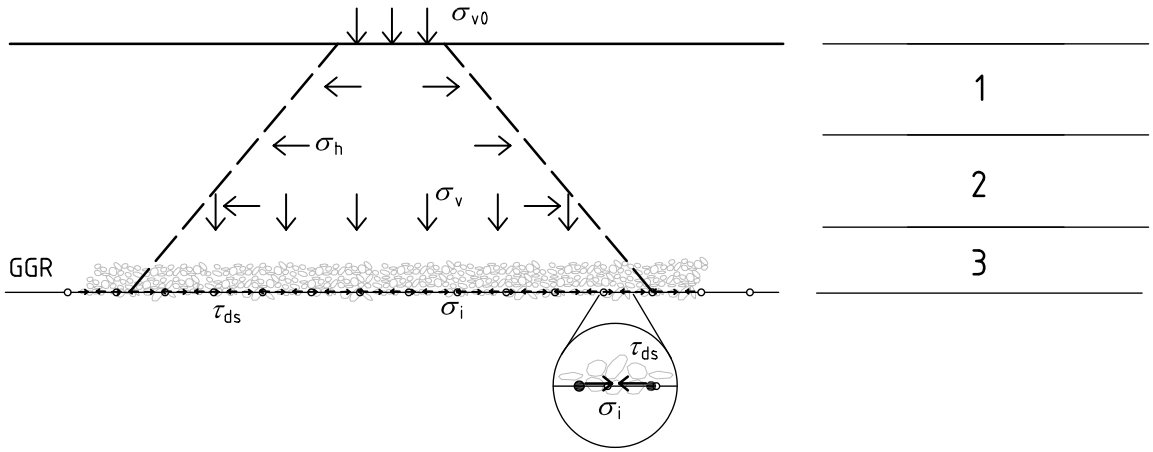

b) Interaction by direct shear, interlocking or both

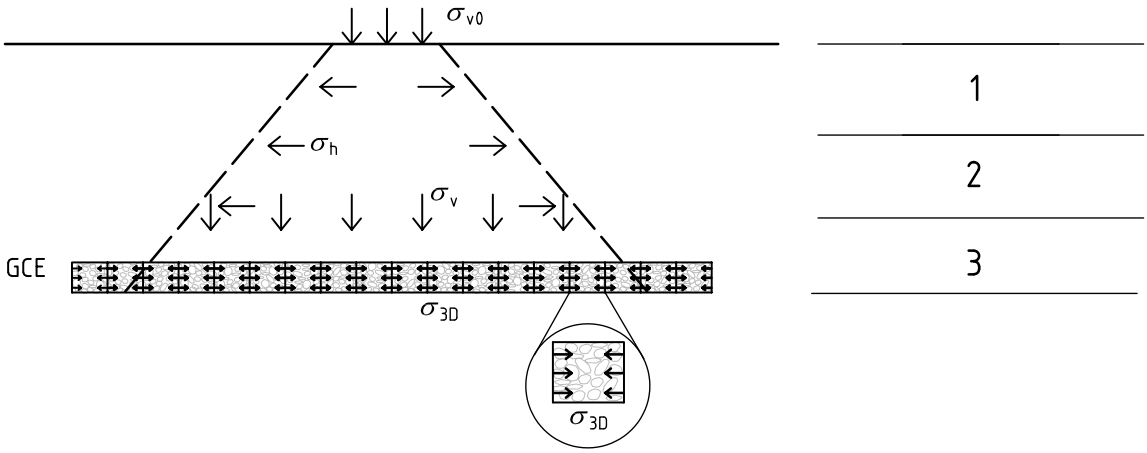

c) Interaction with geocell

Key

σ_{v0}	vertical stress applied at the top surface
σh	horizontal stress
σv	vertical stress at the subgrade interface
τds	direct shear stress
σi	interlocking confining stress
GTX	geotextile

© ISO 2025 – All rights reserved

Documents
Document Sharing Hub
Full document details: PD ISO/TR 18228-5:2025

GGR geogrid
GCE geocells
1 unconfined zone
2 transition zone
3 confined zone

Figure 2 — Interaction of granular (aggregate) material with geosynthetics

Reducing the horizontal strain leads to a decrease in the Poisson ratio of the soil and geosynthetic composite material compared to the Poisson ratio of the unstabilized soil. Reducing the Poisson ratio increases the horizontal stiffness which means that the geosynthetic stabilized soil layer is able to distribute the vertical stresses σ_{v0} applied at the top surface on a wider area, as shown in Figure 3.

In terms of the well-known concept of load distribution angle, for the unstabilized soil layer the vertical stress on the subgrade σ_{vu} will have a load distribution angle α_u [Figure 3a)]; while for the two dimensional and three-dimensional geosynthetic stabilized soil layer, the vertical stress on the subgrade σ_{vs} will have a much wider and more uniform distribution according to the increased load distribution angle α_s [Figures 3b) and 3c)].

On the other hand, it is evident that at equal maximum value of σ_{vu} and σ_{vs}, the load that the stabilized soil layer can support will be much higher than the load supported by the unstabilized soil layer. In other words, the improved vertical load distribution on the subgrade affords a higher bearing capacity of the stabilized system compared to that of the unstabilized system.

These concepts have been demonstrated by research and monitored stabilized versus unstabilized soil layers under different types of loads and are widely used in the presently available design methods.

4.3.3 External confinement — Description of mechanism

External confinement occurs when a volume of material is confined by a three-dimensional geosynthetic system, which can be made of a geocell or a factory or in-situ three-dimensional assembling of geosynthetic components. For ease of use, reference will be made to geocells only in this document, although the details apply equally to the factory and in-situ 3D assembling of geosynthetic components.

The geocell stabilization mechanism limits horizontal infill soil deformation via the geocell walls, thereby confining the infill soil. The limitation of horizontal deformation is based on four factors.

a) Hoop tension forces in the cell walls.

b) Resistance from the surrounding cells.

c) Friction between cell walls and infill material.

d) Connection strength of joined walls.

Under vertical load, horizontal earth pressure is restrained by the cell walls. The resulting strains in the cell walls mobilize hoop stresses within the loaded cell (Figure 4). The magnitude of the activated hoop stress depends on the geocell material, stress-strain behaviour, magnitude of load, number of load cycles, location of the applied load, type and properties of infill material, and the foundation characteristics.

The hoop stresses and resistance provided by surrounding cells restrict lateral deformation of the fill by producing confining stresses σ_{3D} [Figure 3c)]. The intensity of the confining stresses depends on the height to diameter ratio of the geocell, the height of surcharge and the tensile properties of the geocell.

The confined zone shown in Figure 3c) includes two parts.

1) Cell height.

2) Limited thickness above and, possibly, beneath the geocell.

© ISO 2025 – All rights reserved

Documents
Document Sharing Hub
Full document details: PD ISO/TR 18228-5:2025

Above the confined zones, a transition zone is developed which extends until there is no influence on the granular (i.e. aggregate) layer from the geocell (i.e. unconfined zone). Figure 3c) illustrates the increased load spread angle under load.

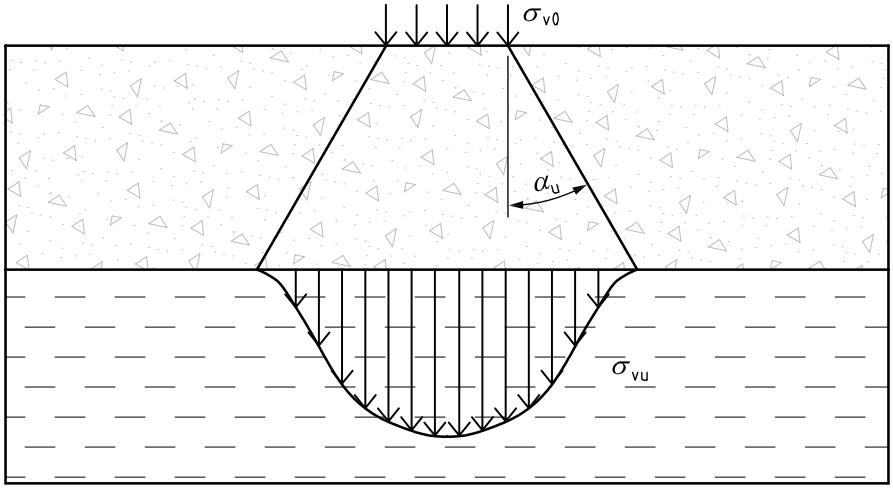

a) Unstabilized granular (aggregate) layer

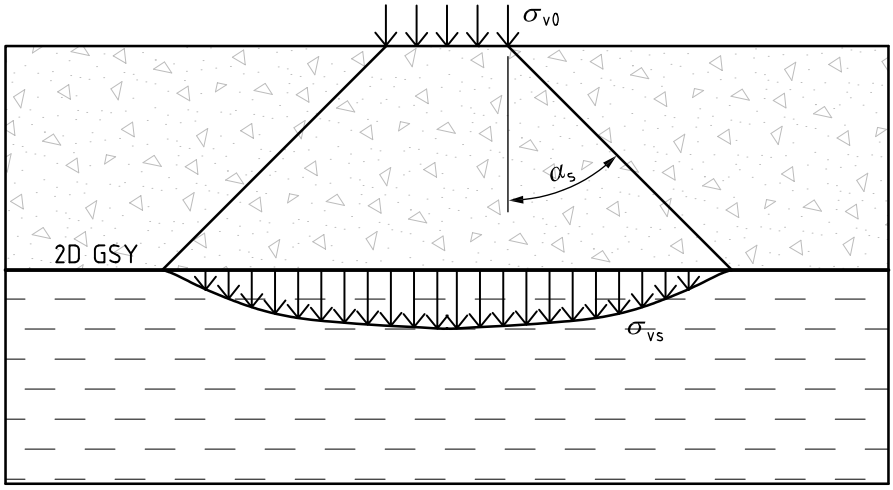

b) Two-dimensional confinement of granular (aggregate) layer

© ISO 2025 – All rights reserved

Documents
Document Sharing Hub
Full document details: PD ISO/TR 18228-5:2025

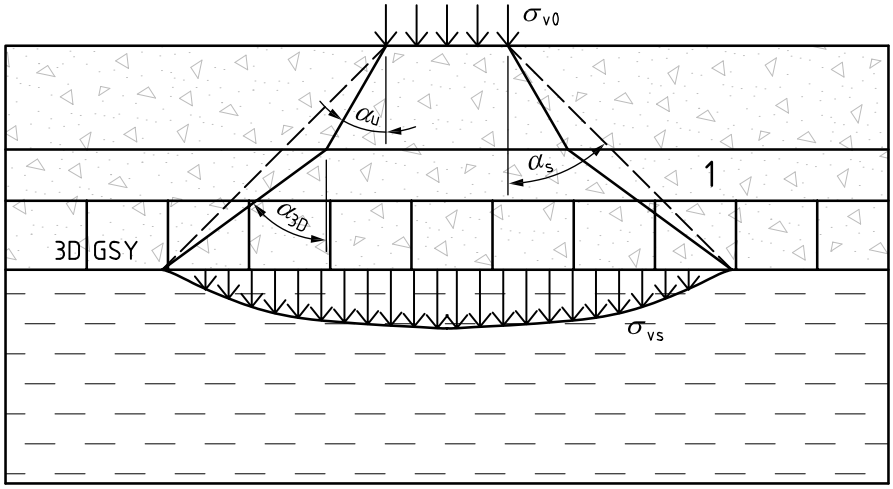

c) Three-dimensional confinement of granular (aggregate) layer

Key

$\sigma v0$ vertical stress applied at the top surface

σ_{vu} vertical stress on the subgrade with unstabilized granular (aggregate) layer

σ_{vs} vertical stress on the subgrade with stabilized granular (aggregate) layer

α_u load spreading angle with unstabilized granular (aggregate) layer

α_s load spreading angle with stabilized granular (aggregate) layer

α_{3D} load spreading angle within three-dimensional structure

1 confined zone

Figure 3 — Increase of the load distribution angle for bearing capacity increase

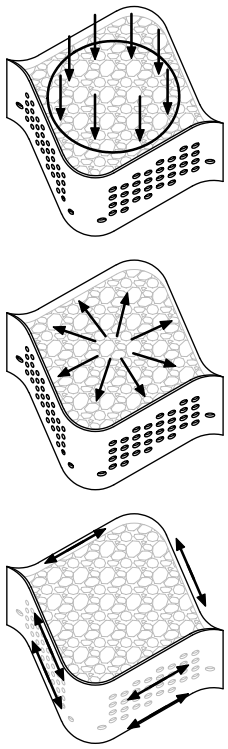

a) External vertical stress

b) Lateral stress on cell walls

c) Lateral confinement or restraint — Hoop tensile stress in cell walls

Figure 4 — Confinement mechanisms in geocells: Development of cell hoop stress by external vertical stress

© ISO 2025 – All rights reserved

Documents
Document Sharing Hub
Full document details: PD ISO/TR 18228-5:2025

4.4 Vehicular action

Vehicular loads applied to the road surface create stresses within the aggregate. As the wheels approach and then pass a given location along the pavement, the main principal stress for an individual aggregate particle is increasing and additionally rotating. This stress rotation is linked to a strong horizontal force component (i.e. shear stress), which finally leads to lateral spreading (i.e. shear strain) of the base aggregate particles. Geosynthetics are used to limit these deformations and the adverse effects related to it (e.g. surface rutting and decrease of bearing capacity).

When the unbound aggregate is installed and compacted on top of geosynthetics, shear resistance is generated between the two components because of frictional interaction. Other modes of interaction can be based on aperture interlocking (for geogrids) or cell and confinement fixation (for geocells). In such cases, granular soil particles can partially penetrate through the geogrid apertures or into the geocells and interlock with them.

One or both interaction mechanisms, friction or interlocking, are a prerequisite for limiting lateral movement of the aggregate particles on top of the geosynthetic. At the initial stage, where the fill material above the installed geosynthetic is compacted, the geosynthetic can be put into tension which causes development of corresponding strain and stress. The amount of strain depends on several factors, with the main factors being the stiffness of the subsoil, the degree and efficiency of interaction between aggregate and geosynthetic and intrinsic properties of the geosynthetic, in particular the stiffness.

4.5 Loading conditions (cyclic and static)

For some of the systems under discussion, the loading conditions immediately beneath the surface are cyclic. As vehicles continue to traffic a pavement overlying unbound aggregate the stress distribution angle within the unbound aggregate typically decreases (see Figure 5) due to cyclic loading. The accumulation of plastic deformations due to loading and unloading cycles normally leads to a reduction of the shear strength of the base course material. As a result, the maximum stress at the base and subgrade interface tends to increase over time.

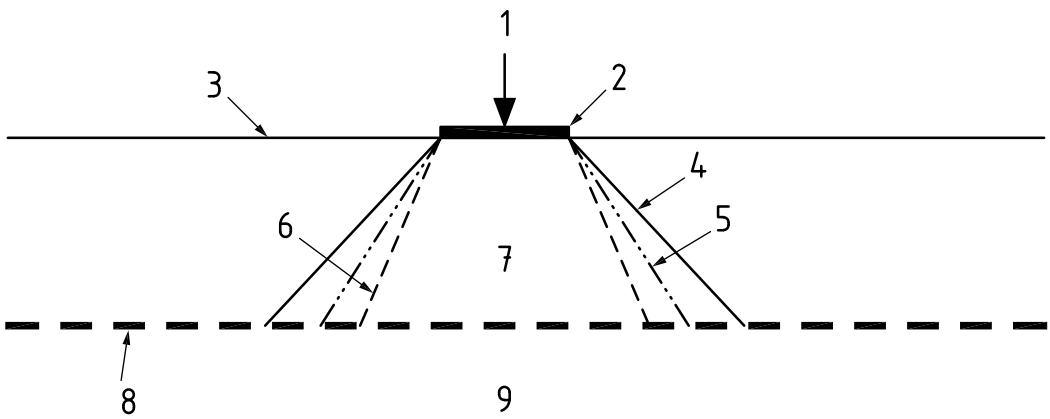

Key

1 wheel load, *P*
2 tyre contact area
3 surface
4 initial distribution
5 distribution after N passes
6 distribution at failure
7 base
8 geosynthetic
9 subgrade

NOTE See Reference [1] for further information.

Figure 5 — Stress distribution angle

Bearing capacity failure of the subgrade occurs when the stress distribution angle decreases to a point at which the stress at the interface exceeds the mobilized shear strength of the subgrade.[1] The utilised shear

© ISO 2025 – All rights reserved

Documents
Document Sharing Hub
Full document details: PD ISO/TR 18228-5:2025

strength of the subgrade depends on the undrained shear strength of the subgrade, the surface deformation or rut depth, the tyre contact area, and the thickness of the base.[1]

Under static loading conditions, the load distribution angle remains the same over time for an uncontaminated layer of unbound aggregate.

4.6 Multi component systems

Multi-component geosynthetic systems typically increase the thickness of the stabilized layer and provide improved confinement. As a result, a multi-component geosynthetic system normally results in improved performance.

A multi-component system can be either multiple layers of the same geosynthetic which provide either internal or external confinement only, or one which contains layers of different geosynthetics, thereby providing both internal or external confinement (or both) within a single system.

4.7 Static loads — Settlement control and limitation

The degree and extent to which loads are transferred from the surface of a stabilized layer to the underlying foundation soil is directly related to the amount of overall settlement that will occur over the life of the structure. For building loads and paved or unpaved roads constructed on embankments, refer to the appropriate national standard that highlights the design approach for estimation of settlement and the limitations of the approach. For each of these cases, the designer normally considers the loading area and amount of load transferred to the subgrade. However, for paved or unpaved roads, rutting potential or reduction in surface deformation is generally of greater concern.

4.8 Reduction in deformation from trafficking

As stated, confinement has been identified as the geosynthetics stabilization mechanism. In simplest terms, the geosynthetic restricts the lateral movement of aggregate fill placed upon or inside it. Many full-scale trials have shown that geosynthetic stabilized aggregate layers are significantly more resistant to surface deformation than non-stabilized layers when subjected to repeated trafficking loads. Furthermore, it has also been shown that deformation of the subgrade beneath the stabilized layer is also significantly reduced. This deformation reduction relies heavily on effective lateral restraint of the aggregate particles and the resulting confinement which creates a stiffer or higher modulus composite layer. Since elastic stiffness or resilient modulus of unbound aggregate is proportional to its confining pressure, the net effect of increasing the fill's modulus or stiffness is a spreading of the vertical stress distribution and a corresponding reduction in the deformation on top of the subgrade.[2] So, under repeated traffic loading, the geosynthetic not only restricts the movement of aggregate particles and thereby reduces deformation of the aggregate layer, the stiffer composite stabilized layer also restricts deformation of the subgrade.

4.9 Reduction in unbound aggregate degradation

The results of modelling and those of full-scale laboratory testing and traffic studies have demonstrated a positive improvement in the amount of trafficking that can occur over stabilized layers in comparison to control sections of non-stabilized granular structures. Comparing a non-stabilized and stabilized aggregate layer in full-scale study has shown both life extension and improved aggregate performance for the stabilized layer.[3] More aggregate degradation normally occurs in the control sections than the stabilized test sections.[4]

It is accepted that degradation of granular (i.e. aggregate) material increases the content of fines, reducing the water permeability and increasing the sensitivity of the granular (aggregate) material to reduced bearing capacity by increased water content and pore water pressure. For this reason, in addition to lateral confinement, the positive influence of separation, filtration and drainage geosynthetics can become significant.

© ISO 2025 – All rights reserved

Documents
Document Sharing Hub
Full document details: PD ISO/TR 18228-5:2025