PD ISO/TR 20571:2018

BSI Standards Publication

Dynaload — Design and construction — Use and maintenance

Documents
Document Sharing Hub

Full document details: PD ISO/TR 20571:2018

National foreword

This Published Document is the UK implementation of ISO/TR 20571:2018.

The UK participation in its preparation was entrusted to Technical Committee MCE/8/-/2, Hand-held, non-electric power tools - Safety.

A list of organizations represented on this committee can be obtained on request to its secretary.

This publication does not purport to include all the necessary provisions of a contract. Users are responsible for its correct application.

© The British Standards Institution 2018
Published by BSI Standards Limited 2018

ISBN 978 0 580 90092 1

ICS 25.140.01

Compliance with a British Standard cannot confer immunity from legal obligations.

This Published Document was published under the authority of the Standards Policy and Strategy Committee on 30 November 2018.

Amendments/corrigenda issued since publication

Date	Text affected

Documents
Document Sharing Hub

Full document details: PD ISO/TR 20571:2018

TECHNICAL REPORT

ISO/TR 20571

First edition
2018-10

Dynaload — Design and construction — Use and maintenance

Dynaload — Conception et construction — Utilisation et maintenance

Reference number
ISO/TR 20571:2018(E)

Documents
Document Sharing Hub

© ISO 2018

Full document details: PD ISO/TR 20571:2018

COPYRIGHT PROTECTED DOCUMENT

© ISO 2018

All rights reserved. Unless otherwise specified, or required in the context of its implementation, no part of this publication may be reproduced or utilized otherwise in any form or by any means, electronic or mechanical, including photocopying, or posting on the internet or an intranet, without prior written permission. Permission can be requested from either ISO at the address below or ISO's member body in the country of the requester.

ISO copyright office
CP 401 • Ch. de Blandonnet 8
CH-1214 Vernier, Geneva
Phone: +41 22 749 01 11
Fax: +41 22 749 09 47
Email: copyright@iso.org
Website: www.iso.org

Published in Switzerland

© ISO 2018 – All rights reserved

Documents
Document Sharing Hub

Full document details: PD ISO/TR 20571:2018

Contents

Page

Foreword ..... **iv**
Introduction ..... **v**
1 Scope **1**
2 Normative references **1**
3 Terms and definitions **1**
4 General **1**
5 Relationship with standards **3**
6 Design **4**
6.1 Preferred sizes 4
6.2 Test tool 4
6.2.1 Type 1: 1 piece — Solid formed tool piece and tool foot 4
6.2.2 Type 2: Two pieces — Tapered end tool piece with a mating tool foot 5
7 Cooling **6**
7.1 Low pressure air cooling 6
7.2 Alternative cooling 7
8 Operational features **7**
9 Maintenance **8**
10 Construction **8**
Annex A (informative) **Type 1 Single piece square-end Dynaload** **10**
Annex B (informative) **Type 2 Single piece taper-fit Dynaload** **12**
Annex C (informative) **Design and constructional details** **14**
Annex D (informative) **Recoil spring** **29**
Bibliography **31**

© ISO 2018 – All rights reserved

Documents
Document Sharing Hub
Full document details: PD ISO/TR 20571:2018

Foreword

ISO (the International Organization for Standardization) is a worldwide federation of national standards bodies (ISO member bodies). The work of preparing International Standards is normally carried out through ISO technical committees. Each member body interested in a subject for which a technical committee has been established has the right to be represented on that committee. International organizations, governmental and non-governmental, in liaison with ISO, also take part in the work. ISO collaborates closely with the International Electrotechnical Commission (IEC) on all matters of electrotechnical standardization.

The procedures used to develop this document and those intended for its further maintenance are described in the ISO/IEC Directives, Part 1. In particular the different approval criteria needed for the different types of ISO documents should be noted. This document was drafted in accordance with the editorial rules of the ISO/IEC Directives, Part 2 (see www.iso.org/directives).

Attention is drawn to the possibility that some of the elements of this document may be the subject of patent rights. ISO shall not be held responsible for identifying any or all such patent rights. Details of any patent rights identified during the development of the document will be in the Introduction and/or on the ISO list of patent declarations received (see www.iso.org/patents).

Any trade name used in this document is information given for the convenience of users and does not constitute an endorsement.

For an explanation on the voluntary nature of standards, the meaning of ISO specific terms and expressions related to conformity assessment, as well as information about ISO's adherence to the World Trade Organization (WTO) principles in the Technical Barriers to Trade (TBT) see the following URL: www.iso.org/iso/foreword.html.

This document was prepared by Technical Committee ISO/TC 118 *Compressors and pneumatic tools, machines and equipment*, Subcommittee SC 3, *Pneumatic tools and machines*.

Any feedback or questions on this document should be directed to the user's national standards body. A complete listing of these bodies can be found at www.iso.org/members.html.

© ISO 2018 – All rights reserved
Documents
Document Sharing Hub
Full document details: PD ISO/TR 20571:2018

Introduction

The measurement of physical parameters such as noise and vibration from hand-held tools has been the subject of investigation for many years. The means by which these parameters can be obtained have resulted in a number of devices to provide for a "working load" for the tool being investigated.

The resulting data can provide the customer with relevant information using a well-defined method that is both repeatable and reproducible. The last two issues, repeatability and reproducibility, are vital where the data obtained is required to demonstrate compliance with legislative requirements.

The equipment used to provide a "load" against which the hand-held power tool can "work" should be easily constructed from common materials and provide for ease of maintenance. This publication is intended to provide the specifications and guidance for such a loading device.

The information provided is primarily intended to instruct and supplement guidance given in standards for the measurement of noise, vibration of percussive hand-held power tools.

At the time of publication of this guidance document, dynamic loading devices, such as the ones described herein, had been used for many years in conjunction with the testing of percussive power tools. In particular, the vibration test code, ISO 28927-10, specified the use of such loading devices for testing a range of power tools, including chipping hammers, rock drills and concrete breakers. However, since the published standard not specified the design of the loading device in detail, there were inevitably many small differences between the loading devices which were manufactured. The question then arose as to whether these differences affected the measured results of the tests, for which the loading devices were used.

© ISO 2018 – All rights reserved

Documents
Document Sharing Hub
Full document details: PD ISO/TR 20571:2018

Documents
Document Sharing Hub

Full document details: PD ISO/TR 20571:2018

Dynaload — Design and construction — Use and maintenance

1 Scope

This document specifies the design, construction, guidance on use and maintenance of a dynamic loading device for the following categories of hand-held power tools:

— percussive;

— rotary-percussive.

The device can be used when measurements are being made for vibration and noise including when required for specification in test standards.

2 Normative references

There are no normative references in this document.

3 Terms and definitions

No terms and definitions are listed in this document.

ISO and IEC maintain terminological databases for use in standardization at the following addresses:

— ISO Online browsing platform: available at https://www.iso.org/obp

— IEC Electropedia: available at http://www.electropedia.org/

4 General

The dynamic loading device is given the common name of DYNALOAD. The device consists of a metallic cylinder filled with steel balls on which the hand-held power tool is brought to bear and which absorbs the energy transmitted by the tool. The device can either be fixed to a surface or buried below the working floor level.

Figure 1 identifies the essential items making up a Dynaload. The specification of each item is identified later in this publication.

The Dynaload device absorbs the blow energy from the power tool. Much of the shock wave is absorbed by the steel balls, however some 15 % to 20 % is reflected to the power tool, as would be the case in a normal working situation.

© ISO 2018 – All rights reserved

Documents
Document Sharing Hub
Full document details: PD ISO/TR 20571:2018

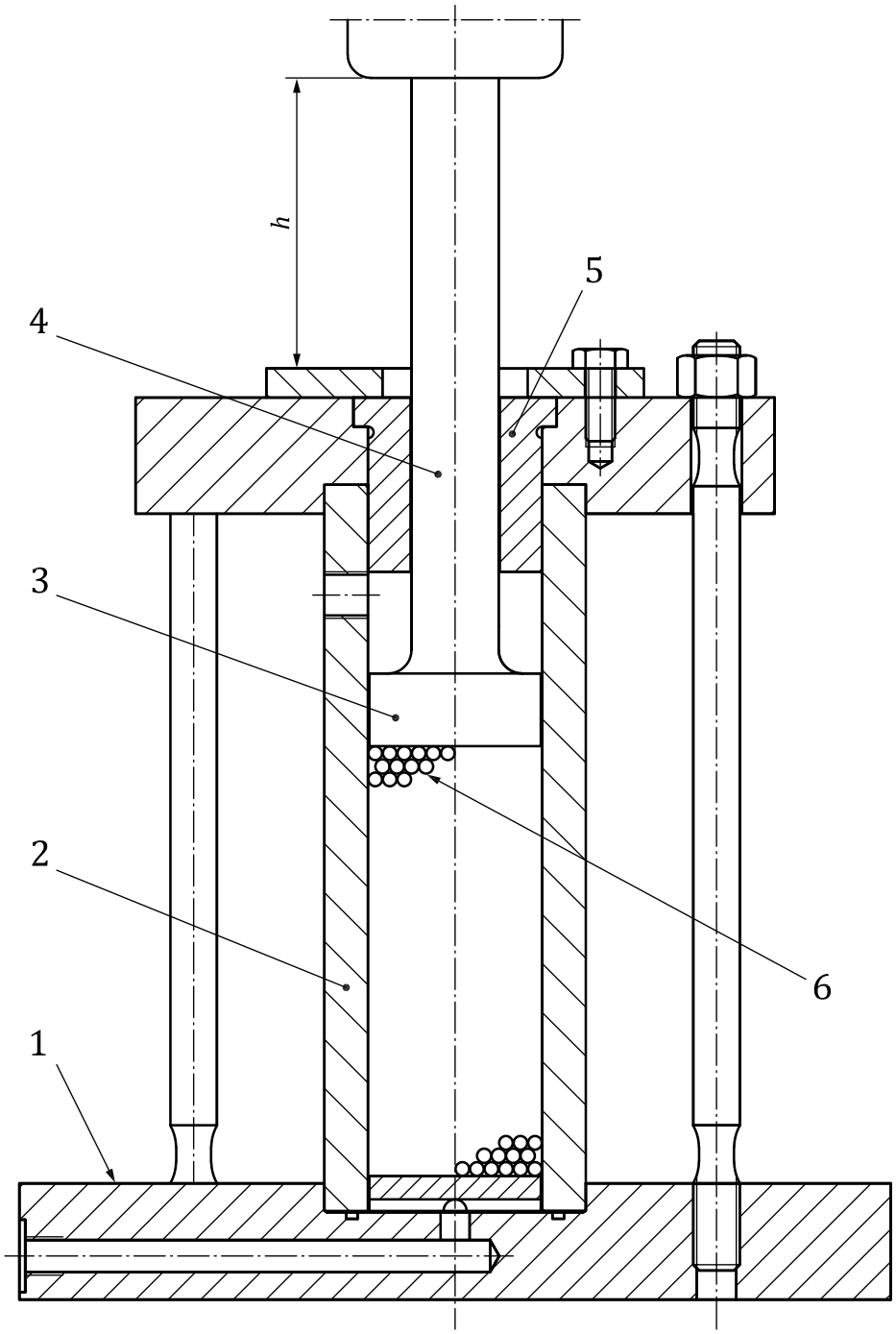

Key

1	steel plate	5	guide bush
2	cylinder	6	steel balls
3	tool foot	*h*	free length
4	tool piece		

Figure 1 — Basic elements

Figure 2 shows a typical construction of an assembly, which holds a Dynaload below ground. This would be utilised with concrete breakers, as it would afford a convenient location for the operator during testing conditions.

© ISO 2018 – All rights reserved
Documents
Document Sharing Hub
Full document details: PD ISO/TR 20571:2018

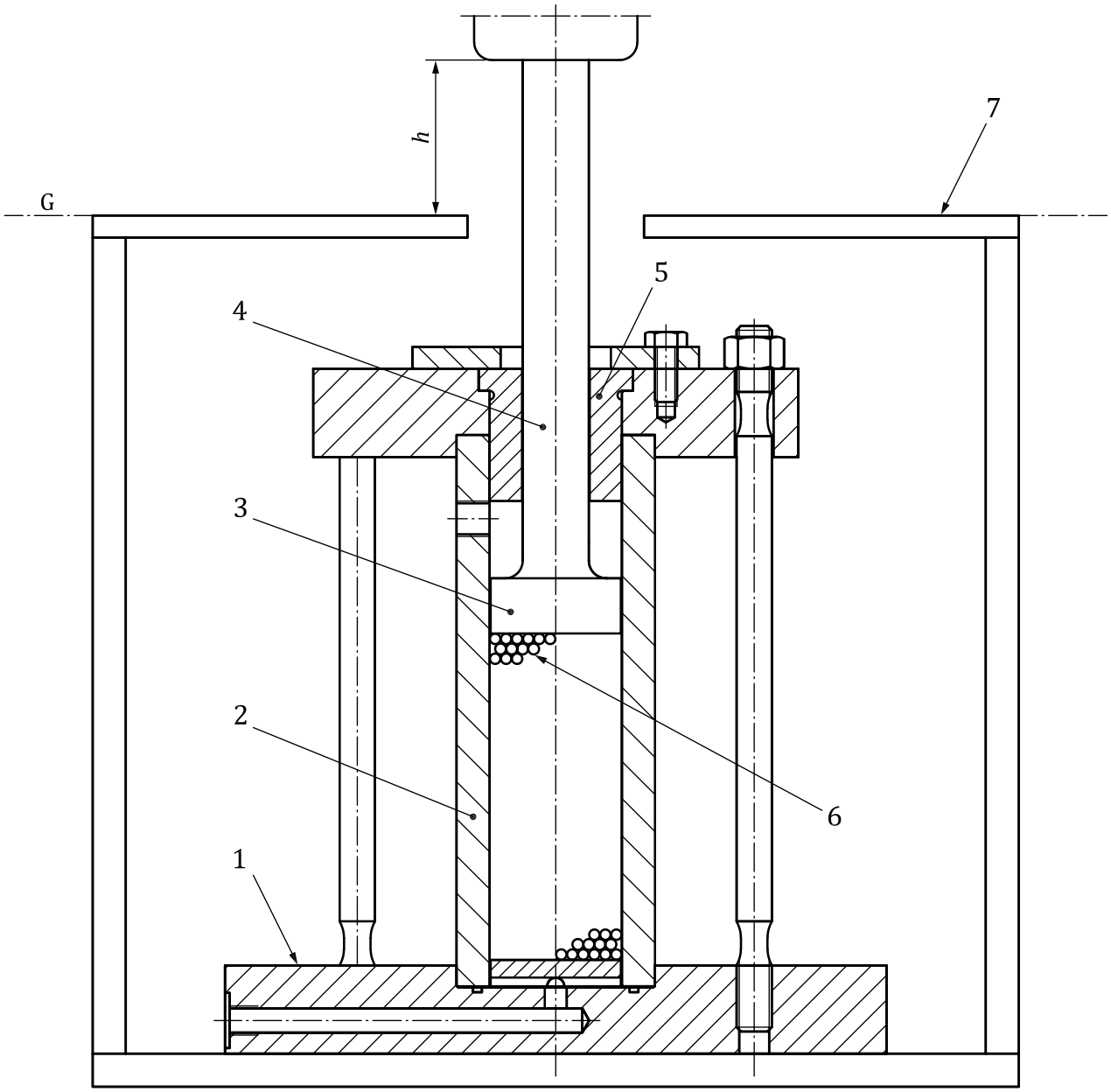

Key

1 steel plate
2 cylinder
3 tool foot
4 tool piece
5 guide bush
6 steel balls
7 screening slab
h free length
G ground level

Figure 2 — Below ground mounting

5 Relationship with standards

This document only specifies the Dynaload device and it is the responsibility of experts on international and other standards committees and users of this specification to:

— select the appropriate size and type of Dynaload test rig for the particular tool being tested, such as noise, vibration or performance testing;

© ISO 2018 – All rights reserved

Documents
Document Sharing Hub
Full document details: PD ISO/TR 20571:2018

— specify any additional requirements needed for the purpose of the test, such as mounting blocks, screening slabs, etc.;

— specify the loading and operating conditions for the tool under test.

When selecting or referring to a particular type of Dynaload test rig, the following format should be used:

Size/Type, e.g. "60 mm/Type 1 Dynaload"

where "Size" refers to the internal diameter of the cylinder (see 6.1) and "Type" refers to the design of test tool (see 6.2).

6 Design

6.1 Preferred sizes

The Dynaload should be constructed to be of an appropriate size depending on the hand-held power tools to be tested. Two preferred sizes are in use, i.e. cylinder diameters of 40 mm and 60 mm, these sizes relate to the requirement for absorbed power capabilities.

6.2 Test tool

6.2.1 Type 1: 1 piece — Solid formed tool piece and tool foot

Figure 3 identifies the form of a one-part tool. A unitary construction reduces the possible sources of unwanted noise and non-smooth operation. See Annex A for a solid formed tool piece and tool foot.

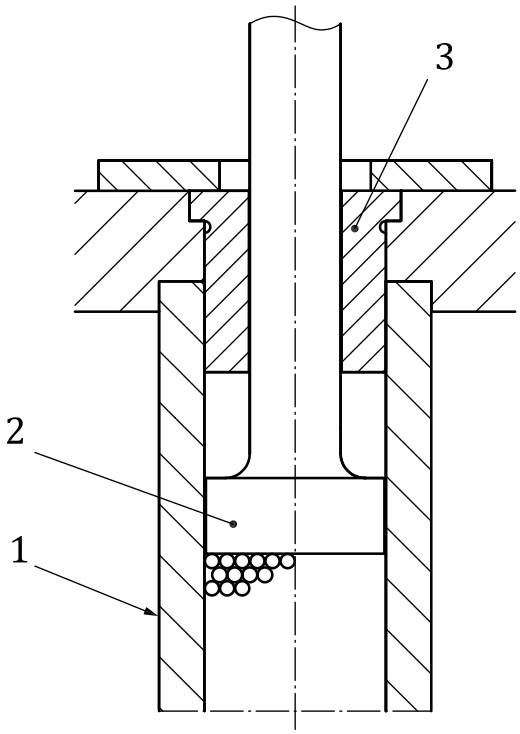

Key

1 cylinder

2 tool and tool foot as unitary assembly

3 split guide bush

Figure 3 — One-part tool (without spring)

© ISO 2018 – All rights reserved
Documents
Document Sharing Hub
Full document details: PD ISO/TR 20571:2018