PD ISO/TR 230-11:2018

BSI Standards Publication

Test code for machine tools

Part 11: Measuring instruments suitable for machine tool geometry tests

Documents
Document Sharing Hub

Full document details: PD ISO/TR 230-11:2018

National foreword

This Published Document is the UK implementation of ISO/TR 230-11:2018.

The UK participation in its preparation was entrusted to Technical Committee MTE/1/2, Machine tools - Accuracy.

A list of organizations represented on this committee can be obtained on request to its secretary.

This publication does not purport to include all the necessary provisions of a contract. Users are responsible for its correct application.

© The British Standards Institution 2018
Published by BSI Standards Limited 2018

ISBN 978 0 580 95193 0

ICS 25.080.01

Compliance with a British Standard cannot confer immunity from legal obligations.

This Published Document was published under the authority of the Standards Policy and Strategy Committee on 31 May 2018.

Amendments/corrigenda issued since publication

Date	Text affected

Documents
Document Sharing Hub

Full document details: PD ISO/TR 230-11:2018

TECHNICAL REPORT

ISO/TR 230-11

First edition
2018-04

Test code for machine tools —

Part 11: Measuring instruments suitable for machine tool geometry tests

Code d'essai des machines-outils —

Partie 11: Instruments de mesure compatibles avec les essais de géométrie des machines-outils

Reference number
ISO/TR 230-11:2018(E)

Documents
Document Sharing Hub
© ISO 2018

Full document details: PD ISO/TR 230-11:2018

COPYRIGHT PROTECTED DOCUMENT

© ISO 2018

All rights reserved. Unless otherwise specified, or required in the context of its implementation, no part of this publication may be reproduced or utilized otherwise in any form or by any means, electronic or mechanical, including photocopying, or posting on the internet or an intranet, without prior written permission. Permission can be requested from either ISO at the address below or ISO's member body in the country of the requester.

ISO copyright office
CP 401 • Ch. de Blandonnet 8
CH-1214 Vernier, Geneva
Phone: +41 22 749 01 11
Fax: +41 22 749 09 47
Email: copyright@iso.org
Website: www.iso.org

Published in Switzerland

© ISO 2018 – All rights reserved

Documents
Document Sharing Hub

Full document details: PD ISO/TR 230-11:2018

Contents

Page

Foreword ... **v**

Introduction ... **vi**

1 Scope ... **1**

2 Normative references ... **1**

3 Terms and definitions ... **1**

4 Preliminary remarks ... **5**
- 4.1 Measuring units ... 5
- 4.2 Uncertainty of measuring instrument ... 5
  - 4.2.1 General ... 5
  - 4.2.2 Environment factors ... 7
  - 4.2.3 Measuring equipment factors ... 9
  - 4.2.4 Setup and procedure factors ... 11
  - 4.2.5 Software and calculation factors ... 17
- 4.3 Measuring equipment calibration (ISO 10012) ... 17
  - 4.3.1 General ... 17
  - 4.3.2 Manufacturer and supplier of measuring instruments ... 18
  - 4.3.3 User of measuring instruments ... 18
  - 4.3.4 Measurement uncertainty ... 18
- 4.4 Comparison of measurement results by instruments using different measurement principles ... 18

5 Description of measuring instruments ... **19**

6 Mechanical artefacts for general use ... **20**
- 6.1 General ... 20
- 6.2 Reference straightedge ... 23
- 6.3 Test mandrels with taper shanks ... 27
- 6.4 Mandrels between centres ... 32
- 6.5 Reference squares ... 34
- 6.6 Reference cube ... 36
- 6.7 Surface plates ... 37
- 6.8 Reference sphere ... 38
- 6.9 1D ball array ... 39
- 6.10 2D ball array ... 42
- 6.11 Step gauge ... 43
- 6.12 Gauge block ... 44

7 Length and displacement measuring instruments ... **45**
- 7.1 General ... 45
- 7.2 Instruments for large and medium range linear displacements ... 46
  - 7.2.1 Laser interferometer ... 46
  - 7.2.2 Reference linear scale ... 49
  - 7.2.3 Standard scale ... 50
- 7.3 Instruments for short range linear displacements ... 51
  - 7.3.1 Contact-type sensors ... 51
  - 7.3.2 Non-contact sensors ... 55
  - 7.3.3 Contact probing system ... 60

8 Straightness measuring devices ... **63**
- 8.1 General ... 63
- 8.2 Taut wire with optical reading device ... 64
- 8.3 Laser interferometer with straightness optics ... 66
- 8.4 Alignment telescope ... 67
- 8.5 Two planes laser scanning device ... 70
- 8.6 Alignment laser ... 71

Documents
Document Sharing Hub

© ISO 2018 – All rights reserved

Full document details: PD ISO/TR 230-11:2018

9 Squareness measuring devices ... **72**
9.1 General ... 72
9.2 Laser interferometer with squareness and straightness optics ... 73
9.3 Index table with straightedge ... 74
9.4 Three planes laser scanning device ... 76

10 Flatness measuring devices ... **77**
10.1 General ... 77
10.2 Sweep optical square ... 78
10.3 Laser interferometer with angular optics ... 80
10.4 Single plane laser scanning device ... 81

11 Angle measuring instruments ... **82**
11.1 General ... 82
11.2 Level ... 83
11.2.1 Precision level ... 83
11.2.2 Electronic level ... 84
11.2.3 Inclinometer ... 85
11.3 Autocollimators ... 86
11.3.1 Autocollimator ... 86
11.3.2 Photo-electric autocollimators ... 87
11.3.3 Laser autocollimators ... 88
11.4 Laser interferometer with angular optics ... 89
11.5 Reference indexing table with optical angle reading device ... 90
11.6 Optical polygon with optical reading device ... 91
11.7 Laser assisted index device ... 92
11.8 Reference angle encoders ... 93

12 Special purpose instruments ... **94**
12.1 General ... 94
12.2 Single dimensional position reading device ... 94
12.2.1 Telescoping ball bar ... 94
12.2.2 Long range telescoping ball bar ... 96
12.2.3 Fibre interferometer ... 97
12.3 Multi-dimensional position reading device ... 98
12.3.1 Two-dimensional digital scale ... 98
12.3.2 Laser tracing system ... 99
12.3.3 3D-probe for spheres (contact type) ... 100
12.3.4 3D-probe head, non-contact type ... 101
12.4 Other position reading device ... 103
12.4.1 Spindle error test equipment ... 103
12.4.2 Swivelling angle measuring device ... 104

13 Special application examples of the instruments ... **105**
13.1 Spindle rotation accuracy measurement ... 105
13.2 Thermal displacement measurements ... 105
13.3 Tool position set ... 105
13.4 Workpiece positioning ... 105

Annex A (informative) **Checking devices for instruments in the workshop** ... **106**

Annex B (informative) **Existing ISO and national standards for measuring equipment (2015)** ... **112**

Annex C (informative) **Special caution for supporting system of measuring devices** ... **113**

Annex D (informative) **Reference table of uncertainty contributor** ... **115**

Bibliography ... **126**

© ISO 2018 – All rights reserved

Documents
Document Sharing Hub
Full document details: PD ISO/TR 230-11:2018

Foreword

ISO (the International Organization for Standardization) is a worldwide federation of national standards bodies (ISO member bodies). The work of preparing International Standards is normally carried out through ISO technical committees. Each member body interested in a subject for which a technical committee has been established has the right to be represented on that committee. International organizations, governmental and non-governmental, in liaison with ISO, also take part in the work. ISO collaborates closely with the International Electrotechnical Commission (IEC) on all matters of electrotechnical standardization.

The procedures used to develop this document and those intended for its further maintenance are described in the ISO/IEC Directives, Part 1. In particular the different approval criteria needed for the different types of ISO documents should be noted. This document was drafted in accordance with the editorial rules of the ISO/IEC Directives, Part 2 (see www.iso.org/directives).

Attention is drawn to the possibility that some of the elements of this document may be the subject of patent rights. ISO shall not be held responsible for identifying any or all such patent rights. Details of any patent rights identified during the development of the document will be in the Introduction and/or on the ISO list of patent declarations received (see www.iso.org/patents).

Any trade name used in this document is information given for the convenience of users and does not constitute an endorsement.

For an explanation on the voluntary nature of standards, the meaning of ISO specific terms and expressions related to conformity assessment, as well as information about ISO's adherence to the World Trade Organization (WTO) principles in the Technical Barriers to Trade (TBT) see the following URL: www.iso.org/iso/foreword.html.

This document was prepared by Technical Committee ISO/TC 39, *Machine tools,* Subcommittee SC 2, *Test conditions for metal cutting machine tools*.

A list of all parts in the ISO 230 series can be found on the ISO website.

© ISO 2018 – All rights reserved

Documents
Document Sharing Hub
Full document details: PD ISO/TR 230-11:2018

Introduction

The purpose of this document is to provide information for instruments and equipment for testing machine tools as specified in the ISO 230 series (except ISO 230-5 and ISO/TR 230-8), and in machine-specific standards of ISO/TC 39/SC 2, test conditions for metal cutting machine tools.

The main parts of this document have been transferred from ISO 230-1:1996, Annex A, which is no longer part of ISO 230-1. Newly developed measuring instruments, like special purpose measuring instruments in Clause 12, have been added to this document as well as special application examples in Clause 13.

The concept of measuring uncertainty has been implemented. Uncertainty contributors for measuring instruments and measuring procedures are listed in Annex D to improve reliability of test results. In addition, Annex A addresses checking devices for instruments applied in the workshop and Annex C addresses influences of supporting systems.

Additional information for existing ISO and national standards for measuring equipment is included in Annex B.

This document and ISO 230-1:2012 together cover the entire content of ISO 230-1:1996, with updated instruments and concepts.

© ISO 2018 – All rights reserved
Documents
Document Sharing Hub
Full document details: PD ISO/TR 230-11:2018

Test code for machine tools —

Part 11: Measuring instruments suitable for machine tool geometry tests

1 Scope

The aim of this document is to document the characteristics of precision measuring instruments for testing the geometric accuracy of machine tools, operating either under no-load or under quasi-static conditions.

Where necessary, reference is made to the appropriate International Standards.

The measuring instruments for operational testing of machine tools [vibrations (ISO/TR 230-8), noise (ISO 230-5), stick-slip motion of components, etc.] as well as instruments for checking of other characteristics of machine tools (speeds, feeds, temperature) are not covered in this document. The measuring instruments for checking of workpiece geometry (size, form, etc.) are not covered by this document either.

This document has list style construction for ease of search and identification of each instrument's characteristics.

Sources of uncertainty of instruments and measurements are described in this document for more accurate measurement procedures.

2 Normative references

There are no normative references in this document.

3 Terms and definitions

For the purposes of this document, the following terms and definitions apply.

ISO and IEC maintain terminological databases for use in standardization at the following addresses:

— ISO Online browsing platform: available at https://www.iso.org/obp

— IEC Electropedia: available at https://www.electropedia.org/

3.1
calibration
operation that, under specified conditions, in a first step, establishes a relation between the quantity values with measurement uncertainties provided by measurement standards and corresponding indications with associated measurement uncertainties, and in a second step, uses this information to establish a relation for obtaining a measurement result from an indication

Note 1 to entry: A calibration may be expressed by a statement, calibration function, calibration diagram, calibration curve, or calibration table. In some cases, it may consist of an additive or multiplicative correction of the indication with associated measurement uncertainty.

Note 2 to entry: Calibration should not be confused with adjustment of a measuring system, often mistakenly called "self-calibration", nor with verification of calibration.

© ISO 2018 – All rights reserved

Documents
Document Sharing Hub
Full document details: PD ISO/TR 230-11:2018

Note 3 to entry: Often, the first step alone in the above definition is perceived as being calibration.

[SOURCE: JCGM 200:2012, 2.39]

3.2
measuring range
set of values of measurands for which the error of a measuring instrument is intended to lie within specified limits

Note 1 to entry: Error is determined in relation to a conventional true value.

[SOURCE: ISO 14978:2006, 3.36]

3.3
accuracy
closeness of agreement between a measured quantity value and a true quantity value of a measurand

Note 1 to entry: The concept "measurement accuracy" is not a quantity and is not given a numerical quantity value. A measurement is said to be more accurate when it offers a smaller measurement error.

Note 2 to entry: The term "measurement accuracy" should not be used for measurement trueness and the term "measurement precision" should not be used for 'measurement accuracy', which, however, is related to both these concepts.

Note 3 to entry: "Measurement accuracy" is sometimes understood as closeness of agreement between measured quantity values that are being attributed to the measurand.

[SOURCE: JCGM 200:2012, 2.13]

3.4
linearity
degree of insignificance on deviation from the linear relation between the input signal and the output signal[20]

3.5
repeatability
measuring precision under a set of repeatability conditions of measurement

Note 1 to entry: These conditions include

— reduction to a minimum of the variations due to the observer,

— the same measurement procedure,

— the same observer,

— the same measuring equipment, used under the same conditions,

— the same location, and

— repetition over a short period of time.

Note 2 to entry: Repeatability can be expressed quantitatively in terms of the dispersion characteristics of the indications.

3.6
frequency response
a state where the amplitude ratio of an output signal to the input signal and the phase difference between the two are varied as a function of sinusoidal input signal frequency[20]

3.7
measuring force
<load> force applied by the stylus of an indicator or recorder to the feature being measured

© ISO 2018 – All rights reserved
Documents
Document Sharing Hub
Full document details: PD ISO/TR 230-11:2018

3.8
operating environment
atmosphere or environment in which the object is placed during testing[20]

3.9
stability
property of a measuring instrument, whereby its metrological properties remain constant in time

Note 1 to entry: Stability may be quantified in several ways.

EXAMPLE 1 In terms of the duration of a time interval over which a metrological property changes less than a stated amount.

EXAMPLE 2 In terms of the change of a property over a stated time interval.

[SOURCE: JCGM 200:2012, 4.19]

3.10
correction
compensation for an estimated systematic effect

Note 1 to entry: See ISO/IEC Guide 98-3:2008, 3.2.3, for an explanation of "systematic effect".

Note 2 to entry: The compensation value(s) can take different forms, such as a constant addition or multiplication, or multiple values obtained from a table.

[SOURCE: JCGM 200:2012, 2.53]

3.11
measuring instrument
device used for making measurements, alone or in conjunction with one or more supplementary devices

Note 1 to entry: A measuring instrument that can be used alone is a measuring system.

[SOURCE: JCGM 200:2012, 3.1]

3.12
measuring transducer
device, used in measurement, that provides an output quantity having a specified relation to the input quantity

[SOURCE: JCGM 200:2012, 3.7]

3.13
measuring system
set of one or more measuring instruments and often other devices, including any reagent and supply, assembled and adopted to give information used to generate measured quantity values within specified intervals for quantities of specified kinds

[SOURCE: JCGM 200:2012, 3.2]

3.14
sensor
element of a measuring system that is directly affected by the phenomenon, body or substance carrying the quantity to be measured

EXAMPLE Sensing coil of a platinum resistance thermometer, rotor of a turbine flow meter, Bourdon tube of a pressure gauge, float of a level-measuring instrument, photocell of a spectrometer, thermotropic liquid crystal which changes colour as a function of temperature.

Note 1 to entry: In some fields, the term "detector" is used for this concept.

[SOURCE: JCGM 200:2012, 3.8]

© ISO 2018 – All rights reserved

Documents
Document Sharing Hub
Full document details: PD ISO/TR 230-11:2018

3.15
detector
device or substance that indicates the presence of a phenomenon, body, or substance when a threshold value of an associated quantity is exceeded

EXAMPLE Halogen leak detector, litmus paper.

Note 1 to entry: In some fields, the term "detector" is used for the concept of sensor.

[SOURCE: JCGM 200:2012, 3.9]

3.16
sensitivity
quotient of the change in the indication of a measuring system and the corresponding change in a value of a quantity being measured

Note 1 to entry: Sensitivity of a measuring system can depend on the value of the quantity being measured.

Note 2 to entry: The change considered in a value of a quantity being measured needs to be large compared with the resolution.

[SOURCE: JCGM 200:2012, 4.12]

3.17
resolution
smallest change, in a quantity being measured that causes a perceptible change in the corresponding indication

Note 1 to entry: Resolution can depend on, for example, noise (internal or external) or friction. It can also depend on the value of a quantity being measured.

[SOURCE: JCGM 200:2012, 4.14]

3.18
instrumental drift
continuous or incremental change over time in indication, due to changes in metrological properties of a measuring instrument

Note 1 to entry: Instrumental drift is related neither to a change in a quantity being measured nor to a change of any recognized influence quantity.

[SOURCE: JCGM 200:2012, 4.21]

3.19
optical measuring instrument
instruments, measuring physical, geometrical or material properties based on optical principles, such as photometry, interferometry, geometrical optics, holography, or refractometry[14].

EXAMPLE one-coordinate and multi-coordinate measuring machines, surface-measuring instruments, numerical measuring instruments for machine control, autocollimators, telescopes, contour-measuring instruments.

3.20
maximum permissible error
MPE
<for a metrological characteristic> extreme value of an error of a metrological characteristic permitted by specifications, regulations, etc. for a given piece of measuring equipment

[SOURCE: ISO 14978:2006, 3.21, modified — The domain has been added and "errors" has been changed to "error".]

© ISO 2018 – All rights reserved
Documents
Document Sharing Hub
Full document details: PD ISO/TR 230-11:2018

3.21
measuring precision
closeness of agreement between indications or measured quantity values obtained by replicate measurements on the same or similar objects under specified conditions

Note 1 to entry: Measurement precision is usually expressed numerically by measures of imprecision, such as standard deviation, variance, or coefficient of variation under the specified conditions of measurement.

Note 2 to entry: The specified condition can be, for example, repeatability conditions of measurement, intermediate precision condition of measurement, or reproducibility condition of measurement (see ISO 5725-1. 1994).

Note 3 to entry: Measurement precision is used to define measurement repeatability, intermediate measurement precision, and measured reproducibility.

Note 4 to entry: Sometimes "measurement precision" is erroneously used to mean measurement accuracy.

[SOURCE: JCGM 200:2012, 2.15]

4 Preliminary remarks

4.1 Measuring units

The units for the following features are:

— displacement, distance and linear deviations: mm or µm;

— angles: degrees or a ratio;

— angular deviation: µm/m or ″ (arc seconds); and

— linear compliance: µm/N.

4.2 Uncertainty of measuring instrument

4.2.1 General

Uncertainty of measuring instrument is a component of combined measurement uncertainty (JCGM 200:2012, 4.24). The instrument uncertainty should be small enough to assess the system performance. The uncertainty of the measurement including the instrument uncertainty should be considered according to ISO 14253-1 ("decision rules") when it is used to check system performance against specifications. However, if the measurement uncertainty is less than 10 % of the specification limit, it is common industrial practice to decide on the conformance or non-conformance based on the indicated measurement value.

Measuring equipment should not be used until it has been allowed to stabilize at the ambient temperature, and stability maintained during the test procedure.

Care should be taken to prevent disturbance to the equipment caused by vibrations, magnetic fields, electrical interference, etc.

General uncertainty contributors are indicated in Table 1 (see also ISO 14253-2). Annex D describes relationship between the instruments and uncertainty contributors. Simple explanation of uncertainty contributors related to the measuring instruments and set-up procedures are described in the following clauses.

© ISO 2018 – All rights reserved

Documents
Document Sharing Hub
Full document details: PD ISO/TR 230-11:2018

Table 1 — List of uncertainty contributors

1. Environment	**2. Measuring equipment**
Absolute temperature (4.2.2.1)	Stability (4.2.3.1)
Temperature spatial gradient (4.2.2.2)	Scale mark quality (4.2.3.2)
Temperature time variance (4.2.2.2)	Temperature expansion coefficient (4.2.3.3)
Vibration/noise (4.2.2.3)	Thermal conductivity (4.2.3.4)
Humidity (4.2.2.4)	Uncertainty of the calibration (4.2.3.5)
Contamination (4.2.2.5)	Resolution of the main scale (analogue or digital) (4.2.3.6)
Ambient pressure (4.2.2.6)	Time since last calibration (4.2.3.7)
Air composition (4.2.2.7)	Magnification, electrical or mechanical (4.2.3.8)
Air flow (4.2.2.7)	Wavelength error (4.2.3.9)
Gravity (4.2.2.8)	Zero-point stability (4.2.3.10)
Electromagnetic interference (4.2.2.9)	Measuring force stability/absolute force (4.2.3.11)
Supply air pressure (e.g. air bearings) (4.2.2.10)	Hysteresis (4.2.3.12)
Heat radiation (4.2.2.11)	Probe system, Tip radius, Form deviation of tip (4.2.3.13)
Instrument thermal equilibrium (4.2.2.12)	Stiffness/rigidity (4.2.3.14)
	Linear coefficient for thermal expansion (4.2.3.15)
	Temperature stability/sensitivity (4.2.3.16)
	Parallaxes (4.2.3.17)
	Interpolation system, error wavelength (4.2.3.18)
	Interpolation resolution (4.2.3.19)
3. Measurement setup and procedure	**4. Software and calculations**
Cosine errors and sine errors (4.2.4.1)	Rounding/Quantification (4.2.5.1)
Abbe principle (4.2.4.2)	Algorithms (4.2.5.2)
Temperature sensitivity (4.2.4.3)	Sampling (4.2.5.3)
Stiffness/rigidity (4.2.4.4)	Filtering (4.2.5.4)
Stiffness of the probe system (4.2.4.5)	Correction of algorithm/Certification of algorithm (4.2.5.5)
Optical aperture (4.2.3.6)	Interpolation/extrapolation (4.2.5.6)
Interaction between standard and setup (4.2.4.7)	
Warming up (4.2.4.8)	
Conditioning (4.2.4.9)	
Number of measurements (4.2.4.10)	
Order of measurements (4.2.4.11)	
Duration of measurements (4.2.4.12)	
Alignment (4.2.4.13)	
Choice of reference — reference item (standard) (4.2.4.14)	
Choice of apparatus (4.2.4.15)	
Strategy (4.2.4.16)	
Fixturing (4.2.4.17)	
Number of points (4.2.4.18)	
Probing principle and strategy (4.2.4.19)	

© ISO 2018 – All rights reserved
Documents
Document Sharing Hub
Full document details: PD ISO/TR 230-11:2018

Table 1 *(continued)*

Alignment of probing system (4.2.4.20)	
Reversal measurements (4.2.4.21)	
Multiple redundancy, error separation (4.2.4.22)	

4.2.2 Environment factors

4.2.2.1 Reference temperature

Standard reference temperature for machine tool measurements is 20 °C (see ISO 1). Deviations from this temperature, either in absolute terms or due to temporal and spatial temperature gradients, results in linear expansion and/or bending of the measuring equipment, the measurement set-up and the object being measured. The influence of temperature deviations on the length is given by Formula (1).

$$\Delta L = \Delta T \times \alpha \times L \tag{1}$$

where

ΔT is the relevant temperature deviation from 20 °C;

α is the temperature expansion coefficient of the material;

L is the effective length under consideration (see ISO 14253-2:2011, 8.4.8.1).

See also 4.2.3.3 and ISO/TR 16015.

4.2.2.2 Temperature gradient/variance

The existence of temperature gradients implies that portions of the environment will not be at the same mean temperature such that the consequences of mean temperatures other than 20 °C will be different in different locations in a room. Additional complexity is created when these temperature gradients change in time (see also ISO 230-3:2007, Annex D).

4.2.2.3 Vibration/noise

Vibration/noise from internal of machine tool system under test or from external sources causes relative displacement between the measuring instrument and the target machine surface. Such vibration also affects the supporting device of the instrument. Acoustic noise sometimes excites vibration that affects the instrument (see also ISO/TR 230-8).

4.2.2.4 Humidity

Length measurement using laser interferometer is affected by the change of the laser wavelength due to the change in the relative humidity of air, in which the laser beam passes. For example, 30 % change in relative humidity of air causes 1 µm/m change in length measurement.

4.2.2.5 Contamination

Dust, rust, oil, chemical materials and other unwanted small particles in the workshop can disturb precise contact between the instrument and target work surface. Surface contamination on optical parts can affect optical performance such as polarization, wavelength change, etc.

© ISO 2018 – All rights reserved

Documents
Document Sharing Hub
Full document details: PD ISO/TR 230-11:2018

4.2.2.6 Ambient pressure

Length measurement using laser interferometer is affected by the change of the laser wavelength due to the change in pressure of air, in which the laser beam passes. For example, 330 Pa change in absolute air pressure causes 1 µm/m change in length measurement.

4.2.2.7 Air flow/air composition

The flow rate and velocity of the ambient air are of prime importance in the control of temperature variation and temperature gradients of the machine components. Also, such air characteristics affect the wavelength of the laser and, consequently, the length measurement when laser interferometer is used. The local air density change directly influences the length unit (see 4.2.2.4, 4.2.2.6 and also ISO 230-3:2007, Annex D).

4.2.2.8 Gravity

See 4.2.3.14.

4.2.2.9 Electromagnetic interference

Electromagnetic fields induced by surrounding power electronic facilities can contaminate the accuracy, stability and instrumental drift of an electronic measuring instrument. Sensors using magnetic effect such as scale, limit sensor, and inductive gauges can be influenced. It can affect sensor itself, connecting cable, amplifier and power source.

4.2.2.10 Supply air pressure (air bearing)

Air gauge, linear motion instruments with air bearing are operated by pressurized supply air in the workshop. The variance of air pressure can influence the air gauge stability, gap of air bearings, and motion accuracy. Content of moisture in the supply air can also induce rust.

4.2.2.11 Heat radiation

Heat generated by the machine environment can affect the measuring instrument and its supporting system. Such radiation can be guarded by a reflective material cover such as an aluminium sheet.

4.2.2.12 Instrument thermal equilibrium

Temperature of the instrument placed on the target surface of the machine should be as close as possible to the machine temperature. The difference between these induces local deformation of instrument, thermally-induced changes in readings, etc.

4.2.2.13 EVE (Environmental Variation Error)

Environmental variation (such as temperature variation, air density variation, ground vibration) influences the measurement device and/or the machine tool under test causing environmental variation error (EVE) (see also ISO/TR 230-9:2005, C.2.5). This environmental variation error (EVE) can be checked by setting up the measurement equipment on the machine tool under test and looking at the change of readout during the time necessary to do the test. The location of EVE test is selected in order to recognize the largest influence from EVE on the geometrical test concerned. Figure 1 shows an example of EVE on laser angle measurement. The data indicate the variance within 120 seconds. The total EVE value is about 1 arc-second (see 4.2.2.2, 4.2.2.3, 4.2.2.6 and 4.2.2.7).

© ISO 2018 – All rights reserved
Documents
Document Sharing Hub
Full document details: PD ISO/TR 230-11:2018

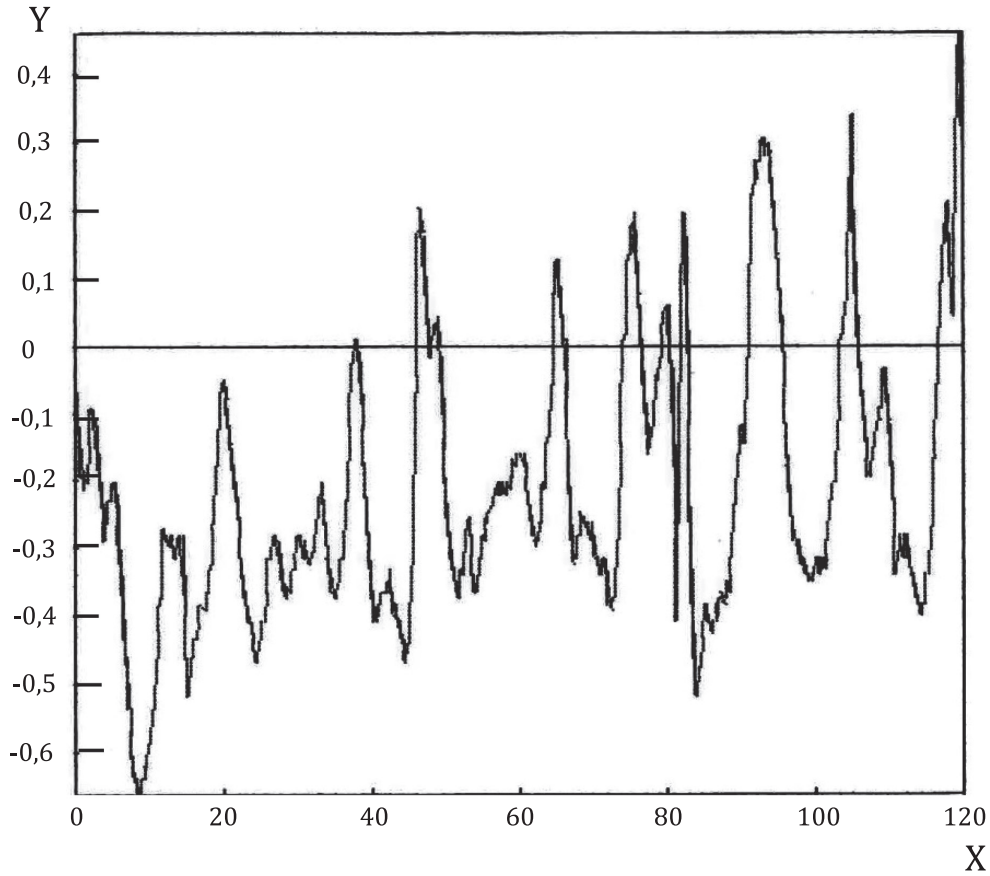

Key

X time: 0 s to 120 s

Y angle deviation in ″ (arc sec)

Figure 1 — Example of EVE by laser angle measurement

4.2.3 Measuring equipment factors

4.2.3.1 Stability

See 3.9.

4.2.3.2 Scale mark quality

The quality of a scale mark used for reading a value affects the accuracy. If the scale mark is not clear, the reading stability is contaminated and the total accuracy decreases (see also ISO 14978:2006, 3.28.11).

4.2.3.3 Coefficient of thermal expansion

This coefficient should be given as an "effective coefficient of thermal expansion" relevant to the effect of temperature on the geometrical characteristic represented by the material measured. The uncertainty of the stated value should also be provided (see ISO 14978:2006, 6.4.5).

4.2.3.4 Thermal conductivity

Differences of components' thermal conductivity can induce local deformation in the measuring instrument. Even if both temperature expansion coefficients are the same, the mass of components should be considered during temperature changes, as different mass can cause different temperature

© ISO 2018 – All rights reserved

Documents
Document Sharing Hub
Full document details: PD ISO/TR 230-11:2018

of components before reaching thermal equilibrium. It is possible thermal equilibrium not be reached if there is relevant environmental thermal variation and if the thermal time constants of elements engaged are significantly different.

4.2.3.5 Uncertainty of the calibration

Quality of calibration procedures should be high enough to minimize the uncertainty of measurement. Even if the resolution of an instrument is high, its reliability depends on the calibration integrity.

4.2.3.6 Resolution of the main scale (analogue or digital)

Resolution of the main scale should be fine enough to maintain the adequate sensitivity to change in measured value.

4.2.3.7 Time since last calibration

If the calibrated instrument is not stable, the calibration is valid only for a limited period of time. The latest calibration date should be clearly recorded and reported.

4.2.3.8 Magnification, electrical, mechanical, or optical

Small displacement values are magnified mechanically, electronically or optically to easily identify the values. Magnification accuracy of the measuring instrument influences the final reading.

4.2.3.9 Wavelength error

If a measuring instrument uses wavelength, i.e. optical, ultrasonic and electro-magnetic, as its length scale, wavelength error directly affects the measurement result. Calibration of wavelength should be conducted at certain intervals. It should be noted that the wavelength of the laser beam depends on the refractive index of the air through which it passes. Since the refractive index of air varies with temperature, pressure and relative humidity, the wavelength value used to compute, it can be necessary to compensate the measured length values for changes in these environmental parameters. For example, 1 °C change in ambient air temperature causes 1 µm/m error in length measurement.

4.2.3.10 Zero-point stability

Relative displacements are detected by movement of scale referring to zero-point or reference point. If zero-point moves from stationary position, this motion causes measurement uncertainty.

4.2.3.11 Measuring force stability / absolute force

Standard reference condition for machine tool measurements is zero measurement force. The effect on errors and uncertainty of length measurement by non-zero force is caused by elastic and, in some cases, also plastic deformation of the measurement equipment, the measurement set-up and the measuring object. Especially, the effect on the contact geometry between measuring equipment and measurement object should be investigated (see ISO 14253-2:2011, 8.4.8.2).

4.2.3.12 Hysteresis

It is the property of measuring equipment, or a characteristic whereby the indication of the equipment or value of the characteristic depends on the direction of the preceding stimuli. Hysteresis can also depend, for example, on the distance travelled after the direction of stimuli has changed (see ISO 14978:2006, 3.24).

4.2.3.13 Probe stylus system, tip radius, form deviation of the tip

In a contact-type measuring system, shape, form and size of the contact element affect real contact point calculation. These values are calibrated beforehand.

© ISO 2018 – All rights reserved
Documents
Document Sharing Hub
Full document details: PD ISO/TR 230-11:2018

4.2.3.14 Stiffness/rigidity

If components that directly transfer displacement to the measuring transducer system lack stiffness or rigidity against force generated by displacement, linearity between real displacement and sensed value differs. In artefacts such as a straightedge, gravity and measuring force induce natural sag and deformation. These values induce form error of the reference artefacts.

4.2.3.15 Linear coefficient for thermal expansion

Materials used in measuring systems have unique thermal expansion coefficients. If the temperature of the instrument is different from 20 °C, components of the instrument that have different thermal expansion coefficients expand differently, and these differences induce different measuring transducer magnification values.

4.2.3.16 Temperature stability/sensitivity

If a measuring system uses material/design other than non-expansion material/design, the measuring system is affected by temperature changes induced by external or internal heat generation.

4.2.3.17 Parallaxes

If a measuring system has a user interface requiring human reading/interpretation of the output such as a vernier calliper or a micrometer, then the distance between master scale and the pointer generates a reading error due to the distance between human eyes.

4.2.3.18 Interpolation system

Basic scale pitch resulting from the wavelength generated by optical, magnetic, or electrical means has a limitation of not having adequate resolution. Therefore, these basic pitches are divided into smaller units by interpolation. Interpolation can be achieved optically, electronically or by using software. Such interpolation systems have their own limitation of linearity.

4.2.3.19 Interpolation resolution

Interpolation systems determine resolution by dividing the basic pitch by a number of equal units. If resolution is very fine, interpolation speed is low. Accuracy of interpolation is affected by system design.

4.2.4 Setup and procedure factors

4.2.4.1 Cosine and sine errors

Misalignment of the scale of the measuring instrument (e.g. laser-beam path) with the axis of motion of the machine tool results in an error between the measured distance and the actual distance travelled. This misalignment error is usually referred to as cosine error, because the magnitude of the error is proportional to the term $(1 - \cos \theta)$, where θ is the angle of misalignment between the laser beam and the axis of motion.

When the measurement system is misaligned with the axis of machine travel, the cosine error causes the measured distance to be longer than the actual distance (see Figure 2).

The distance measured by the laser measurement system is Lc while the true distance travelled by the machine tool is L. By drawing an arc of radius D and centred at position A, one can easily see that L is shorter than Lc.

The only way to eliminate cosine error is to follow good alignment procedures during the set-up (see also ISO 230-2:2014, Annex A).

© ISO 2018 – All rights reserved

Documents
Document Sharing Hub
Full document details: PD ISO/TR 230-11:2018

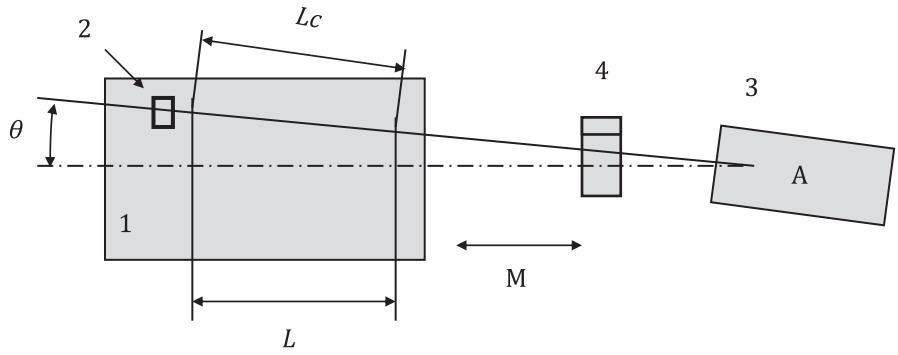

Key

1 machine table
2 retro reflector
3 laser head
4 interferometer
L actual machine travel
Lc measured machine travel
M direction of motion
θ angle of misalignment

Figure 2 — Cosine error by laser interferometer measurement

4.2.4.2 Abbe principle

Referring to Figure 3, if a measurement is taken at a location 2 which is offset, *O*, from the machine tool displacement measurement system, 6, (e.g. ball screw, linear scale) any angular error motion (pitch and yaw error motion: *θ*) of the element introduces an error (*L*m – *D*c) (see A.2.3 and ISO 230-2:2014, Annex A).

A rule of thumb helpful in approximating the error attributable to an angular error motion: for each arc sec of angular error motion the error introduced is approximately 5 µm/m of offset. For a 200 mm Abbe offset and a 2 ″ (arc sec) angular motion, the error in the displacement measurement is 200 mm × 5 (µm/m) / (arc sec) × 2 ″ (arc sec) = 2 µm.

See also ISO 230-1:2012, 8.3.2.

© ISO 2018 – All rights reserved
Documents
Document Sharing Hub
Full document details: PD ISO/TR 230-11:2018

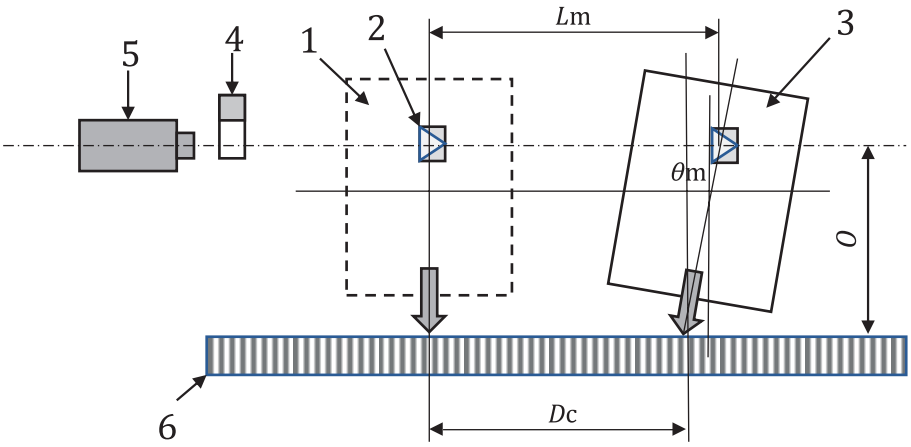

Key

1 machine table at position 1
2 retro reflector
3 machine table at position 2
4 interferometer
5 laser
6 machine scale
O offset between machine scale and measuring position (Abbe offset)
*L*m measured length
*D*c machine command distance
*θ*m error motion angle

Figure 3 — Abbe offset error by laser interferometer measurement

4.2.4.3 Temperature sensitivity

A measuring system can be sensitive to the surrounding temperature change/gradients depending on its mechanical design and/or material used. Such influence affects the stability of the sensor reading.

4.2.4.4 Stiffness/rigidity

Simply supported (by two points) mechanical artefacts such as straightedge and taut wire are influenced by gravity. If straightness measurement is performed in the vertical direction, this deflection caused by gravity directly affects the measured straightness deviation. To minimize this effect, supporting points should be considered. In case of vertical direction measurement, distance between the support points should be $5L / 9$ (where L is the working size of the artefact). Table 2 shows examples of supporting distance and estimated deflection.

Table 2 — Example of estimated deflection values

Working size, L (mm)	300	500	800	1 000	1 600
Supporting distance ($5L/9$) (mm)	190	300	465	575	910
Maximum Deflection (mm)	0,001	0,003	0,004	0,008	0,016
NOTE The natural deflection is proportional to the modulus of elasticity, E, of the material used. The deflection values given in the table correspond to straightedges made of ordinary cast iron: E = 98 kN/mm^2. In the case of steel, E = 196 kN/mm^2, the deflections are halved. In the case of heavy-duty cast iron, where, for example, E = 147 kN/mm^2, the deflection are 2/3 the values in the Table.					

Supporting device stiffness check is required when the sensor is attached to the machine tool, see ISO 230-1:2012, 6.3.2). See also Annex C.

© ISO 2018 – All rights reserved

Documents
Document Sharing Hub
Full document details: PD ISO/TR 230-11:2018

4.2.4.5 Stiffness of probing system

Bending stiffness affects the measuring position accuracy when applying probing extension bars. Such extension length should be as short as possible.

4.2.4.6 Optical aperture

When a laser length measuring system is applied to short distance displacement, reflected laser beam from reflector should be captured at exact point. However, optical aperture of beam detector has some area and it allows misalignment of setting. The return beam should always be aimed in the detector centre as good as possible, especially for short travels.

4.2.4.7 Interaction between standard and setup

If the reference artefact used is of significant weight or size, these features can affect the mechanical deformation of the setup construction. The temperature distribution, air flow and vibration conditions in the vicinity of the measurement setup can also be affected.

4.2.4.8 Warming up

Mechanical and optical instruments or those using electrical circuits generate heat during their operations. Warming up before measurement is necessary to minimize thermally-induced variations caused by such heat generation and target machine heat up (to reach thermal stability).

4.2.4.9 Conditioning

A series of filters and algorithms are used for generation of an image (value) of the measured physical quantity from the output of the sensor.

If sensors have nonlinear behaviours, such non-linearities can be corrected during the signal conditioning.

4.2.4.10 Number of measurements

A small number of measuring points along an axis can miss important errors. This increases the measurement uncertainty. The measuring point density should therefore be chosen sufficiently high.

A large number of repetitions does not decrease measurement uncertainty. It can decrease measurement uncertainty for any mean values if repeatability of measuring instrument is a significant contributor to measurement uncertainty.

4.2.4.11 Order of measurements

A measurement planning is used to define the order of measurement. For example, measurements along the directions of machine coordinate system should be carried out first.

4.2.4.12 Duration of measurement

Environment conditions can affect the object under test and/or the measuring equipment. Any measurement that needs a small amount of time diminishes the requirements for constant environmental conditions.

Any measurement that needs a large amount of time is more affected by changes of the environmental conditions.

© ISO 2018 – All rights reserved
Documents
Document Sharing Hub
Full document details: PD ISO/TR 230-11:2018

4.2.4.13 Alignment

Alignment between the machine motion axis and the measurement axis (e.g. axis of the probe motion) should be carefully adjusted. Misalignments cause Abbe error and cosine error (see also 4.2.4.1 and 4.2.4.2).

4.2.4.14 Choice of reference artefact or feature

Selecting a suitable reference is necessary when the measurement is performed from the point of view of the specified tolerance. The ten percent rule should be adopted when a specified reference is not mentioned.

NOTE For many years, the 10 percent rule [23][24] has been applied for selecting measuring instruments. Today, the uncertainty due to the reference artefact (measuring instrument) is one of the contributors to the measurement uncertainty that is stated together with each measurement result. For proving conformance or non-conformance with specifications, ISO 14253-1 is applied. However, applying the 10 percent rule is still a sound rule of thumb for selecting a suitable reference artefact.

4.2.4.15 Choice of apparatus

Suitable apparatus must be selected when measurement is performed from point of view of resolution, working length, possible fixing method, possible placing area, etc.

4.2.4.16 Strategy of measurement

Strategies include the sequence of measurements, resolution of instruments used, selection of environments etc. These items directly influence data quality (i.e. accuracy, uncertainty).

4.2.4.17 Fixturing

All instruments used for measurement of relative displacement between tool side and work side are influenced by the motion of the machine tool. The instrument and its target are securely and properly fixed to the components of interest. Undesirable instrument or sensor mounting can generate undesirable deformation of the instrument or the target. When fixing the component of instrument, fixing torque/force should be considered not to deform the instrument. Improper fixing point also generates thermal deformation. Supports for dial gauges and electronic probes should be of sufficient stiffness to prevent unwanted deflections. See also Annex C.

4.2.4.18 Number of measuring points

The number of measuring points relate to the quality of extraction of error/deviation feature of the target. A too small number can result in a poor representation of the measurand. A too large number causes longer times to complete the measurement, and is therefore influenced by other conditions (e.g. thermal effects) as well as by the difficulty of data processing.

4.2.4.19 Probing principle and its strategy

Selection of probing principle such as contact/non-contact affects the results. Usually, non-contact probing can be useful for the measurement involving rapidly moving component. In case of evaluation of mechanical contact or interfacing items, the contact probing method can be a more suitable method for the measurement.

4.2.4.20 Alignment of probing system

The stylus of the dial gauge or electronic probe should be normal to the surface to be measured.

© ISO 2018 – All rights reserved

Documents
Document Sharing Hub
Full document details: PD ISO/TR 230-11:2018

4.2.4.21 Reversal measurement

See A.2, ISO 230-1:2012, 8.2.2.1.1 and [25].

4.2.4.22 Multiple redundancy/error separation

A series of measurement data such as with different set up, different time can be applied to error reduction process. These data can include circumstances variance, operator error, set up, etc. These errors can be separated and reduced from original error.

4.2.4.23 Dead path error (laser interferometer)

Dead path is an error associated with changes in the environmental conditions during a measurement. In simple terms, it is an error due to an uncompensated length of laser-beam path, and it occurs when the atmospheric conditions surrounding the laser beam change (causing a change in the laser wavelength) and when the temperature in the material on which the optical interferometer and target reflector are mounted changes (causing the distance between the interferometer and retroreflector to increase or decrease). The dead path area of the laser measurement path is the distance between the optical interferometer and the reset (or 0) position of the measurement (L1). If there is no motion between the optical interferometer and the corner cube (retroreflector) and the environmental conditions surrounding the laser-beam path change, then the wavelength will change over the entire path (L1 + L2). If the velocity-of-light compensation value changes to correct for the new environmental conditions, the laser measurement system will correct for the laser-wavelength change over the distance L2, but no correction will occur over the dead path distance L1 (see Figure 4).

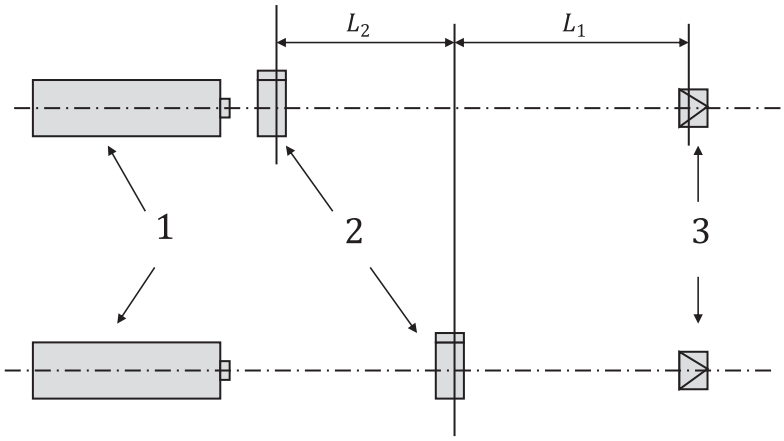

Key

1 laser head

2 interferometer

3 retro reflector

L_1 dead path distance

L_2 change over distance

Figure 4 — Dead path error

NOTE Software compensation also applicable to minimize this effect.

4.2.4.24 Other setup conditions

Specific setup and procedures specified by the instrument manufacturer, e.g. initialization or homing procedures, should be applied accordingly.

© ISO 2018 – All rights reserved
Documents
Document Sharing Hub
Full document details: PD ISO/TR 230-11:2018

4.2.5 Software and calculation factors

4.2.5.1 Rounding/quantifications

The resolution of a measuring instrument (analogue or digital) or the step in last digit/decimal of a measured value or rounded measured value, whichever is largest, causes an uncertainty component, U_{XX}:

$$U_{XX} \approx 0{,}3 \times d$$

where d is the resolution or the step in the last digit or decimal.

The uncertainty component, U_{XX}, is based on a rectangular distribution with limit value $a = 0{,}5 \times d$ (see ISO 14253-2:2011, 8.4.4).

4.2.5.2 Algorithms

Algorithms used for data processing should be suitable to the measurement items such as stable or dynamic, round part or flat part, etc. Misapplications of the software algorithms lead to completely different results.

4.2.5.3 Sampling

Depending on the nature of the measurement, data can be collected based on time or spatial intervals (called sampling period). Chosen sampling period influences the measurement results. For example, if the spatial sampling period on the surface is too large, captured data cannot indicate their true features on the surface. In the case of time-based measurement, sampling period directly influences the frequency response of the measurement.

4.2.5.4 Filtering

Filtering techniques can be applied when measurement data was contaminated by electrical or mechanical noise. The type of filtering, e.g. cut-off frequency, bandwidth, can sometimes distort original data.

4.2.5.5 Certification of algorithm

Certified test data can be used for certification of algorithms.

4.2.5.6 Interpolation/extrapolation

Digital equipment such as linear scales and rotary encoders include interpolation hardware/software to increase their resolution. Too much interpolation can generate non-linearity of the scale reading, and also reduces the frequency response.

4.3 Measuring equipment calibration (ISO 10012)

4.3.1 General

The measuring equipment should be calibrated at regular intervals against known reference standards, based on the metrological requirements. If necessary, calibration charts should be supplied to show the condition of the equipment. Recommended sequence is as follows:

a) regular calibration interval;

b) using calibration results for estimation of measurement uncertainty;

c) using calibration results (if necessary, calibration charts) to correct readings and, thus, reducing uncertainty due to instrument/artefact calibration uncertainty.

© ISO 2018 – All rights reserved

Documents
Document Sharing Hub
Full document details: PD ISO/TR 230-11:2018

4.3.2 Manufacturer and supplier of measuring instruments

The manufacturer/supplier should calibrate the suggested metrological characteristics and document the conformance with the stated MPE values (see ISO 14978:2006, Clause 8).

4.3.3 User of measuring instruments

The metrological characteristics necessary for the intended use of the instrument should be chosen and should be verified by calibration (or verification tests). The calibrated value(s) of the metrological characteristic(s) should be stated with the related measurement uncertainty/uncertainties, and/or the calibrated values of the metrological characteristic should be proven to be in conformance with the actual MPE value(s).

NOTE In normal use of measuring instruments, it is often possible and appropriate to limit the number of requirements (different MPEs) and the extent of resources used to prove that the measuring instrument functions in accordance with the set-up requirements (MPLs and MPEs).

4.3.4 Measurement uncertainty

The acceptable amount of measurement uncertainty influences the number of points required to prove that a measuring instrument has a particular metrological characteristic function, and/or that this metrological characteristic is in conformance with a particular MPE value or function. A large number of points reduce the measurement uncertainty. A small number of points increase the measurement uncertainty. The required number of points therefore depends on the acceptability of the measurement uncertainty.

4.4 Comparison of measurement results by instruments using different measurement principles

There are multiple measuring instruments with different measurement principles that can be used to measure the same geometric errors. For example, squareness can be measured by square artefacts, laser angle interferometer and optical square with auto collimator. The measured results should be equal within a certain uncertainty level. When the measured results are compared, the compatibility should be checked using the following methods.

a) Absolute method: same reference artefacts are used for the comparison test. The same reference artefact is measured by the target instruments at the same time, and the results are compared. The artefacts used for this comparison should be calibrated and traceability to relevant International Standards should be guaranteed.

b) Relative method with calibrated devices at the same time: the accuracy of the device used for this test is checked by reference artefacts. Compatibility test should be performed simultaneously, and outputs are compared.

c) Relative method with calibrated devices at different times: the accuracy of the device used for this test is checked by reference artefacts. Compatibility tests are performed at different times, and its output compared.

d) Relative method with uncalibrated device at the same time: uncalibrated device such as real machine tool is applied to the test. Compatibility test is performed at same time, and outputs are compared.

e) Relative method with uncalibrated device at different times: uncalibrated devices are applied to the test. Compatibility test are performed at different times, and outputs are compared. Repeatability of the device is checked beforehand.

If measurement items of instruments to be checked include motion characteristics, then test speed, filtering, sampling rate, location of test, etc., should be (as much as possible) maintained constant and recorded.

© ISO 2018 – All rights reserved
Documents
Document Sharing Hub
Full document details: PD ISO/TR 230-11:2018

Comparison test should be repeated at least ten times. Values of average and measurement uncertainties should be computed.

Comparison is performed for each different test parameter, e.g. in case of circular test, diameter, G*xx*, profile, etc., is tested and compared separately.

Figure 5 indicates the rule of judgment for the comparison.

— If two specific conformance zones (see 2) are overlapped (see 3) as shown in Case 1, two results can be said to be identical and compatibility is satisfied, and can be used without any remarks.

— If two 2U (expanded measurement uncertainty) zones of specific instruments are overlapped (see 3) as shown in Case 2, compatibility is satisfied and results from two instruments can be used as same purpose.

— If there are no overlapping zones, then results from two instruments cannot be said to be compatible.

If different instrument types are applied without any comparison data, then agreement between manufacturer/supplier and user is necessary.

NOTE 2U zone can be obtained from preliminary experiences in the workshop.

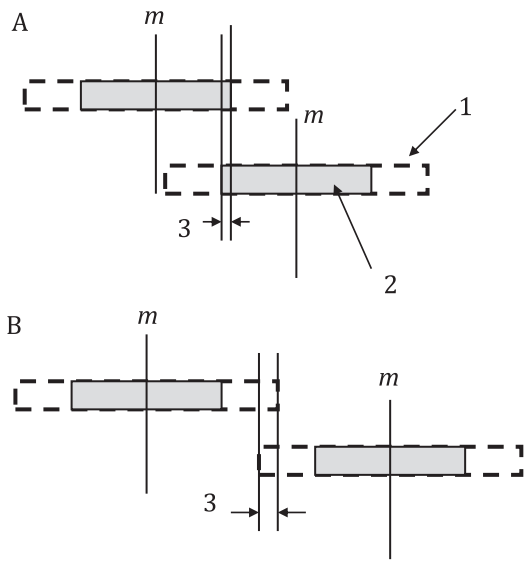

Key

1 2U zone

2 specific conformance zone

3 overlap zone

m mean value

A case 1

B case 2

Figure 5 — Comparison between two different measuring instruments

5 Description of measuring instruments

Specific measuring instruments are described in this clause. Instruments are categorized and summarized in a table. Categorization method depends on its application and basic features as shown Table 3.

© ISO 2018 – All rights reserved

Documents
Document Sharing Hub
Full document details: PD ISO/TR 230-11:2018

Table 3 — Instrument category and clause number

Clause number	Instrument category	Remark
6	Mechanical artefacts	Including length standard device
7	Length and displacement measuring instruments	From long range to short range measurement
8	Straightness measuring device	
9	Squareness measuring device	
10	Flatness measuring device	
11	Angle measurement instrument	
12	Special measuring device	

Each table indicates its name, size, measuring range, MPE, uncertainty of measurement, operating environment related standard, figure and remarks. An example of table is indicated in Table 4. The contents of tables are examples only, and are for machine tool measurements in the workshop. If there are some related standards for its specifications, contents are indicated as [recommended] or [typical].

Annex B indicates existing ISO and national standards for measuring equipment.

Table 4 — Example of the table format description

1	Name of artefact	Indication of instrument or measuring method name.
2	Description	Simple description of instrument or measuring method.
3	Size in mm	Example or recommended sizes are described.
4	Tolerance MPE	Example or recommended MPE is described.
5	Reduced (corrected) MPE at specific points in µm	If instrument or artefact is corrected by calibration, example or recommended improved MPE is described.
6	Surface finish	In case of artefacts, example or recommended surface quality at measuring point is indicated.
7	Surface hardness	In case of artefacts, example or recommended surface hardness at measuring point is indicated for each material used.
8	Operating environment	Remarks for operating environment such as temperature is described.
9	Long-term stability	—
10	Equivalent thermal expansion coefficient [µm/(m°C)]	Total thermal expansion coefficient is indicated.
11	Related standards	If there are standards for the instrument specification, it is described here.
12	Reference to the ISO 230 series	Application example in the ISO 230 series are indicated.
13	Uncertainty of measurement	Major clause numbers of uncertainty contributor name or descriptions are referred to in 4.2.
14	Remarks	Additional remarks are described.
15	Examples of figures	Appearance is indicated. Also refer to an example in ISO 230-1.

6 Mechanical artefacts for general use

6.1 General

A mechanical artefact is a reference material intended to define, realize, conserve or reproduce a unit or values of a quantity to serve as a reference in the machine workshop. Therefore, the artefact should be stable against any changes in conditions, and easy to mount on the machine tool side. An artefact is influenced by the gravity, therefore its supporting method influences the accuracy. Also, it is influenced by temperature change due to its thermal expansion. Therefore, the characteristics of thermal

© ISO 2018 – All rights reserved
Documents
Document Sharing Hub
Full document details: PD ISO/TR 230-11:2018

behaviour should be clearly stated. Internal thermal gradients of artefacts result in shape distortions and dimensional changes. The self-calibration method can be applied to most of mechanical artefacts (see ISO 230-1:2012, 8.2.2.1.1). For uncertainty contributors, see Table D.1.

Table 5 indicates quick references for mechanical artefacts.

© ISO 2018 – All rights reserved

Documents
Document Sharing Hub
Full document details: PD ISO/TR 230-11:2018

Table 5 — Quick references for mechanical artefacts

Name of artefacts		Property of measurement								
		Straightness	Parallelism	Squareness	Roundness	Radial offset	Flatness	Profile	Position	Positioning
Reference straightedge		+	+				+			
Test mandrels	with taper shanks	+	+			+				
	7/24 taper shanks	+	+			+				
	between centres	+	+			+				
Reference square	plane and edge	+		+						
	cylindrical square	+	+	+						
	block-type square	+	+	+						
Reference cube		+	+	+			+			
Reference surface plate		+	+				+			
Reference sphere			+		+	+		+	+	
Reference 1D ball array		+								+
Reference 2D ball array		+	+	+						+
Reference step gauge										+
Reference gauge block									+	

NOTE "+" indicates applicable property of motion.

Full document details: PD ISO/TR 230-11:2018

Documents
Document Sharing Hub

© ISO 2018 – All rights reserved

6.2 Reference straightedge

1	Name of artefact	Reference straightedge					
2	Description	A straightedge is a material representation of a straight reference line, with a particular MPE, by reference to which deviations from straightness or flatness can be determined. There are two principal types of straightedge: — the bow-shaped straightedge with a single working surface [see Figure 6 a)]; — the straightedge with two parallel working surfaces [see Figure 6 b)]. The latter type can be: — uniform-section with a solid or lightened web [see Figure 6 c)]. — of plain rectangular cross-section.					
3	Recommended size	Measuring length + 40 mm					
4	Recommended measuring length, L, in mm	300	500	1 000	1 500	2 000	3 000
5	Recommended straightness MPE and flatness MPE of working surfaces in µm: less than (2 + L/250) µm local tolerance, 5 µm for >300 mm	3	4	6	8	10	14
6	Recommended parallelism MPE of working surfaces in µm less than 1,5(2 + 0,01 L) µm	5	10	15	25	30	45
7	Recommended straightness of side surfaces in µm less than 10(2 + 0,01 L) µm	30	50	100	150	200	300
8	Recommended parallelism of side surfaces in µm less than 15(2 + 0,01 L) µm	45	70	150	220	300	450
9	Example of reduced (corrected) straightness MPE at specific points in µm	0,1 to 1	0,5 to 2	1 to 2	2 to 4	2 to 5	3 to 5
10	Permissible natural deflection	0,01 mm per 1 000 mm, when resting on two supports situated at the extreme ends. Exact maximum value should be marked on one of the faces.					
11	Recommended squareness MPE of side faces to working surfaces	5 µm for a measuring length of 10 mm					
12.1	Recommended surface finish	Less than 0,8 µm roughness, R_t. Finely ground, lapped or scraped.					
12.2	Recommended surface hardness	Hv490 to Hv620					
13	Operating environment	Workshop conditions (see ISO 230-3:2007, Table C.1)					
14	Long-term stability	—					

© ISO 2018 – All rights reserved

Documents
Document Sharing Hub
Full document details: PD ISO/TR 230-11:2018

15	Equivalent thermal expansion coefficient [µm/(m°C)[(influences the bending in case of thermal gradients)	Depends on material used: steel: 11; ceramics: 8; ultra-low expansion (ULE) glass: 0,1.
16	Related standards	BS 5204, DIN 874, JIS B7514
17	Reference to ISO 230 series	ISO 230-1:2012, 8.2.2.1, 10.3.2.3, 12.2.3.1 and 12.2.3.2
18	Measurement uncertainty	Major contributors: See Table D.1
		EXAMPLE: —
19	Remarks	When the straightedge is used with a level, the width of the working faces should not be less than 35 mm. In case of vertical direction measurement, support distance should be 5 $L/9$. Table 6 indicates recommended supporting condition of straightedge.
20	Example of figures	See Figure 6

© ISO 2018 – All rights reserved
Documents
Document Sharing Hub
Full document details: PD ISO/TR 230-11:2018

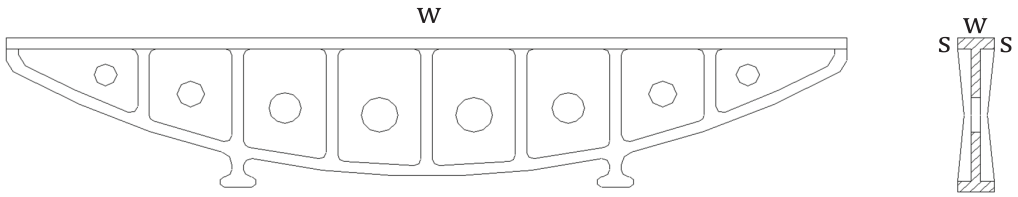

a) Bow-shaped

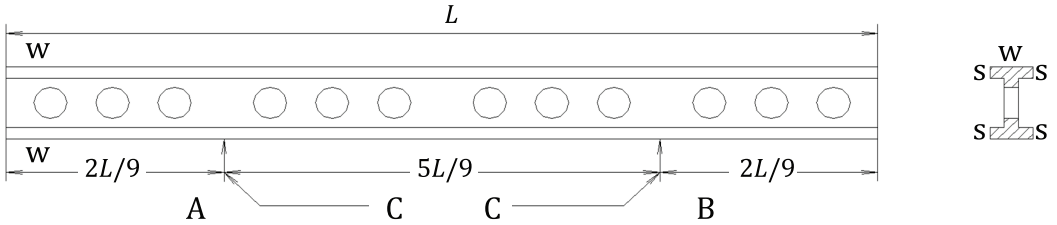

b) With two parallel surfaces with lightened web

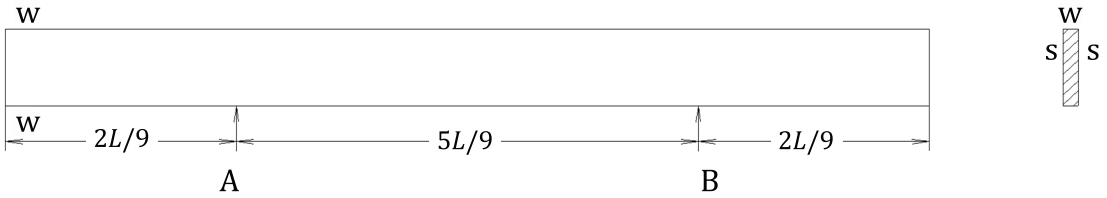

c) Plain rectangular section

Key

A, B	support points
C	best supports
L	working length
W	working surface
S	side surface

Figure 6 — Examples of straightedge

© ISO 2018 – All rights reserved

Documents
Document Sharing Hub
Full document details: PD ISO/TR 230-11:2018

Table 6 — Supporting condition of straightedge

No.	Length in mm		Diagram	Broad type		Normal type	
	Working	Total[a]		Section	Mass[b] kg	Section	Mass[b] kg
1	300	340	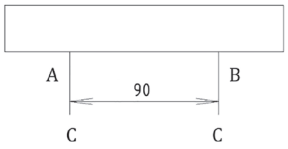	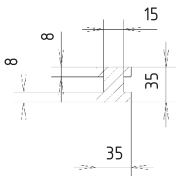	2	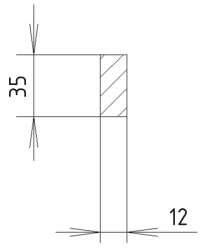	1
2	500	540	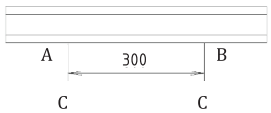	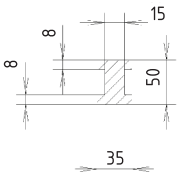	4	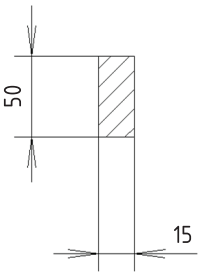	3
3	800	840	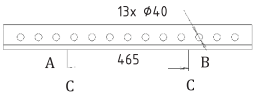			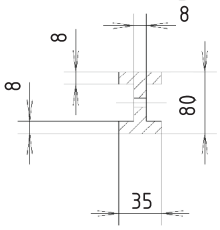	5
4	1 000	1 040	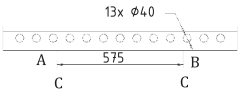			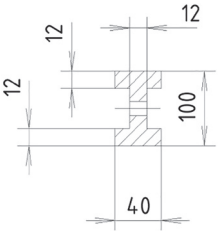	12
5	1 600	1 640	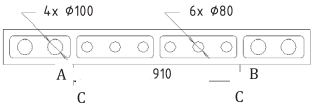			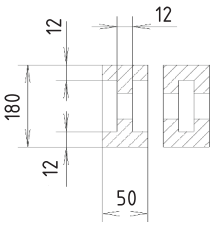	33

[a] The total length is a little greater than the working length, so that inspection can be made without having to use the ends of the straightedge, which are more difficult to machine accurately.

[b] Masses are relative to plain cast iron; they are slightly greater than steel.

© ISO 2018 – All rights reserved

Documents
Document Sharing Hub

Full document details: PD ISO/TR 230-11:2018

6.3 Test mandrels with taper shanks

1	Name of artefact	Test mandrel with taper shank					
2	Description	A test mandrel represents, within given limits, the axis which is to be checked, either for run-out or for location (position and orientation) in relation to other components of the machine. Test mandrels have a tapered shank for inserting in the socket of the machine to be tested, and a cylindrical body which is used as a reference for the measurements.					
3	Recommended size in mm	Measuring length + 40 mm + taper shank length					
4	Recommended measuring range (length of straight part) in mm		75	150	200	300	500
5	Recommended natural deflection (Morse taper) in µm		0,65	1,5	1,8	3,3	5,8
6	Recommended straightness MPE (Morse taper) in µm		1,6	2,1	2,5	4	6,2
7	Recommended total run-out along entire length in µm		2	2	3	3	3
8	Recommended maximum variation in diameter of cylindrical part in µm		2	2	3	3	3
9	Example of reduced (corrected) straightness MPE at specific points in µm		0,8	0,8	1,0	1,0	1,5
10.1	Recommended surface finish		less than 0,8 µm roughness, R_t				
10.2	Recommended surface hardness	Hv490 to Hv620 plated or un-plated					
11	Recommended materials	Hardened and stabilized steel					
12	Operating environment	Workshop conditions					
13	Long-term stability	Stress free heat treatment required					
14	Equivalent thermal expansion coefficient in µm/(m °C)	Depends on material used: steel: 11; ceramics: 8.					
15	Related standards	JIS B7545					
16	Reference to ISO 230 series	ISO 230-1:2012, 10.1.2 to 10.1.5, 10.2, 10.4.4, 12.3.2.4, 12.3.2.6, 12.3.3, 12.3.4, 12.4.6 and 12.5					

© ISO 2018 – All rights reserved

Documents
Document Sharing Hub
Full document details: PD ISO/TR 230-11:2018

17	Uncertainty of measurement	Major contributors: see Table D.1
		EXAMPLE: –
18	They are made of hardened and stabilized steel, either un-plated or plated with hard chromium. They also have the following characteristics: a) ground and lapped centres, recessed for protection at the ends, for purposes of manufacture and inspection; b) four reference lines are spaced at 90° (1, 2, 3 and 4); c) in the case of relatively slow Morse and metric tapers, the mandrels are self-holding in the socket, see Figure 7 a) a. A threaded portion is provided to receive a nut for extracting the mandrel from the socket; d) in the case of relatively steep tapers [see Figure 7 a) b], a tapped hole is provided for fixing the mandrel by means of a threaded retaining bar, or a retention knob as used with an automatic tool-changing device [see Figure 7 a) c]. Finally, in order to avoid the mandrel being reversed end for end when grinding, the instrument can also be fitted with an extension P of a length from 14 mm to 32 mm and a diameter slightly smaller than that of the cylindrical part [see Figure 7 a) d]. Figure 7 b) to Figure 7 e) shows, as examples, a series of suitable mandrels. The external dimensions (diameter and length) and the profile of the bore of these mandrels have been determined such that (with the exception of those with Morse tapers No. 0 and No. 1) the deflection at the free end, due to the overhanging weight of the mandrel and the deflection caused by the pressure of a dial gauge on it, is minimized when testing with these instruments. The deflections have been calculated for E = 206 kN/mm^2; even for somewhat smaller values (E = 176 kN/mm^2 to 186 kN/mm^2) the deflections are still negligible. In the case of the 7/24 taper, table indicates the correspondence between the cylindrical portions and the dimensions of the cone. If the mandrels with dimensions differing from those in Figure 7 are used for checking alignment, their deflection should be distinctly marked on them and taken into account when testing machines. Finally, attention is drawn to the fact that mandrels above 5 kg in mass tend to cause deflection of a horizontal spindle into which they are inserted. NOTE The cone is perfectly fit within the socket. This is checked carefully, for example with Prussian blue. To measure the run-out, the mandrel should be successively inserted in the spindle in four positions, each at 90° to the previous, and the mean of the four results taken. To check the accuracy of the lateral position of a component or of parallelism, the test should be made successively on two opposite reference lines on the cylindrical surface of the mandrel, turning the mandrel and the spindle through 180° (see ISO 230-1:2012, 8.2.2.1.1). After inserting a mandrel in a spindle, time should be allowed to elapse for dissipating the heat of the hand of the operator and to allow the temperature to stabilize. In the case of mandrels with Morse tapers No. 0 and No. 1, it is necessary to take into account their natural deflection. They should only be used with a dial gauge reading to 0,001 mm and having a force not exceeding 0,5 N. The dial gauge should preferably be applied to the underside of the mandrel so as to oppose its natural sag Table 7 indicates test mandrel cylindrical parts of 7/24 taper shanks. Figure 7 e) indicates HSK type shank. For details on dimensions, see ISO 12164-1.	
19	Example of figures	see Figure 7 a), b), c), d) and e)

© ISO 2018 – All rights reserved
Documents
Document Sharing Hub
Full document details: PD ISO/TR 230-11:2018

Dimensions in millimetres (mm)

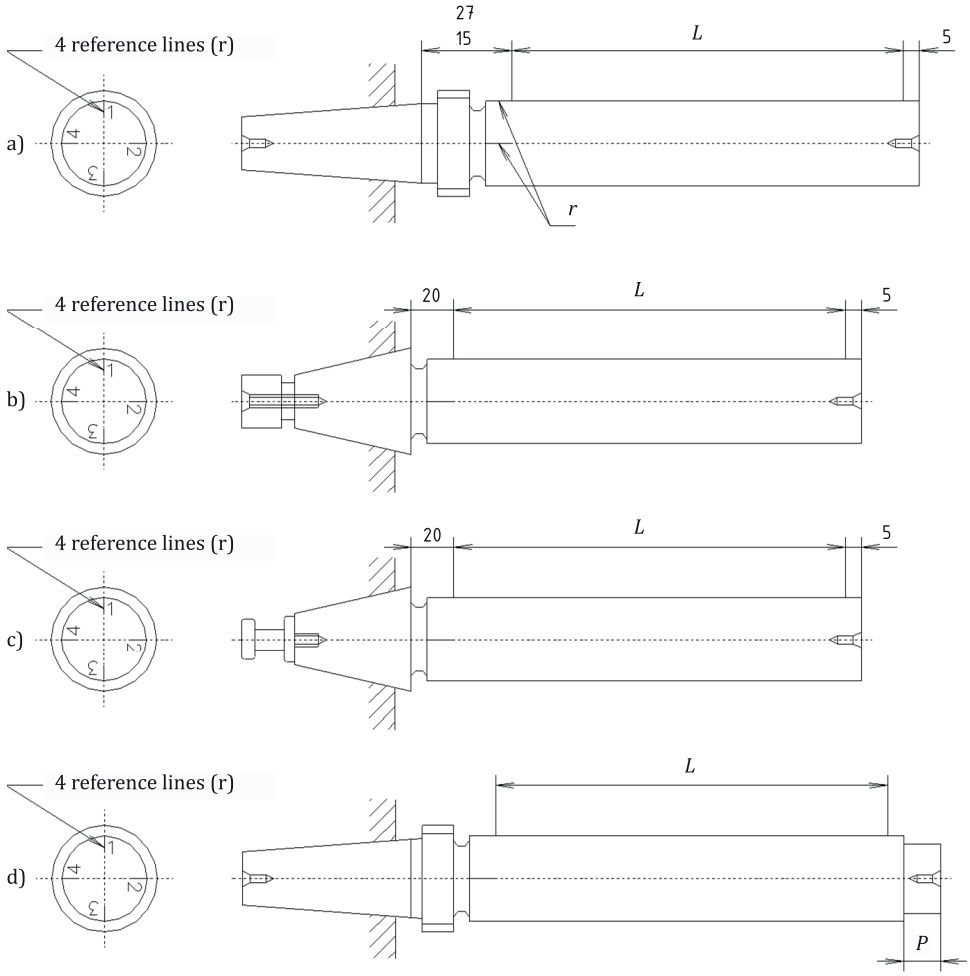

a) Small size taper shank mandrels [a) to d)]

© ISO 2018 – All rights reserved

Documents
Document Sharing Hub
Full document details: PD ISO/TR 230-11:2018

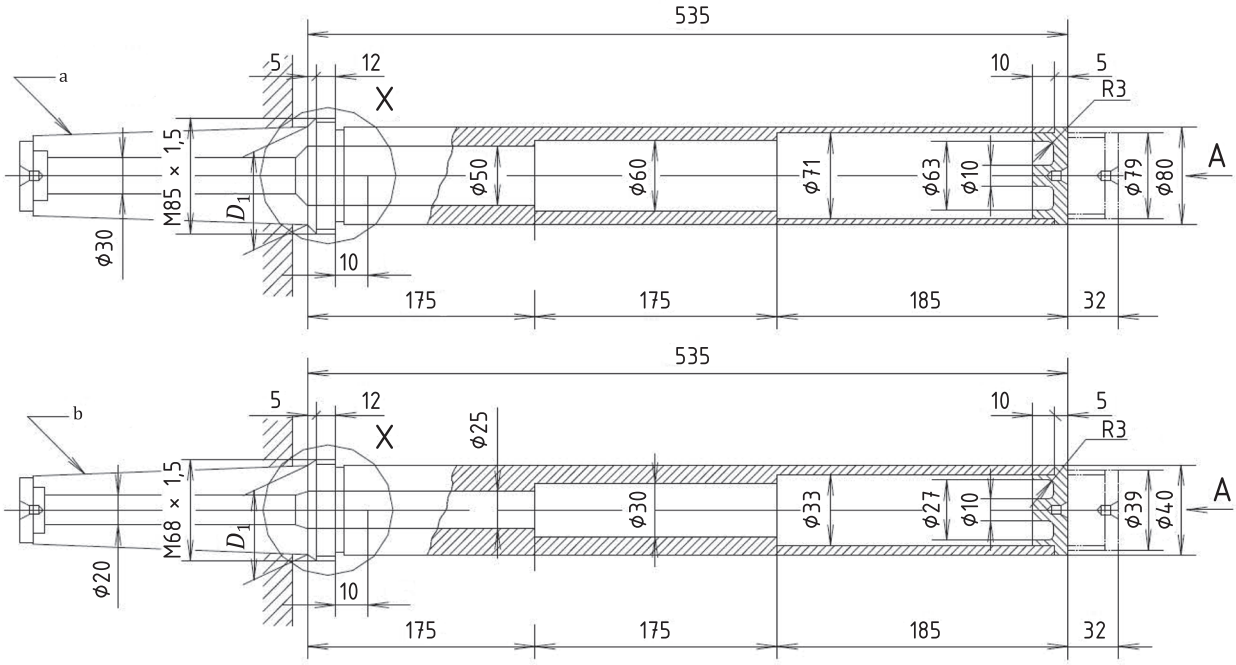

b) Larger metric and Morse taper shank mandrels

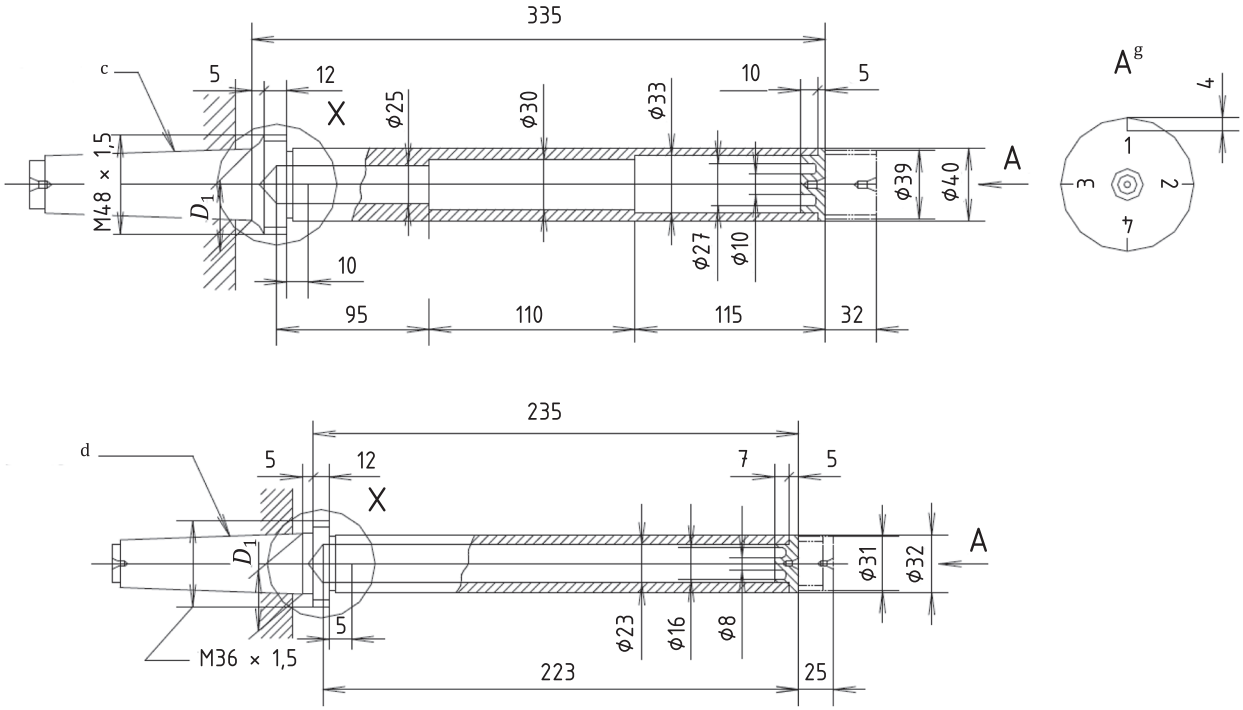

c) Morse 3, 4 and 5 taper shank mandrels

© ISO 2018 – All rights reserved
Documents
Document Sharing Hub
Full document details: PD ISO/TR 230-11:2018

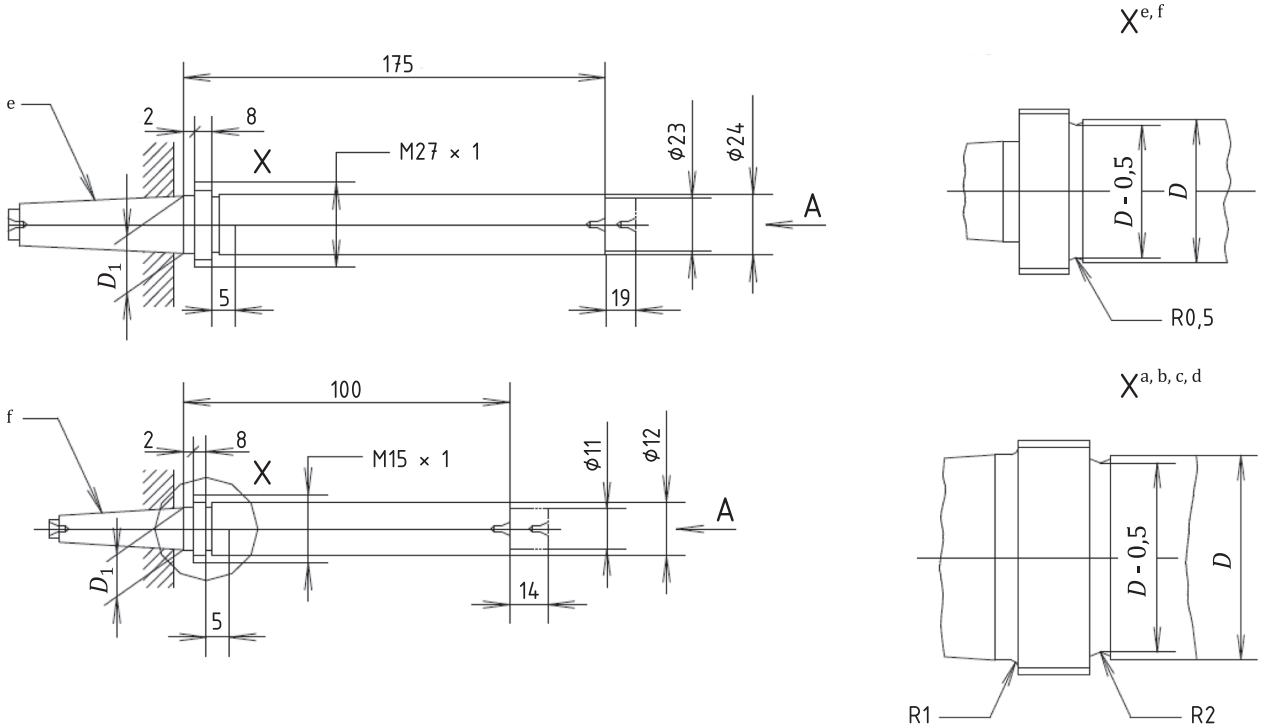

d) Morse 0 to 2 taper shank mandrels

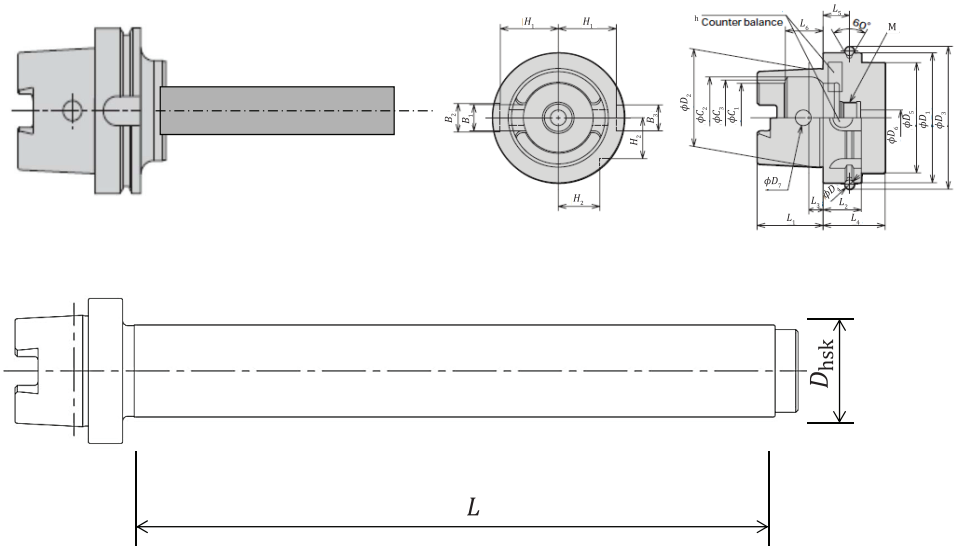

e) HSK type mandrel

Key

L	effective length
P	cylindrical extension
r	reference lines
a	Metric 80 and larger.
b	Morse 6.
c	Morse 4 and 5.
d	Morse 3.
e	Morse 2.

© ISO 2018 – All rights reserved

Documents
Document Sharing Hub
Full document details: PD ISO/TR 230-11:2018

f Morse 0 and 1.

g Partial.

h Counter balance.

Example of size, L, and diameter, D_{hsk}

D_{hsk}	32	40	40	63
L	150	200	300	300

NOTE The four lines 0,1 mm wide, spaced at 90° marked on the cylindrical parts, are reproduced in alignment and numbered 1 to 4 on the mandrel end.

Figure 7 — Examples of test mandrel

An extracting nut should be supplied with each mandrel.

For particulars of the tapered shank, refer to the ISO specification, e.g. D1.

The mandrel should have a ground and lapped centre of the protected type at each end.

The part indicated in dashed line is that of the mandrel shown in Figure 7 a): this extension, P, has been added to assist manufacture. The total length will be increased by this amount, as also that of the first bore, the end plug being unchanged.

Special shape such as cone and taper can be applicable for reference plane.

Table 7 — Test mandrel Cylindrical parts of 7/24 taper shanks

Taper 7/24 No.	30	40	45	50	
				Short mandrel	Long mandrel
Measuring length in mm	200	300	300	300	500
Mandrel Morse No. to which cylindrical part is adapted	3	4 and 5	4 and 5	4 and 5	6

6.4 Mandrels between centres

1	Name of artefact	Mandrel between centres			
2	Description	While a test mandrel with a taper shank serves as a material representation of an axis of rotation, a mandrel mounted between centres represents simply a straight line passing between two points. The axis of such a mandrel should be straight and its exterior surface truly cylindrical. It has, at each end, four reference marks located in two perpendicular axial planes, and centres recessed for protection.			
3	Recommended size in mm	300	500	1 000	1 600
4	Recommended outside diameter in mm	40	63	80	125
5	Recommended inside diameter in mm	0	50	61	105
6	Recommended mass without end plugs in kg	1,5 to 3	2,7 to 4,5	8,3 to 16,5	28,2 to 45
7	Recommended maximum diameter variation in µm	3	3	4	5
8	Recommended straightness MPE in µm	1	2	2	2
9	Recommended cylindricity MPE in µm	4	4	5	6
10	Recommended maximum run out in µm	3	3	7	10

© ISO 2018 – All rights reserved
Documents
Document Sharing Hub
Full document details: PD ISO/TR 230-11:2018

Table 7 *(continued)*

11	Example of reduced (corrected) straightness MPE at specific points in µm	2	2	3	3
12	Recommended maximum natural deflection in µm E = 206 kN/mm^2	0,02 to 0,04	0,1 to 0,7	0,5 to 8	3 to 19
13.1	Recommended surface finish	Less than 0,8 µm roughness, R_t			
13.2	Recommended surface hardness	The cylinder should be hardened and can be hard chrome-plated to increase its resistance to wear. HV490 for steel, Hv600 for ceramics.			
14	Recommended materials	Steel or Al_2O_3.			
15	Operating environment	Workshop conditions.			
16	Long-term stability	Weld-free hot-drawn tubes are used for the material, therefore, it is stabilized before final grinding.			
17	Equivalent thermal expansion coefficient in µm/(m°C)	Depends on material used: steel: 11; ceramics: 8.			
18	Related standards	JIS B7545			
19	Reference to ISO 230 series	ISO 230-1:2012, 10.2.1			
20	Uncertainty of measurement	Major contributors: see Table D.1.			
		EXAMPLE: —			
21	Example of figures	see Figure 8			

Dimensions in millimetres

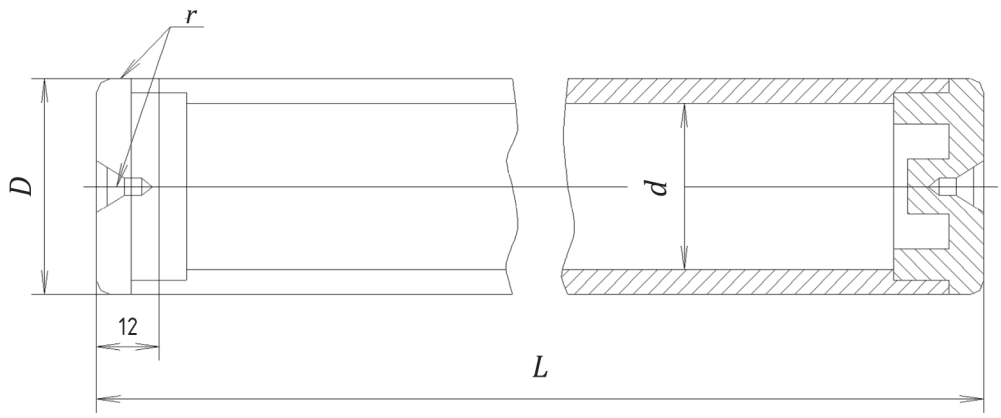

Key

D external diameter

d internal diameter

L total length

r reference marks

Figure 8 — An example of mandrel between centres

© ISO 2018 – All rights reserved

Documents
Document Sharing Hub
Full document details: PD ISO/TR 230-11:2018