PUBLISHED DOCUMENT

PD ISO/TR 230-8:2009

Test code for machine tools

Part 8: Determination of vibration levels

ICS 17.160; 25.080.01

NO COPYING WITHOUT BSI PERMISSION EXCEPT AS PERMITTED BY COPYRIGHT LAW

British Standards

Full document details: PD ISO/TR 230-8:2009

National foreword

This Published Document is the UK implementation of ISO/TR 230-8:2009.

The UK participation in its preparation was entrusted to Technical Committee MTE/1/2, Machine tools - Accuracy.

A list of organizations represented on this committee can be obtained on request to its secretary.

This publication does not purport to include all the necessary provisions of a contract. Users are responsible for its correct application.

Compliance with a British Standard cannot confer immunity from legal obligations.

This Published Document was published under the authority of the Standards Policy and Strategy Committee on 31 January 2010

© BSI 2010

ISBN 978 0 580 64734 5

Amendments/corrigenda issued since publication

Date	Comments

Documents
Document Sharing Hub

Full document details: PD ISO/TR 230-8:2009

TECHNICAL REPORT

ISO/TR 230-8

First edition
2009-01-15

Test code for machine tools —

Part 8: Determination of vibration levels

Code d'essai des machines-outils —

Partie 8: Détermination des niveaux de vibration

Reference number
ISO/TR 230-8:2009(E)

Documents
Document Sharing Hub
© ISO 2009

Full document details: PD ISO/TR 230-8:2009

PDF disclaimer

This PDF file may contain embedded typefaces. In accordance with Adobe's licensing policy, this file may be printed or viewed but shall not be edited unless the typefaces which are embedded are licensed to and installed on the computer performing the editing. In downloading this file, parties accept therein the responsibility of not infringing Adobe's licensing policy. The ISO Central Secretariat accepts no liability in this area.

Adobe is a trademark of Adobe Systems Incorporated.

Details of the software products used to create this PDF file can be found in the General Info relative to the file; the PDF-creation parameters were optimized for printing. Every care has been taken to ensure that the file is suitable for use by ISO member bodies. In the unlikely event that a problem relating to it is found, please inform the Central Secretariat at the address given below.

COPYRIGHT PROTECTED DOCUMENT

© ISO 2009

All rights reserved. Unless otherwise specified, no part of this publication may be reproduced or utilized in any form or by any means, electronic or mechanical, including photocopying and microfilm, without permission in writing from either ISO at the address below or ISO's member body in the country of the requester.

ISO copyright office
Case postale 56 • CH-1211 Geneva 20
Tel. + 41 22 749 01 11
Fax + 41 22 749 09 47
E-mail copyright@iso.org
Web www.iso.org

Published in Switzerland

Documents
Document Sharing Hub
© ISO 2009 – All rights reserved

Full document details: PD ISO/TR 230-8:2009

Contents

Page

Foreword ... v

Introduction ... vi

1 Scope ... 1

2 Normative references ... 1

3 Terms and definitions ... 2

4 Theoretical background to the dynamic behaviour of machine tools ... 13
4.1 Nature of vibration: basic concepts ... 13
4.2 Single-degree-of-freedom systems ... 16
4.3 Mathematical considerations ... 20
4.4 Graphical representations ... 22
4.5 Different types of harmonic excitation and response ... 26
4.6 More degrees of freedom ... 33
4.7 Other miscellaneous types of excitation and response of machine tools ... 40
4.8 Spectra, responses and bandwidth ... 43

5 Types of vibration and their causes ... 44
5.1 Vibrations occurring as a result of unbalance ... 44
5.2 Vibrations occurring through the operation of linear slides ... 48
5.3 Vibrations occurring externally to the machine ... 49
5.4 Vibrations initiated by the machining process: forced vibration and chatter ... 50
5.5 Other sources of excitation ... 52

6 Practical testing: general concepts ... 54
6.1 General ... 54
6.2 Measurement of vibration values ... 54
6.3 Instrumentation ... 55
6.4 Relative and absolute measurements ... 56
6.5 Units and parameters ... 56
6.6 Uncertainty of measurement ... 58
6.7 Note on environmental vibration evaluation ... 58
6.8 Type testing ... 59
6.9 Location of machine ... 59

7 Practical testing: specific applications ... 60
7.1 Unbalance ... 60
7.2 Machine slide acceleration along its axis (inertial cross-talk) ... 64
7.3 Vibrations occurring externally to the machine ... 67
7.4 Vibrations occurring through metal cutting ... 67

8 Practical testing: structural analysis through artificial excitation ... 68
8.1 General ... 68
8.2 Spectrum analysis and frequency response testing ... 69
8.3 Machine set-up conditions ... 70
8.4 Frequency analysis ... 71
8.5 Modal analysis ... 72
8.6 Cross-response tests ... 73
8.7 “Non-standard” vibration modes ... 74
8.8 Providing standard stability tests ... 75

Annex A (informative) **Overview and structure of this part of ISO 230** ... 76

Annex B (informative) **Relationships between vibration parameters** ... 77

Documents
Document Sharing Hub

© ISO 2009 – All rights reserved

Full document details: PD ISO/TR 230-8:2009

Annex C (informative) **Summary of basic vibration theory** **79**
Annex D (informative) **Spindle and motor balancing protocol** **83**
Annex E (informative) **Examples of test results and their presentation** **84**
Bibliography **93**

© ISO 2009 – All rights reserved

Documents
Document Sharing Hub
Full document details: PD ISO/TR 230-8:2009

Foreword

ISO (the International Organization for Standardization) is a worldwide federation of national standards bodies (ISO member bodies). The work of preparing International Standards is normally carried out through ISO technical committees. Each member body interested in a subject for which a technical committee has been established has the right to be represented on that committee. International organizations, governmental and non-governmental, in liaison with ISO, also take part in the work. ISO collaborates closely with the International Electrotechnical Commission (IEC) on all matters of electrotechnical standardization.

International Standards are drafted in accordance with the rules given in the ISO/IEC Directives, Part 2.

The main task of technical committees is to prepare International Standards. Draft International Standards adopted by the technical committees are circulated to the member bodies for voting. Publication as an International Standard requires approval by at least 75 % of the member bodies casting a vote.

In exceptional circumstances, when a technical committee has collected data of a different kind from that which is normally published as an International Standard ("state of the art", for example), it may decide by a simple majority vote of its participating members to publish a Technical Report. A Technical Report is entirely informative in nature and does not have to be reviewed until the data it provides are considered to be no longer valid or useful.

Attention is drawn to the possibility that some of the elements of this document may be the subject of patent rights. ISO shall not be held responsible for identifying any or all such patent rights.

ISO/TR 230-8 was prepared by Technical Committee ISO/TC 39, *Machine tools*, Subcommittee SC 2, *Test conditions for metal cutting machine tools*.

ISO/TR 230 consists of the following parts, under the general title *Test code for machine tools*:

— *Part 1: Geometric accuracy of machines operating under no-load or finishing conditions*

— *Part 2: Determination of accuracy and repeatability of positioning numerically controlled axes*

— *Part 3: Determination of thermal effects*

— *Part 4: Circular tests for numerically controlled machine tools*

— *Part 5: Determination of the noise emission*

— *Part 6: Determination of positioning accuracy on body and face diagonals (Diagonal displacement tests)*

— *Part 7: Geometric accuracy of axes of rotation*

— *Part 8: Determination of vibration levels* [Technical Report]

— *Part 9: Estimation of measurement uncertainty for machine tool tests according to series ISO 230, basic equations* [Technical Report]

© ISO 2009 – All rights reserved

Documents
Document Sharing Hub
Full document details: PD ISO/TR 230-8:2009

Introduction

The purpose of ISO 230 is to standardize methods of testing the performance of machine tools, generally without their tooling [1)], and excluding portable power tools. This part of ISO 230 establishes general procedures for the assessment of machine tool vibration.

The need for vibration control is recognized in order that those types of vibration that produce undesirable effects can be mitigated. These effects are identified principally as:

— unacceptable cutting performance with regard to surface finish and accuracy;

— premature wear or damage of machine components;

— reduced tool life;

— unacceptable noise level;

— physiological harm to operators.

Of these, only the first is considered to lie within the scope of this part of ISO 230, although the other effects may well occur incidentally. (Noise is covered by ISO 230-5, and the effect of vibration on operators is covered by ISO 2631-1.) For the most part, this necessarily limits this part of ISO 230 to the problems of vibrations that are generated between tool and workpiece.

Although this part of ISO 230 is in the form of a Technical Report, a number of acceptance tests are proposed within it. These take on the appearance of “standard tests” to be found in other parts of the 230 series. These tests may be used in this way, but, being less rigorous in their formulation, they do not carry the authority that a test in accordance with an International Standard would have.

1) In some cases, practical considerations require that real or dummy tooling and workpieces be used (see 7.1.1, 7.2.1, 7.4 and 8.3).

© ISO 2009 – All rights reserved
Documents
Document Sharing Hub
Full document details: PD ISO/TR 230-8:2009

TECHNICAL REPORT ISO/TR 230-8:2009(E)

Test code for machine tools —

Part 8: Determination of vibration levels

1 Scope

This part of ISO 230 is concerned with the different types of vibration that can occur between the tool-holding part and the workpiece-holding part of a machine tool. (For simplicity, these will generally be referred to as “tool” and “workpiece”, respectively.) These are vibrations that can adversely influence the production of both an acceptable surface finish and an accurate workpiece.

It is not aimed primarily at those who have expertise in vibration analysis and who routinely carry out such work in research and development environments. It does not, therefore, replace standard textbooks on the subject (see the Bibliography). It is, however, intended for manufacturers and users alike with general engineering knowledge in order to enhance their understanding of the causes of vibration by providing an overview of the relevant background theory.

It also provides basic measurement procedures for evaluating certain types of vibration problems that can beset a machine tool:

— vibrations occurring as a result of mechanical unbalance;

— vibrations generated by the operation of the machine’s linear slides;

— vibrations transmitted to the machine by external forces;

— vibrations generated by the cutting process including self-excited vibrations (chatter).

Additionally, this report discusses the application of artificial vibration excitation for the purpose of structural analysis. For further information on how to use this part of ISO 230, see Annex A.

NOTE Other sources of vibration (e.g. the instability of drive systems, the use of ancillary equipment or the effects of worn bearings) are discussed briefly, but a detailed analysis of their vibration generating mechanisms is not given.

2 Normative references

The following referenced documents are indispensable for the application of this document. For dated references, only the edition cited applies. For undated references, the latest edition of the referenced document (including any amendments) applies.

ISO 230-1, *Test code for machine tools — Geometric accuracy of machines operating under no-load or finishing conditions*

ISO 230-5, *Test code for machine tools — Determination of the noise emission*

ISO 1925:2001, *Mechanical vibration — Balancing — Vocabulary*

© ISO 2009 – All rights reserved

Documents
Document Sharing Hub
Full document details: PD ISO/TR 230-8:2009

ISO 1940-1:2003, *Mechanical vibration — Balance quality requirements for rotors in a constant (rigid) state — Part 1: Specification and verification of balance tolerances*

ISO 2041:1990, *Vibration and shock — Vocabulary*

ISO 2631-1, *Mechanical vibration and shock — Evaluation of human exposure to whole-body vibration — Part 1: General requirements*

ISO 2954, *Mechanical vibration of rotating and reciprocating machinery — Requirements for instruments for measuring vibration severity*

ISO 5348:1998, *Mechanical vibration and shock — Mechanical mounting of accelerometers*

ISO 6103, *Bonded abrasive products — Permissible unbalances of grinding wheels as delivered — Static testing*

ISO 15641, *Milling cutters for high speed machining — Safety requirements*

3 Terms and definitions

For the purposes of this document, the terms and definitions given in ISO 1925, ISO 2041 and the following apply.

3.1
absolute vibration
vibration value measured with an inertial transducer at a single point

3.2
absorber
damper
device for reducing the magnitude of a shock or **vibration** by energy dissipation methods

[ISO 2041:1990, definition 2.114]

3.3
accelerance
vibration quantified by its acceleration per unit excitation force

NOTE See Table 1 in ISO 2041.

3.4
aliasing error
erroneous result in digital analysis of signals caused by having the maximum frequency of the [measured] signal greater than one-half the value of the sampling frequency

[ISO 2041:1990, definition 5.8]

3.5
amount of unbalance
product of the **unbalance mass** and the distance of its centre of mass from the shaft axis

[ISO 1925:2001, definition 3.3]

NOTE This is sometimes referred to as the “residual unbalance” (e.g. in ISO 1940-1). It is measured in mass-length units, e.g. gram millimetres (g·mm).

3.6
amplitude
peak vibration value
maximum value of a sinusoidal **vibration**

[ISO 2041:1990, definition 2.33]

© ISO 2009 – All rights reserved
Documents
Document Sharing Hub
Full document details: PD ISO/TR 230-8:2009

NOTE This is sometimes called vector amplitude to distinguish it from other senses of the term “amplitude”, and it is sometimes called single amplitude, or peak amplitude, to distinguish it from double amplitude, which, for a simple harmonic vibration, is the same as the total excursion or peak-to-peak value. The use of the terms “double amplitude” and “single amplitude” is deprecated.

3.7
angular frequency
circular frequency
product of the frequency of a sinusoidal quantity and the factor 2π

[ISO 2041:1990, definition 2.30]

NOTE 1 The unit of circular frequency is the radian per unit of time.

NOTE 2 Angular or circular frequency occurs at the rate at which any vibration signal (or part of a vibration signal) repeats its pattern. It is measured in radians/s and is usually represented by the symbol “ω”.

3.8
antinode
point, line or surface in a standing wave where some characteristic of the wave field has a maximum value

[ISO 2041:1990, definition 2.47]

EXAMPLE A point or line on the surface of a machine tool whose amplitude of vibration (at a particular frequency) is greater than that at any adjacent points or lines.

3.9
antiresonance
system in forced oscillation in which any change at a given point, however small, in the frequency of excitation causes an increase in a response at this point

NOTE 1 The above specification defines a response *minimum*, but not necessarily a response *zero*.

NOTE 2 Adapted from ISO 2041:1990, definition 2.74.

3.10
averaging
process chosen to determine a single representative value for a set of data

NOTE In connection with *sine wave analysis*, averaging refers to the arithmetic mean signal level in one half of a sine wave and is defined in Annex B. In connection with *data sampling*, various techniques are available. Vector averaging, for example, not only takes the mean of the signal level but also takes account of its phase relative to some reference frequency (e.g. the excitation frequency). This technique ensures that any signal content that is unrelated to the frequency of interest, and consequently of an undetermined phase for each sample, is rapidly diminished through cancelling as the averaging takes place. This effective enhancer of signal-to-noise ratio also provides a useful diagnostic tool for identifying vibration sources.

3.11
bandwidth
range of frequencies (usually expressed in hertz) where the amplitude exceeds a particular threshold level, or limits within which the power spectrum is considered

NOTE This should not be confused with the same term used in digital communication theory for expressing a data transmission rate in bits/s.

3.12
beats
periodic variations in the amplitude of an oscillation resulting from the combination of two oscillations of slightly different frequencies

NOTE 1 The beats occur at the difference frequency.

NOTE 2 Adapted from ISO 2041:1990, definition 2.28.

Documents
Document Sharing Hub

© ISO 2009 – All rights reserved

Full document details: PD ISO/TR 230-8:2009

3.13
broadband measurement
measuring process where the total **vibration** power is integrated over the frequency range of interest

3.14
centre of mass
that point associated with a body which has the property that an imaginary particle placed at this point with a mass equal to the mass of a given material system has a first moment with respect to any plane equal to the corresponding first moment of the system

NOTE This term is sometimes referred to as “centre of inertia” and for most practical situations it is synonymous with “centre of gravity”.

[ISO 2041:1990, definition 1.31]

3.15
chatter
self-excited regenerative relative **vibrations** between the tool and workpiece during the cutting process, precipitating an unstable machining condition

NOTE See also 5.4.

3.16
coherence function
that fraction of the total power in a response signal that is identified with an individual source component

3.17
coupled modes
modes of **vibration** that are not independent but which influence one another because of energy transfer from one to another

[ISO 2041:1990, definition 2.53]

3.18
critical damping
⟨single degree-of-freedom system⟩ amount of viscous damping that corresponds to the limiting condition between an oscillatory and a non-oscillatory transient state of free **vibration**

[ISO 2041:1990, definition 2.85]

3.19
cycle
complete range of states or values through which a periodic phenomenon or function passes before repeating itself identically

[ISO 2041:1990, definition 2.22]

3.20
damping
dissipation of energy with time

NOTE Adapted from ISO 2041:1990, definition 2.79.

3.21
damping ratio
⟨system with linear viscous damping⟩ ratio of the actual damping coefficient to the critical damping coefficient

NOTE Adapted from ISO 2041:1990, definition 2.86.

© ISO 2009 – All rights reserved
Documents
Document Sharing Hub
Full document details: PD ISO/TR 230-8:2009

3.22
degrees-of-freedom
number of degrees of freedom of a mechanical system equal to the minimum number of independent generalized coordinates required to define completely the configuration of the system at any instant of time

[ISO 2041:1990, definition 1.26]

3.23
distributed system
continuous system
system having an infinite number of possible independent configurations

[ISO 2041:1990, definition 1.29]

NOTE Machine tools generally fall into this category as the mass as well as the stiffness are not located at individual points but distributed over the whole structure.

3.24
dynamic compliance
reciprocal of **dynamic stiffness**

NOTE This is quite often referred to as “flexibility”. Typical units are µm/N.

3.25
dynamic stiffness
ratio of change of force to change of displacement under dynamic conditions

NOTE 1 See also ISO 2041:1990, definition 1.54.

NOTE 2 At low frequencies, the dynamic stiffness approximates to the static stiffness. At high frequencies, the response tends towards zero and the dynamic stiffness tends towards infinity. At intermediate frequencies, where resonances occur, the dynamic stiffness can drop to a very low value. Units of stiffness are expressed in force per displacement, e.g. N/µm.

3.26
dynamic vibration absorber
device for reducing **vibrations** of a primary system over a desired frequency range by the transfer of energy to an auxiliary system in resonance so tuned that the force exerted by the auxiliary system is opposite in phase to the force acting on the primary system

[ISO 2041:1990, definition 2.116]

NOTE Dynamic vibration absorbers may be damped or undamped, but damping is not the primary purpose.

3.27
FFT
fast Fourier transform
process where the computing times of complex multiplications and additions are greatly reduced

[ISO 2041:1990, definition 5.23]

NOTE 1 For more details, see ISO 2041:1990, A.18 to A.22.

NOTE 2 An FFT is a mathematical algorithm enabling vibration-analysis equipment to perform at high speed and thus appear to function in “real time”.

3.28
forced vibration
steady-state **vibration** caused by a steady-state excitation

[ISO 2041:1990, definition 2.16]

NOTE 1 Transient vibrations are not considered.

NOTE 2 The vibration (for linear systems) has the same frequencies as the excitation.

Documents
Document Sharing Hub

© ISO 2009 – All rights reserved

Full document details: PD ISO/TR 230-8:2009

3.29
foundation
structure that supports a mechanical system and that may be fixed in a specified frame or it may undergo a motion that provides excitation for the supported system

[ISO 2041:1990, definition 1.23]

3.30
Fourier analysis
mathematical procedure for determining the coefficients and phase angles of the components of the **Fourier series** for a given waveform

3.31
Fourier series
series which expresses the values of a periodic function in terms of discrete frequency components that are harmonically related to each other

[ISO 2041:1990, definition A.18]

NOTE See the notes to the reference in ISO 2041:1990, A.18, for a mathematical description.

3.32
free vibration
vibration that occurs after the removal of excitation or restraint

[ISO 2041:1990, definition 2.17]

NOTE The system vibrates at natural frequencies of the system.

3.33
frequency
reciprocal of the fundamental period, being the smallest increment of the independent variable of a periodic quantity [time] for which the function repeats itself

NOTE 1 Adapted from ISO 2041:1990, definitions 2.23 and 2.24.

NOTE 2 The frequency is the rate at which any vibration signal (or part of a vibration signal) repeats its pattern and is measured in hertz (Hz), which is the number of cycles per second.

3.34
frequency response
output signal expressed as a function of the **frequency** of the input signal

NOTE 1 On a machine tool the frequency response is often limited to the expression of the ratio of the relative displacement between tool and workpiece (output signal) to the excitation force (input signal). See also 4.3 *et seq*. The magnitude of the frequency response is equivalent to the dynamic compliance. The frequency response is, however, a complex quantity and requires two numbers to define it fully: either “magnitude” and “phase”, or “real part” and “imaginary part”. In some texts the term “receptance” is used synonymously with “response”.

NOTE 2 The frequency response is usually given graphically by curves showing the relationship of the output signal and, where applicable, phase shift or phase angle as a function of frequency.

NOTE 3 Adapted from ISO 2041:1990, definition B.13.

3.35
fundamental frequency
⟨periodic quantity⟩ reciprocal of the fundamental period

[ISO 2041:1990, definition 2.25]

© ISO 2009 – All rights reserved
Documents
Document Sharing Hub
Full document details: PD ISO/TR 230-8:2009

3.36
harmonic
⟨periodic quantity⟩ sinusoid, the **frequency** of which is an integral multiple of the **fundamental frequency**

[ISO 2041:1990, definition 2.26]

NOTE 1 The term "overtone" has frequently been used in place of "harmonic", the nth harmonic being called the $(n\text{-}1)^{th}$ overtone.

NOTE 2 In English, the first overtone and the second harmonic are each twice the frequency of the fundamental. In French, the distinction between harmonic and overtone does not exist, and the second harmonic is twice the frequency of the fundamental. The term "overtone" is now deprecated to reduce ambiguity in the numbering of the components of a periodic quantity.

3.37
harmonic distortion
⟨periodic wave⟩ amount of vibrational energy existing at second and subsequent harmonic frequencies compared with the total vibrational energy present

3.38
imaginary part
that part of the displacement frequency response that is in quadrature (90° out-of-phase) with the excitation

NOTE For a simple vibration system, the imaginary part reaches a maximum at the undamped natural frequency.

3.39
impulse
integral with respect to time of a force taken over the time during which the force is applied, which, for a constant force, is the product of the force and the time during which the force is applied

[ISO 2041:1990, definition 3.6]

NOTE The "impulsive" force may act over a very short time and change rapidly during the event, often reaching a very high instantaneous value. Typical examples are a hammer blow or a rapidly accelerating machine slide. Impulses are measured in units of force multiplied by time, e.g. N·s.

3.40
inertial cross-talk
displacements perpendicular to the intended direction of motion owing to a lateral offset between the driving force and the centre of mass, which lead to tilt motions during acceleration and deceleration

3.41
instrumented hammer
hammer incorporating a force transducer that is capable of transmitting a broadband frequency response of the impact delivered by the hammer when used to strike a structure

3.42
linear system
system in which the response is proportional to the magnitude of the excitation

[ISO 2041:1990, definition 1.21]

3.43
mass eccentricity
distance between the centre of mass of a rigid rotor and the shaft axis

[ISO 1925:2001, definition 2.11]

© ISO 2009 – All rights reserved

Documents
Document Sharing Hub
Full document details: PD ISO/TR 230-8:2009

3.44
mobility
complex ratio of the velocity, taken at a point in a mechanical system, to the force taken at the same or another point in the system, during simple harmonic motion

[ISO 2041:1990, definition 1.50]

3.45
modal mass
equivalent mass in a single degree-of-freedom system for a particular mode

3.46
mode of vibration
⟨system undergoing vibration⟩ mode of vibration designates the characteristic pattern of nodes and antinodes assumed by the system in which the motion of every particle, for a particular frequency, is simple harmonic (for linear systems) or has corresponding decay patterns

[ISO 2041:1990, definition 2.48]

NOTE In a machine tool, individual modes of vibration are characterized by the different relative movements of the basic structural elements. For a particular frequency at any point in time, the instantaneous disposition of these elements will determine the characteristic modal shape for that frequency.

3.47
modulation, amplitude and **frequency**
periodic wave whose amplitude and/or frequency is itself varying as a result of an imposed signal. Modulated signals are characterized by the presence of side-band frequencies

3.48
multi-degree-of-freedom system
system for which two or more co-ordinates are required to define completely the configuration of the system at any instant

[ISO 2041:1990, definition 1.28]

3.49
narrow-band measurement
measuring process where the **vibration** power over a specified narrow bandwidth of frequencies is measured

3.50
natural frequency
frequency of the free **vibration** of a damped linear system

[ISO 2041:1990, definition 2.81]

EXAMPLE The frequency at which a structure will vibrate freely when all forced vibration is removed, which in practice is the damped natural frequency. (The undamped natural frequency occurs when the phase shift is 90°.)

3.51
node
point, line or surface in a standing wave where some characteristic of the wave field has essentially zero amplitude

EXAMPLE A point or line of little or minimal movement between two parts of the machine, which, at any given instant, are moving in opposite directions.

[ISO 2041:1990, definition 2.46]

© ISO 2009 – All rights reserved
Documents
Document Sharing Hub
Full document details: PD ISO/TR 230-8:2009

3.52
non-linearity
property of a system in which the response is specifically not proportional to the magnitude of the excitation.

NOTE Systems with non-linear stiffness are usually identified either as “stiffening” or “softening”.

3.53
oscillation
variation, usually with time, of the magnitude of a quantity with respect to a specified reference when the magnitude is alternately greater and smaller than some mean value

[ISO 2041:1990, definition 1.8]

3.54
peak-to-peak vibration value
algebraic difference between the extreme values of the **vibration**

[ISO 2041:1990, definition 2.35]

EXAMPLE The total “displacement” movement of the vibration.

NOTE This is twice the amplitude and is sometimes also referred to as “double amplitude”. This term is non-preferred and loses its relevance for velocity and acceleration vibration signals.

3.55
period
fundamental period
smallest increment of the independent variable of a periodic quantity for which the function repeats itself

[ISO 2041:1990, definition 2.23]

3.56
periodic force
periodic motion
periodic quantity, the values of which recur for certain equal increments of the independent variable (time)

[ISO 2041:1990, definition 2.2]

EXAMPLE Exciting force or motion that repeats its wave pattern at a regular rate.

NOTE The waveform is not necessarily sinusoidal; the force or motion is characterized by its frequency components.

3.57
phase
phase angle
fractional part of a period through which a sinusoidal **vibration** has advanced as measured from a value of the independent variable as a reference

[ISO 2041:1990, definition 2.31]

EXAMPLE The angular delay between two otherwise similar vibration signals.

NOTE This delay is either measured in degrees in terms of the vibration period (which is counted as 360°) or in radians. Thus, two vibrations moving in opposite directions to each other at the same instant are 180° or π radians out of phase.

3.58
power spectrum
spectrum of mean-squared spectral density values

[ISO 2041:1990, definition 5.2]

© ISO 2009 – All rights reserved

Documents
Document Sharing Hub
Full document details: PD ISO/TR 230-8:2009

3.59
Q
Q **factor**
quantity which is a measure of the sharpness of resonance of a resonant oscillatory system having a single degree of freedom

NOTE 1 The Q factor is sometimes referred to as the magnification factor. It is equal to one half of the reciprocal of the damping ratio. See also 4.3.3 and Equation (19).

NOTE 2 Adapted from ISO 2041:1990, definition 2.89.

3.60
real part
that part of the displacement frequency response that is in phase with the excitation

NOTE For a simple vibration system, the real part reaches a maximum positive value just before resonance and a maximum negative value just after resonance. At the undamped natural frequency, it is zero. For some types of machine, the size of the maximum negative value provides a measure of the machine's potential instability at that frequency.

3.61
regenerative vibration
vibration that is sustained through resonance and draws its energy through feedback from an ongoing process

EXAMPLE Machine tool chatter.

3.62
relative vibration
vibration value measured between two locations (e.g. tool and workpiece) using a suitable transducer attached through a movable member to both locations

3.63
resonance
⟨system in forced oscillation⟩ any change, however small, in the frequency of excitation causing a decrease in a response of the system

[ISO 2041:1990, definition 2.72]

NOTE The condition of resonance exists when the frequency of forced vibration is close to the natural frequency (q.v.) of the structure.

3.64
resonance frequency
frequency at which resonance exists

[ISO 2041:1990, definition 2.73]

NOTE 1 For more information, see 4.3; for extended definitions, see also ISO 2041:1990, 2.73, Notes 2 and 3, and Table 2.

NOTE 2 The term "resonant frequency" is often used as a popular but syntactically imprecise alternative to "resonance frequency".

3.65
rms value
root-mean-square value
⟨single-valued function⟩ square root of the average of the squared values of the function over a (given) interval

[ISO 2041:1990, definition A.37]

NOTE This is a way of mathematically averaging the power of a vibration signal and is often used when the waveform of the signal departs from the sinusoidal waveform. See also Annex B.

© ISO 2009 – All rights reserved
Documents
Document Sharing Hub
Full document details: PD ISO/TR 230-8:2009

3.66
sampling
obtaining the values of a function for regularly or irregularly spaced distinct values from its domain

[ISO 2041:1990, definition 5.14]

3.67
sampling frequency
number of samples taken in one second

[ISO 2041:1990, definition 5.15]

3.68
sampling interval
time interval between two samples

[ISO 2041:1990, definition 5.16]

3.69
signal
vibration signal
disturbance variation of a physical quantity used to convey information

[ISO 2041:1990, definition B.1]

EXAMPLE A varying electrical voltage obtained as an analogue of mechanical vibration by means of a transducer. The voltage can be proportional to the displacement, velocity or acceleration of a mechanical vibration or the instantaneous force level, according to the type of transducer used and any subsequent processing.

3.70
simple harmonic vibration, sinusoidal vibration
periodic **vibration** that is a sinusoidal function of the independent variable

[ISO 2041:1990, definition 2.3]

NOTE A periodic vibration consisting of the sum of more than one sinusoid, each having a frequency that is a multiple of the fundamental frequency, is often referred to as a complex vibration or a multi-sinusoidal vibration.

3.71
single-degree-of-freedom system
system requiring but one co-ordinate to define completely its configuration at any instant

[ISO 2041:1990, definition 1.27]

EXAMPLE An idealized basic vibration system comprising a single mass, spring and damper.

NOTE The representation of such a system is shown in Figure 2 and its response characteristic is shown in Figure 4.

3.72
spectrum
description of a quantity as a function of frequency or wavelength

[ISO 2041:1990, definition 1.56]

3.73
standing wave
periodic wave having a fixed amplitude distribution in space, i.e. the result of interference of progressive waves of the same frequency and kind

[ISO 2041:1990, definition 2.66]

Documents
Document Sharing Hub

© ISO 2009 – All rights reserved

Full document details: PD ISO/TR 230-8:2009

NOTE 1 A standing wave can be considered to be the result of the superposition of opposing progressive waves of the same frequency and kind.

NOTE 2 Standing waves are characterized by nodes and antinodes that are fixed in position.

3.74
steady-state vibration
steady-state **vibration** exists if the vibration is a continuing periodic vibration

[ISO 2041:1990, definition 2.14]

3.75
transducer
device designed to receive energy from one system and supply energy, of either the same or of a different kind, to another in such a manner that the desired characteristics of the input energy appear at the output

[ISO 2041:1990, definition 4.1]

NOTE A transducer produces an electrical signal analogous to the displacement, velocity or acceleration characteristic of the vibration to be measured.

3.76
transfer function
mathematical relation between the output (or response) and the input (or excitation) of the system

[ISO 2041:1990, definition 1.37]

NOTE It is usually given as a function of frequency and is usually a complex function.

3.77
transient vibration
vibratory motion of a system other than steady-state or random

[ISO 2041:1990, definition 2.15]

3.78
transmissibility
non-dimensional ratio of the response amplitude of a system in steady-state forced **vibration** to the excitation amplitude. The ratio may be one of forces, displacements, velocities or accelerations

[ISO 2041:1990, definition 1.18]

3.79
unbalance
condition that exists in a rotor when **vibration** force or motion is imparted to its bearings as a result of centrifugal forces

[ISO 1925:2001, definition 3.1]

NOTE 1 The geometrical condition of a rotating element occurring when the centre of mass is eccentric to the centre of rotation. This generates a forced vibration proportional to the amount of the unbalance and to the square of the rotational velocity.

NOTE 2 See also ISO 1940-1.

3.80
unbalance mass
mass whose centre is at distance from the shaft axis

[ISO 1925:2001, definition 3.2]

© ISO 2009 – All rights reserved
Documents
Document Sharing Hub
Full document details: PD ISO/TR 230-8:2009

3.81
vibration
variation with time of the magnitude of a quantity which is descriptive of the motion or position of a mechanical system, when the magnitude is alternately greater and smaller than some average value or reference

[ISO 2041:1990, definition 2.1]

EXAMPLE The periodic relative motion between tool and workpiece caused by a mechanical disturbance. At any instant this motion can be quantified by measurements of displacement, velocity or acceleration. The steady-state magnitude of the vibration can be defined as either the maximum or the rms value of any of these quantities. It can additionally be characterized by its frequency.

NOTE 1 In vibration terminology, the term “level”, i.e. vibration level, may sometimes be used to denote amplitude, average value, rms value, or ratios of these values. These uses are deprecated.

NOTE 2 For the precise use of the term “level” in the logarithmic sense, see ISO 2041:1990, 1.57.

NOTE 3 See also Table A.1.

3.82
viscous damping
linear viscous damping
dissipation of energy that occurs when an element or part of a **vibration** system is resisted by a force the magnitude of which is proportional to the velocity of the element and the direction of which is opposite to the direction of the velocity

[ISO 2041:1990, definition 2.82]

3.83
waveform
characteristic shape of one period of the **vibration** signal

NOTE A sinusoidal vibration (like a sine wave) is characterized by a single frequency. All other repeating wave patterns contain a mixture of harmonics or integral multiples of the underlying or “fundamental” frequency.

4 Theoretical background to the dynamic behaviour of machine tools

This clause presents the fundamentals of vibration theory relevant to machine tool dynamics. Not intended for the expert, a simplified account is offered where many concepts are explained with only minimal recourse to detailed mathematics. The aim is to equip the practical engineer with sufficient information to be able to understand and evaluate vibration problems, and to carry out the basic tests described in Clauses 7 and 8. Where it is necessary to explore more technically difficult aspects of this subject, including mathematical formulae, the relevant material is presented in a series of separate “Technical Boxes”. These may be safely skipped over by the user requiring simply a general overview. In some cases, it is possible to touch on certain topics only quite briefly. Interested readers should pursue these topics further through the references in the Bibliography.

NOTE A brief summary of the essential content of this clause is presented in Annex C.

4.1 Nature of vibration: basic concepts

Vibration is a physical oscillation of a machine structure brought about by a dynamic excitation force reacting with the machine’s physical properties of mass, stiffness and damping (see 3.81).

© ISO 2009 – All rights reserved

Documents
Document Sharing Hub
Full document details: PD ISO/TR 230-8:2009

4.1.1 Displacement, velocity and acceleration of simple harmonic motion (SHM)

At its simplest, the oscillation is in the form of a time-varying sine wave, also known as simple harmonic motion (SHM). The movement is characterized by continuously varying instantaneous values for *displacement*, *velocity* and *acceleration*, each of which follows a sinusoidal waveform — see Figure 1. A harmonic vibration can be evaluated by measuring the maximum root mean square (rms)[2)], or the instantaneous values of any of these quantities. Unless otherwise specified, a value for displacement, velocity or acceleration is generally taken to mean the *maximum* value (or amplitude) within a cycle or the static value.

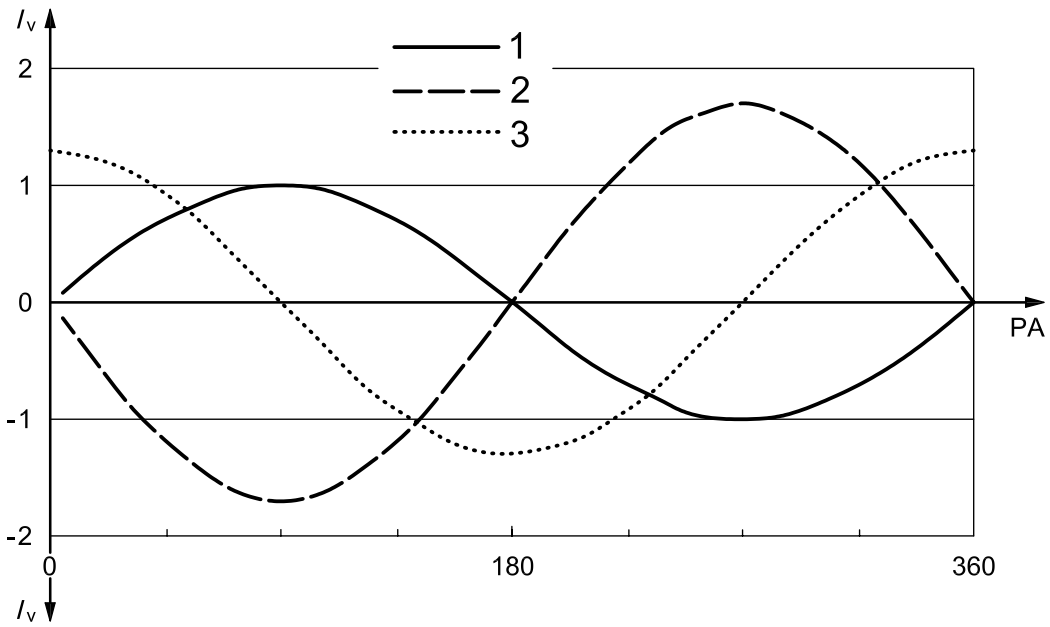

Key

PA time delay expressed as phase angle, in degrees

I_v instantaneous value of waveforms (arbitrary units)

1 displacement

2 acceleration

3 velocity

Figure 1 — Relative phase angles of displacement, velocity and acceleration for simple harmonic motion

The abscissa of Figure 1 shows the time delay, t_{del}, in terms of a fraction of the periodic or cycle time, T. It is shown here as a phase angle, in degrees, emphasizing the trigonometric provenance of the wave function, with 360° representing a full cycle or period and the phase angle = $360 \times t_{del}/T$. It is important to understand the relative phase and time delay relationships that exist between the waves representing acceleration, velocity and displacement. From the Figure 1 it can be seen that velocity "leads" the displacement by a quarter of a period or 90°, and acceleration leads by a further quarter of a period, that is, with a "phase angle" of 180° with respect to the displacement.

The relative *amplitudes* of these quantities are mathematically related, but not necessarily as shown in Figure 1 because the relationships depend on the particular vibration frequency.

2) The rms value should not be confused with the mean value, which is essentially zero over a complete cycle.

© ISO 2009 – All rights reserved
Documents
Document Sharing Hub
Full document details: PD ISO/TR 230-8:2009

4.1.2 Frequency

Frequency, f, is the reciprocal of the period, T, of the waveform in seconds for one cycle, corresponding to a "phase angle" of 360° in Figure 1. Frequency, expressed in s^{-1}, is measured in hertz (Hz), where 1 Hz = 1 cycle per second, although in many formulae it is more convenient to replace the frequency in Hz by the circular frequency (or "pulsatance"[3]) in radians/s. [Note that f is usually used for a frequency in Hz, and ω for a (circular) frequency in rad/s, where $f = \omega/2\pi$ rad/s.] For a constant displacement amplitude, the velocity increases with frequency, and the acceleration increases further with the square of the frequency — see Equations (1), (2) and (3). (See also Annex B for further information on this topic.)

The *instantaneous* displacement, velocity, and acceleration of SHM are related as follows:

displacement $= x = x_0 \times \sin \omega t$ ... (1)

velocity $= \dot{x} = \dfrac{dx}{dt} = x_0 \omega \times \cos \omega t$ ... (2)

acceleration $= \ddot{x} = \dfrac{d^2x}{dt^2} = -x_0 \omega^2 \times \sin \omega t$ ... (3)

where

x_0 driving displacement amplitude;

ω circular frequency;

t time.

Technical Box 1 — Formulae for absolute values of displacement, velocity and acceleration for simple harmonic motion

4.1.3 Excitation; transfer functions

Excitation of vibration can either arise kinematically from the essential mechanisms required for the functioning of the machine, or be generated through the cutting process (interaction between tool and workpiece), or else be transmitted through the floor from some external source. And further, for the specific purpose of testing the machine, it can be supplied by an artificial exciter. The various types of vibration source likely to be encountered on a machine tool are discussed in Clause 5, while artificial excitation is covered in Clause 8. In each case, vibration is initiated through an oscillating force, F. However, the waveform of this force will not necessarily conform to the idealized simple harmonic motion described in 4.1.1 and shown in Figure 1. It could take the form of an "impulse", a "step function" or a complex combination of any of these — and, in a special case, it might even be a non-varying (i.e. "static") force.

The relationship between the resulting vibration (displacement amplitude, x) and the input force, F, (with respect to frequency) is generally known as a transfer function of the system, and is often denoted by the symbol G, where $G = x/F$. There can be a number of separate transfer functions determined by which inputs and outputs are being compared.

4.1.4 Energy and momentum

It should be borne in mind that any vibrating mechanical system will have associated with it both energy and momentum, whose universal conservation is enshrined in the basic laws of mechanics.

3) Non-preferred term.

© ISO 2009 – All rights reserved

Documents
Document Sharing Hub
Full document details: PD ISO/TR 230-8:2009

"Conservation of momentum" means that a vibrating system always has an equal and opposite momentum to the surface it is sitting on, or the frame it is attached to: it *cannot* vibrate in isolation. A small mass (e.g. a machine) vibrating with a large displacement amplitude (and hence a high velocity) can sit on a large mass (e.g. a floor) with a small displacement (and hence a small velocity). Nevertheless, the two momenta must always balance: they are always equal and opposite. Remember that momentum is the product of mass times velocity, which, for vibrating systems, is proportional to mass times displacement times frequency.

Conservation of energy has similar implications, though energy can be converted into other forms. During each cycle, kinetic energy (maximum at mid-travel) is continually being transformed to potential energy (maximum at ends of travel) and vice versa. A freely vibrating system that is slowing down through damping (i.e. friction) gradually dissipates its kinetic energy into heat energy (i.e. molecular movement). In the case of forced vibration, the "lost" energy is continuously being replaced and it is therefore more appropriate to consider the *power* of the vibrating system, i.e. the rate at which energy is being delivered.

4.2 Single-degree-of-freedom systems

The study of machine tool dynamics requires the understanding of some fundamental notions, which can be best illustrated by considering a single-degree-of-freedom system.

4.2.1 The single-degree model

Such a system is shown in Figure 2, and comprises a mass (m) supported by a spring (k) and damper (c). It is called a single-degree system simply because it can vibrate in only one way (i.e. up and down in the figure), and mathematically it has only one independent variable: the displacement (x) of the mass. [The velocity ($\dot{x}$) and the acceleration ($\ddot{x}$) are derivatives of the displacement (see Technical Box 1) and are not therefore independent.]

In Figure 2, an excitation force (see 4.1.3) is shown being applied to this model through the top (i.e. via the mass). The system's response to this excitation force (F) is the displacement (x) of the mass.

The following properties are assigned to the "idealized" components of this model.

The "massless" spring is resistant only to displacement, x, either in tension or compression, and opposes the applied force by virtue of its stiffness (k). When the spring is at its peak[4)] displacement downwards (i.e. its maximum compression), it reacts with a force, $K = -kx$, upwards — see Equation (7). Because the spring displacement is directly proportional to the applied force, this ensures that the model conforms to a linear system.

The mass (m), is resistant only to acceleration and opposes the applied force by virtue of its inertia — Equation (5). Peak acceleration upwards occurs at the bottom of the stroke (see Figure 2), where it reacts with its peak inertia force (M) *downwards*. Acceleration, and hence the inertia force (M), will increase from zero with the square of the frequency. [See Equation (3).]

The damper, with damping coefficient (c), possesses viscous damping and is resistant only to velocity; it opposes the applied force by virtue of its viscosity. Peak velocity occurs at the midpoint of the travel where the damper reacts with its peak damping force (C) — Equation (6). This force will therefore be 90° ahead of the peak displacement and increase directly with the frequency. (A *viscous* damper has been used in the model because it is the simplest to deal with. It also contributes to the linear system because its reaction force is directly proportional to velocity.) Subclause 4.7.4 discusses other types of damping.

4) In this context, the term "peak" defines the maximum value within a cycle at a particular frequency, i.e. its "displacement amplitude".

© ISO 2009 – All rights reserved
Documents
Document Sharing Hub
Full document details: PD ISO/TR 230-8:2009

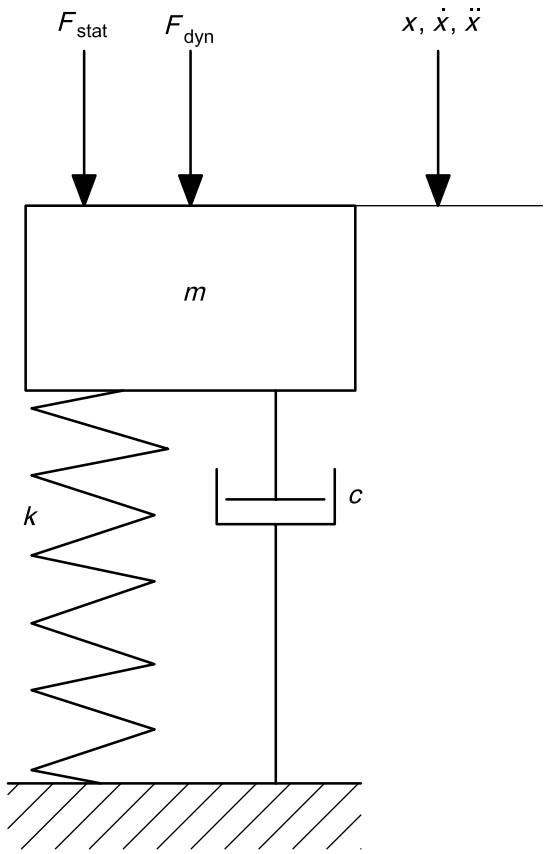

Key

F_{dyn} excitation force
F_{stat} static preload
x response
m mass
k spring
c damper

Figure 2 — Basic single-degree-of-freedom system

For simple harmonic excitation, the instantaneous value, F, of the exciting force is given by

$$F = F_0 \sin \omega t \quad \text{... (4)}$$

where F_0 is the dynamic driving force amplitude, and ω is the circular frequency in rad/s.

The reaction forces developed by the components of the single-degree model are:

inertia force: $M = -m\ddot{x}$ ... (5)
damping force: $C = -c\dot{x}$ ... (6)
spring force: $K = -kx$ ... (7)

Technical Box 2 — Formulae for excitation and reaction forces

Consider first the fairly trivial case of the application of a static force (F_0). The displacement (x) of the mass is in the same direction as the applied force and is balanced by the elastic restoring force of the spring (kx). There is, of course, no velocity or acceleration. The transfer function of this static system is simply the “static compliance” (x/F) of the spring, which is the reciprocal of its “static stiffness”.

© ISO 2009 – All rights reserved

Documents
Document Sharing Hub
Full document details: PD ISO/TR 230-8:2009

Now consider the application of a simple harmonic exciting force (F) with a controllable frequency applied to the mass as shown. After the initial disturbance has settled down (see 4.5.5), the system will exhibit a steady-state vibration condition where it generates an equal and opposite reaction force to the applied excitation force — see Equation (4). This introduces the concept of dynamic stiffness.

4.2.2 Dynamic stiffness

The static stiffness of a structure is defined as the ratio of an applied (static) force, F_0, to the resultant displacement. In a similar way, the dynamic stiffness can be defined as the ratio of the exciting force amplitude, F, to the vibration displacement amplitude, (x). The dynamic stiffness varies with frequency: at low frequencies, it is close to the static stiffness with a similar displacement; at very high frequencies, the dynamic stiffness is also very high but with very little displacement because the mass simply cannot follow the oscillation of the force. Between these two extremes, the dynamic stiffness can reach quite low minima and allow unacceptably large displacement amplitudes to build up. Such stiffness minima are known as "resonances" and will be examined shortly. The overall variation of dynamic stiffness[5)] with frequency can be represented in a number of ways, some of which will now be examined.

4.2.3 Vector representation and physical interpretation

The view of the waveform presented in Figure 1 is called a "time domain" view (because the horizontal axis represents time). However, this view does not help much in interpreting how the system behaves at different frequencies. One way of doing this is to examine the force vectors generated on the model shown in Figure 2. With the exciting force held constant, the resultant displacement amplitude is indicative of the dynamic compliance, i.e. the reciprocal of dynamic stiffness. (Conversely, if the magnitude of the exciting force were to be continually adjusted to maintain a *constant displacement amplitude,* then the force level applied would be indicative of the dynamic stiffness.)

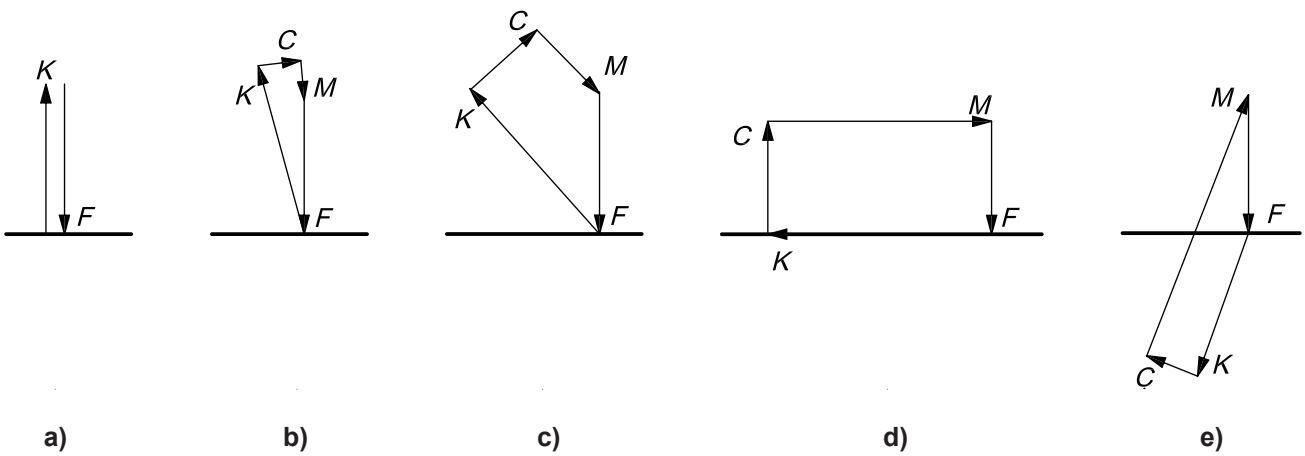

Figure 3 — Vector diagrams for the inertia, spring and damping forces in phase space with reference to the driving force

In a series of vector diagrams, Figure 3 shows how the reactive forces of inertia (M), elasticity (K) and damping (C) develop with a progressively increasing frequency of the exciting force (F). The exciting force is constant in magnitude and always balances the resultant reactive force vector by completing the force polygon. In each of these diagrams, F is shown pointing downwards. This is an arbitrary convention representing only one particular instant in the cycle. (All vectors should be envisaged as rotating at a rate of ω rad/s, so that half a cycle later, this vector would be pointing upwards.)

5) The use of the term "dynamic stiffness" without a qualifying frequency is usually taken to mean the *minimum* dynamic stiffness, i.e. at resonance.

© ISO 2009 – All rights reserved
Documents
Document Sharing Hub
Full document details: PD ISO/TR 230-8:2009

The force vectors M, K, C and F thus represent maximum (i.e. "amplitude") values whose *phase* relationship to each other in time is represented by the *geometric* angle between them shown in the diagrams. It should be clearly understood that these vectors are representations in "phase space" and should not be thought of as existing in normal "geometric space". *Real* forces, as opposed to vectors, do not point in a single direction: they are bidirectional, being either compressive or tensile.

Figure 3 a) shows the static load condition (discussed in 4.2.1) with the spring force vector, K (up), balancing the applied force vector, F (down). This is also the general situation for low frequencies, where the dynamic compliance is essentially the same as the static compliance. The vibration displacement amplitude is proportional to the exciting force, and the mass consequently moves back and forth in phase with the force. Remember that, in each case, the displacement (x) of the mass is always in the opposite direction to the spring vector force, K.

Figure 3 b) shows that, with the frequency increased a little, the vectors K and M begin to grow but, acting in opposite directions, they tend to cancel one another in opposing the applied force vector, F. The increasing damping force, C, at 90° to the spring force, introduces a phase angle difference between the vectors of the spring force, K, and the applied force, F.

Figure 3 c) shows that, as the frequency is raised, further increases in the component vectors occur, matching the increases in M and C. Notice that as C grows so does the phase angle between K and F (in the counter-clockwise direction) indicating that a time lag is growing between the excitation force, F, and the resulting displacement. Notice too that the relative phase angles between M, K and C do not change.

Figure 3 d) shows the point reached where the inertia force, M, is large enough to cancel out the stiffness force, K, entirely. Here, F is opposed only by the damping force, C, and, when this is low, the displacement amplitude may reach very high values[6]. Without the damping force present, F would no longer be required and the dynamic stiffness would thus become zero. Once disturbed, such a system would theoretically continue to oscillate by itself indefinitely. The frequency at which this occurs is a concept central to vibration theory and is known as the natural frequency (strictly, the *undamped* natural frequency). It is dependent only on the ratio of the spring constant to the mass — see Equation (10). The term resonance strictly refers to the frequency of maximum compliance, which is very slightly less than the natural frequency (see 4.3.3). In practice, of course, damping can never be truly zero.

On machine tools structures, where damping is usually quite low, the dynamic compliance at resonance can be many times higher than the static compliance and can consequently give rise to large troublesome amplitudes of vibration.

Figure 3 e) shows the condition above resonance where the high frequency of the applied force vector, F, has caused the other vectors to swing right round (in the phase plane). As the frequency increases still further, the phase angle begins to approach 180°. Because of this, F is now mainly opposed by M with the result that the displacement amplitude reduces and, consequently, so do M, K and C. Ultimately, at very high frequencies, virtually all movement ceases, with K and C reduced almost to zero, and with M balancing F at 180°.

NOTE With *zero* damping, K would always point straight up for Figure 3 a) to c) and straight down for Figure 3 e). For Figure 3 d), it is not defined.

The response behaviour can be summed up quite simply. For frequencies well below resonance, the motion is controlled by the stiffness of the system. Around resonance it is limited by the damping, and well above resonance it is limited by the mass inertia.

The magnitude and direction of the spring force vector, K, thus shows how the dynamic compliance[7] of the system varies as the frequency changes. The pictorial representation of vectors given in Figure 3 can be developed further into a formal graphical presentation in the phase plane, as shown in 4.4.4.

---

6) Strictly, when damping is present, the maximum value does not coincide precisely with the natural frequency — see 4.3.3.

7) The term "flexibility" is often used synonymously with "compliance".

Documents
Document Sharing Hub

© ISO 2009 – All rights reserved

Full document details: PD ISO/TR 230-8:2009

4.3 Mathematical considerations

4.3.1 Equations of motion; dimensionless quantities

Equations describing the motion of the system are presented in Technical Boxes 3 and 4. Technical Box 3 illustrates the particular situation when no forced vibration is present, but where the mass is subjected to an initial disturbance at time "zero" and then released. From this are derived the formulae for the natural frequencies, both damped and undamped.

The equation of motion for the single-degree system shown in Figure 2 *without* forced excitation is given by:

$$m\ddot{x} + c\dot{x} + kx = 0 \quad \text{... (8)}$$

for a mass, m, damping coefficient, c, and stiffness, k. The solution to this is given by:

$$\omega_\mathrm{d} = \sqrt{\frac{k}{m} - \left(\frac{c}{2m}\right)^2} \quad \text{damped natural frequency of the free system} \quad \text{... (9)}$$

For zero damping, this reduces to:

$$\omega_n = \sqrt{\frac{k}{m}} \quad \text{(undamped) natural frequency} \quad \text{... (10)}$$

The amount of damping required to just prevent oscillation is given by c_c, the critical damping, whence the "damping ratio" (i.e. actual/critical damping), which is found to be a very convenient unit in which to express the solutions to the equations of motions.

$$c_\mathrm{c} = 2\sqrt{mk}$$

$$\therefore c_\mathrm{c} = 2m\omega_\mathrm{n}$$

$$\zeta = \frac{c}{c_\mathrm{c}} = \frac{c}{2m\omega_\mathrm{n}} \quad \text{damping ratio} \quad \text{... (11)}$$

$$\therefore \omega_\mathrm{d} = \omega_\mathrm{n}\sqrt{1-\zeta^2} \quad \text{damped natural frequency of the free system} \quad \text{... (12)}$$

Technical Box 3 — Formulae for natural vibrations

The equations of motion for the system are derived by equating the excitation force with the reaction forces of the components shown in Technical Box 2. The equations and their solutions are shown in Technical Box 4. The transfer function for the forced single-degree system is embodied in Equations (14), (15) and (16).

The analysis of vibration and, in particular, its graphical representation are facilitated by using "dimensionless quantities" or ratios. Such quantities are always independent of the physical measuring units used. One particularly useful dimensionless quantity is the damping ratio, ζ ("zeta"). This expresses the ratio of the actual amount of damping present to the critical damping, which is the amount of damping required just to prevent free vibrations from occurring. The damping ratio is defined in Equation (11). Damping ratios for machine tool structures are typically in the range 0,01 to 0,1.

In a similar way, the specific dynamic compliance (shown in units of displacement/force, in mm/N) can conveniently be replaced by the dimensionless quantity dynamic magnification (or "amplitude ratio") in terms of the static response. The dynamic magnification thus compares the displacement amplitude at any frequency with the static displacement. Similarly, it is often more convenient to use for the abscissa scale the frequency ratio, η, in terms of the natural frequency, ω_n, or to represent other theoretically derived frequencies in terms of ω_n, as in Equation (12). Note that the dynamic magnification ratio occurring at resonance is sometimes expressed as the dimensionless Q factor (or simply, "Q" where Q = 1/2 ζ) or the dynamic gain — see Technical Box 4.

© ISO 2009 – All rights reserved
Documents
Document Sharing Hub
Full document details: PD ISO/TR 230-8:2009

The equation of motion for the harmonically forced single-degree system is:

$$m\ddot{x} + c\dot{x} + kx = F_0 \sin \omega t \quad \text{... (13)}$$

for an excitation force of amplitude, F_0, and circular forcing frequency, ω, in rad/s. The reactive forces of the system on the left balance the exciting force on the right.

This is a "classic" second-order differential equation whose solution is given by the sum of the "Complementary Function" representing the initial transient and the "Particular Integral" representing the steady-state solution. The former is shown as:

$$x = e^{-\zeta \omega_n t} A(\sin \omega_n t - \varphi) \quad \text{transient response} \quad \text{... (14)}$$

and the latter shows the dynamic magnification and the resulting phase angle as a function of frequency.

$$\left|\frac{X}{X_0}\right| = \frac{1}{\sqrt{\left(1-\eta^2\right)^2 + \left(2\zeta\eta\right)^2}} \quad \text{dynamic magnification ratio} \quad \text{... (15)}$$

$$\varphi = \tan^{-1}\left(\frac{2\zeta\eta}{1-\eta^2}\right) \quad \text{phase angle} \quad \text{... (16)}$$

where

$$\eta = \frac{\omega}{\omega_n} \quad \text{frequency ratio} \quad \text{... (17)}$$

Formulae (15) and (16) represent the "transfer function" of the system.

For the transient formula, A = an arbitrary amplitude coefficient and φ = a phase angle. These values depend on the initial phase of the forced excitation at time t = 0.

For forced vibration, this becomes the resonance frequency, ω_r:

$$\omega_r = \omega_n \sqrt{1 - 2\zeta^2} \quad \text{... (18)}$$

And the maximum dynamic magnification ratio of the displacement amplitude at resonance is given by:

$$X_{res} = \frac{1}{2\zeta\sqrt{1-\zeta^2}} \quad \text{... (19)}$$

For small values of damping ratio, the dynamic multiplication factor at resonance, Q, reduces to:

$$Q = \frac{1}{2\zeta} \quad \text{... (20)}$$

Technical Box 4 — Displacement equations of motion for forced second-order single-degree system

4.3.2 Energy considerations

A contrasting mathematical procedure for studying the behaviour of vibrating models is one using the balance of energy (see also 4.1.4). For example, the frequency Equation (10) can be derived alternatively by equating the maximum kinetic energy occurring at zero elongation to the maximum potential energy occurring at the maximum elongation.

4.3.3 Natural frequencies and resonance

A clear distinction should be made between the terms "undamped natural frequency", "damped natural frequency" and "resonance frequency". For zero damping, all these frequencies are identical and occur at the 90° phase point. When damping is present (which is always the case), the damped natural frequency [Equations (9) and (12)] is the frequency at which a system will oscillate freely, i.e. without external excitation.

Documents
Document Sharing Hub

© ISO 2009 – All rights reserved

Full document details: PD ISO/TR 230-8:2009

This is always slightly lower than the (undamped) natural frequency [Equation (10)]. The resonance frequency [Equation (17)] is the maximum response (or dynamic compliance) to forced excitation and is slightly lower than the damped natural frequency. These two latter frequencies are dependent on the amount of damping present. For machine tool structures, where the damping ratio is generally less than 0,1, the differences between these three frequencies are academic and a quantitative distinction is not usually necessary. See Technical Boxes 3 and 4.

For frequencies ω_u and ω_l above and below resonance ω_n, where response drops to $1/\sqrt{2}$:

for $\eta = \dfrac{\omega}{\omega_n}$ [from (17)]

$\Delta_\eta = \eta_u - \eta_l$ bandwidth for $1/\sqrt{2}$ response

$\zeta = \Delta_\eta / 2$ ... (21)

The arrows drawn on the response in Figure 4 illustrate this concept, with the height of the arrows set at $1/\sqrt{2}$ of the peak and the measured width between them determining Δ_ω.

Technical Box 5 — Practical calculation of damping ratio

As mentioned in 4.3.1, the dynamic magnification ratio occurring at resonance can also be expressed as Q, the dynamic gain — see Equation (20). Although the damping ratio may be derived theoretically from Q by computing the dynamic and static displacement amplitudes, this method is inappropriate for complex systems.

An alternative procedure is available for conditions of low damping. The two frequencies (either side of resonance), where the response is $1/\sqrt{2}$ times that at resonance, should be measured (perhaps graphically), and the values substituted in Equation (21) in Technical Box 5 to give an acceptable estimate of the damping ratio.

The solutions to Equations (15) and (16) allow useful *graphical representations* of a dynamic system to be constructed to provide a clearer understanding of its performance at different frequencies.

4.4 Graphical representations

4.4.1 Frequency response diagrams: dynamic magnification

A plot of the dynamic magnification is shown in Figure 4. It is a manifestation of the equations of motion in the frequency domain and shows the frequency response curve, i.e. Equation (15). It is also a plot of the magnitude of vector K, as it varies with frequency in Figure 3. In this particular case, the axes represent dimensionless quantities. The vertical axis shows the dynamic magnification ratio and the horizontal axis the frequency ratio in terms of the natural frequency. Frequency response diagrams of this kind are widely used for illustrating vibration behaviour and are not limited to single-degree systems. Other examples will be encountered later in Figures 6, 10, 11, 14, 15, 16, 19, 30, and elsewhere.

In Figure 4 two frequency responses of the system are plotted: (1) with low damping (ζ = 0,075) and (2) with high damping (ζ = 0,25). "ζ" denotes the damping ratio (see 4.3.1). The value of 0,075 is quite typical for a machine tool. The higher value of 0,25 is, however, more representative of isolated damping elements, and it can be seen from this plot how significantly higher damping reduces the dynamic magnification at resonance. In Figure 4 resonance occurs close to the natural frequency, where the magnification ratio (or Q factor) is about 6,7 for (1), and 2,1 for (2). Consequently, the dynamic stiffness is 6,7 times *less* than the static stiffness. It will be seen that the frequency of maximum response (i.e. the "resonance frequency", not the "natural frequency") decreases slightly with increased damping.

© ISO 2009 – All rights reserved
Documents
Document Sharing Hub
Full document details: PD ISO/TR 230-8:2009

4.4.2 Frequency response diagrams: phase

It is clear from the vector diagrams in Figure 3 and Equation (16) that the response is not fully described by the dynamic magnification plot alone. Over the frequency range covered for the model, the phase lag between the exciting force and the *displacement* is seen to shift from zero to nearly 180° and to be precisely 90° at the natural frequency. Note that since the velocity is always 90° ahead of the displacement, the phase between the *velocity* and the exciting force will range from 90° to 270°. Similarly, the phase of the *acceleration* to the exciting force will range from 180° to 360°. (Unless otherwise qualified, however, the phase is usually taken to be that between the *displacement* and the excitation force.)

In the frequency domain, the corresponding phase response diagram is shown in Figure 5. In addition, Figures 4 and 5, taken together, provide the necessary complete description of the response.

The phase angle shown in Figure 5 is representative of the angle of the force vector, F, in traces b) to e) of Figure 3. Traces 1 and 2 correspond to the same two values of damping factor shown in Figure 4. The third trace 3 shown in Figure 5 is the (almost) undamped response. Note that all the curves cross at the natural frequency, where the phase angle is always 90° and independent of damping.

Another way of presenting the phase "information" is to use two frequency response curves representing the real and imaginary parts of the dynamic magnification.

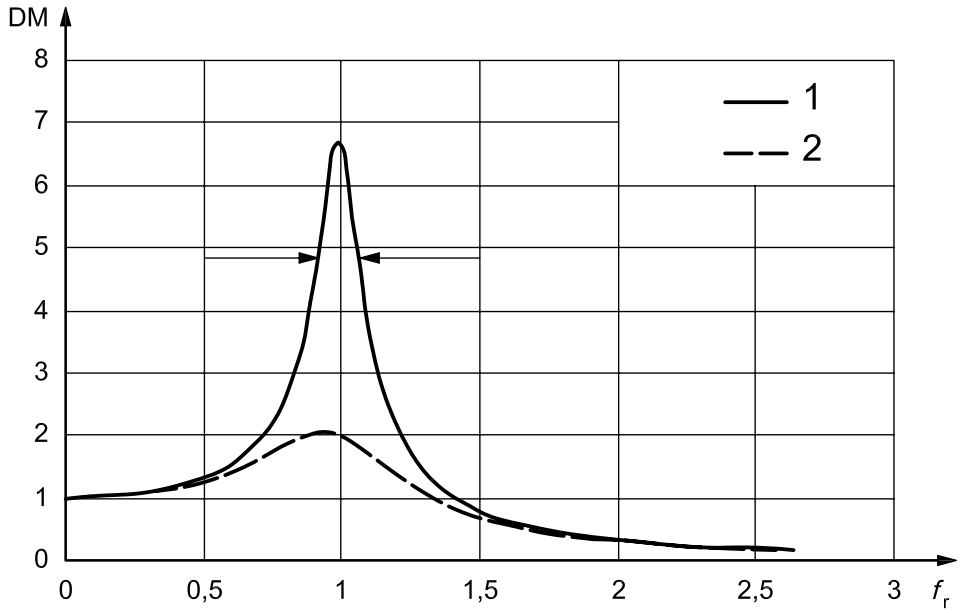

Key

f_r frequency ratio

DM dynamic magnification

1 damping ratio, $\zeta = 0{,}075$

2 damping ratio, $\zeta = 0{,}25$

The significance of the arrows is discussed in Technical Box 5.

Figure 4 — Typical single-degree-of-freedom displacement responses for two values of damping ratio

© ISO 2009 – All rights reserved

Documents
Document Sharing Hub
Full document details: PD ISO/TR 230-8:2009

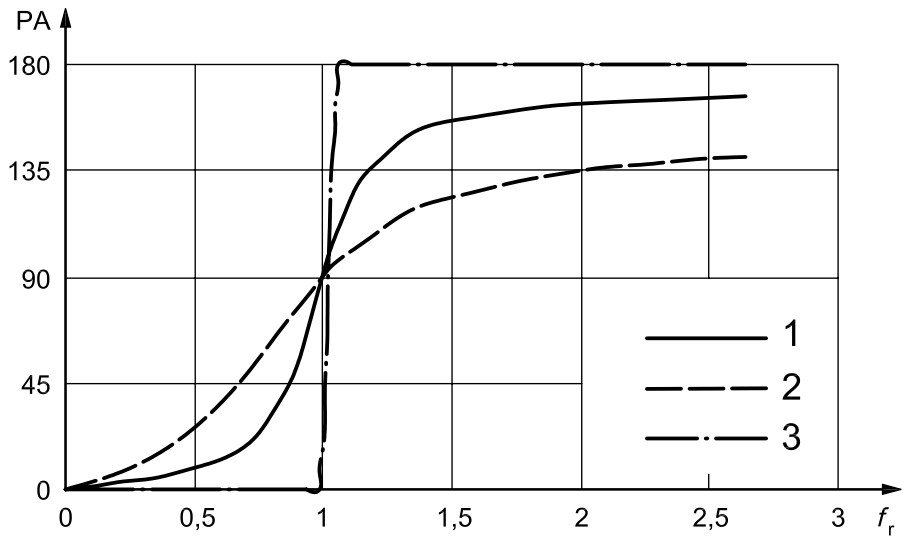

Key

f_r frequency ratio
PA phase angle (degrees)
1 damping ratio, $\zeta = 0{,}075$
2 damping ratio, $\zeta = 0{,}25$
3 damping ratio, $\zeta \sim 0$

Figure 5 — Single-degree-of-freedom phase response

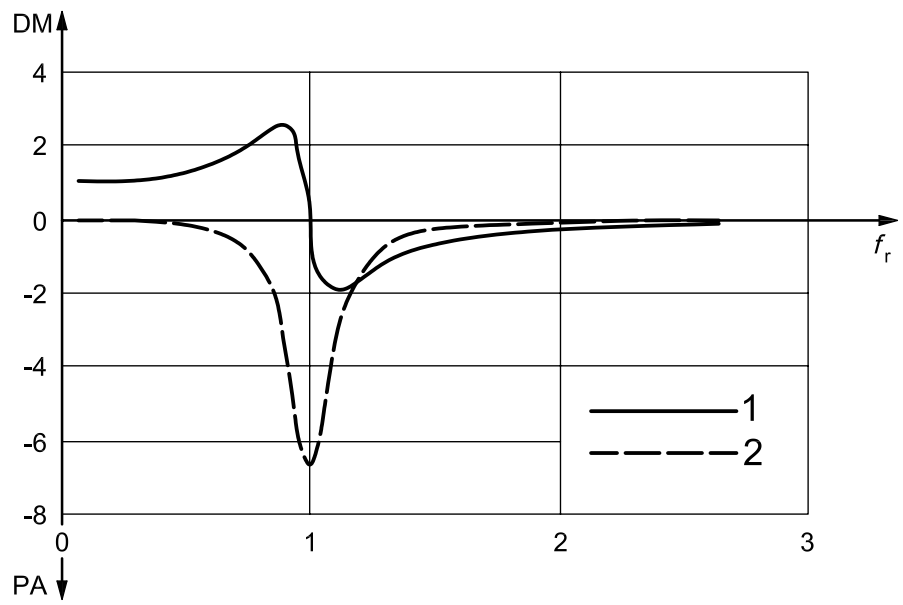

Key

f_r frequency ratio
DM magnitude of component response
1 real part
2 imaginary part (j)

Figure 6 — Real and imaginary parts of complex displacement response for $\zeta = 0{,}075$

© ISO 2009 – All rights reserved
Documents
Document Sharing Hub
Full document details: PD ISO/TR 230-8:2009