PD ISO/TR 24679-6:2017

BSI Standards Publication

Fire safety engineering — Performance of structures in fire

Part 6: Example of an eight-storey office concrete building

Documents
Document Sharing Hub

Full document details: PD ISO/TR 24679-6:2017

National foreword

This Published Document is the UK implementation of ISO/TR 24679-6:2017.

The UK participation in its preparation was entrusted to Technical Committee FSH/24, Fire safety engineering.

A list of organizations represented on this committee can be obtained on request to its secretary.

This publication does not purport to include all the necessary provisions of a contract. Users are responsible for its correct application.

© The British Standards Institution 2017
Published by BSI Standards Limited 2017

ISBN 978 0 580 90823 1

ICS 13.220.01

Compliance with a British Standard cannot confer immunity from legal obligations.

This Published Document was published under the authority of the Standards Policy and Strategy Committee on 31 December 2017.

Amendments/corrigenda issued since publication

Date	Text affected

Documents
Document Sharing Hub

Full document details: PD ISO/TR 24679-6:2017

TECHNICAL REPORT

ISO/TR 24679-6

First edition
2017-12

Fire safety engineering — Performance of structures in fire —

Part 6: Example of an eight-storey office concrete building

Ingénierie de la sécurité incendie — Performance des structures en situation d'incendie —

Partie 6: Exemple d'un immeuble de bureaux de huit étages en béton renforcé

Reference number
ISO/TR 24679-6:2017(E)

Documents
Document Sharing Hub

© ISO 2017

Full document details: PD ISO/TR 24679-6:2017

COPYRIGHT PROTECTED DOCUMENT

© ISO 2017, Published in Switzerland

All rights reserved. Unless otherwise specified, no part of this publication may be reproduced or utilized otherwise in any form or by any means, electronic or mechanical, including photocopying, or posting on the internet or an intranet, without prior written permission. Permission can be requested from either ISO at the address below or ISO's member body in the country of the requester.

ISO copyright office
Ch. de Blandonnet 8 • CP 401
CH-1214 Vernier, Geneva, Switzerland
Tel. +41 22 749 01 11
Fax +41 22 749 09 47
copyright@iso.org
www.iso.org

© ISO 2017 – All rights reserved

Documents
Document Sharing Hub

Full document details: PD ISO/TR 24679-6:2017

Contents

Page

Foreword ... **iv**

Introduction ... **v**

1 Scope ... **1**

2 Normative references ... **1**

3 Terms, definitions and symbols ... **1**
3.1 Terms and definitions ... 1
3.2 Symbols ... 2

4 Design strategy for fire safety of structure ... **3**
4.1 General design process for fire safety of structures ... 3
4.2 Guidance of practical design process for fire safety of structure ... 3

5 Qualification of the performance of structures in fire ... **3**
5.1 STEP 1: Scope of the project for fire safety of structure ... 3
5.1.1 Built-environment characteristics ... 3
5.1.2 Fuel loads ... 6
5.1.3 Mechanical actions ... 7
5.2 STEP 2: Identifying objectives, functional requirements, and performance criteria for fire safety of structure ... 8
5.3 STEP 3: Trial plan for fire safety of structure ... 10
5.4 STEP 4: Design fire scenarios and design fires ... 10
5.4.1 General ... 10
5.4.2 Design fire scenarios ... 10
5.4.3 Design fires ... 11
5.5 STEP 5: Thermal response of the structure ... 17
5.5.1 General ... 17
5.5.2 Thermal analysis of the slab ... 18
5.5.3 Thermal analysis of the beam ... 19
5.5.4 Thermal analysis of the column ... 21
5.6 STEP 6: Mechanical response of the structure ... 21
5.6.1 Structural model ... 21
5.6.2 Assumptions of the analysis ... 22
5.6.3 Structural behaviour of the building ... 24
5.7 STEP 7: Assessment against the fire safety objectives ... 34
5.8 STEP 8: Documentation of the design for fire safety of structures ... 34
5.9 STEP 9: Factors and influences to be considered in the quantification process ... 35
5.9.1 Material properties ... 35

Annex A (informative) **Heat transfer of calculation** ... **39**

Annex B (informative) **Results from thermal and mechanical analyses** ... **40**

Annex C (informative) **Results from OAT sensitivity analysis for the uncertainty of material properties** ... **44**

Bibliography ... **48**

© ISO 2017 – All rights reserved

Documents
Document Sharing Hub

Full document details: PD ISO/TR 24679-6:2017

Foreword

ISO (the International Organization for Standardization) is a worldwide federation of national standards bodies (ISO member bodies). The work of preparing International Standards is normally carried out through ISO technical committees. Each member body interested in a subject for which a technical committee has been established has the right to be represented on that committee. International organizations, governmental and non-governmental, in liaison with ISO, also take part in the work. ISO collaborates closely with the International Electrotechnical Commission (IEC) on all matters of electrotechnical standardization.

The procedures used to develop this document and those intended for its further maintenance are described in the ISO/IEC Directives, Part 1. In particular the different approval criteria needed for the different types of ISO documents should be noted. This document was drafted in accordance with the editorial rules of the ISO/IEC Directives, Part 2 (see www.iso.org/directives).

Attention is drawn to the possibility that some of the elements of this document may be the subject of patent rights. ISO shall not be held responsible for identifying any or all such patent rights. Details of any patent rights identified during the development of the document will be in the Introduction and/or on the ISO list of patent declarations received (see www.iso.org/patents).

Any trade name used in this document is information given for the convenience of users and does not constitute an endorsement.

For an explanation on the voluntary nature of standards, the meaning of ISO specific terms and expressions related to conformity assessment, as well as information about ISO's adherence to the World Trade Organization (WTO) principles in the Technical Barriers to Trade (TBT) see the following URL: www.iso.org/iso/foreword.html.

This document was prepared by Technical Committee ISO/TC 92, *Fire safety,* Subcommittee SC 4, *Fire safety engineering*.

© ISO 2017 – All rights reserved
Documents
Document Sharing Hub
Full document details: PD ISO/TR 24679-6:2017

Introduction

The work described in this document is an example of the application of ISO 24679-1. The procedure in this document is intended to follow the principles outlined in ISO 24679-1. The sections of ISO 24679-1 which are considered relevant to this example are identified and thus, the section titles are the same and appear in the same order.

The purpose of this study is to demonstrate the application of the steps outlined in ISO 24679-1 for fire safety engineering and performance of structures in fire in compliance with the related standards of France. As such, the relevant sections to this example are applied and discussed.

© ISO 2017 – All rights reserved

Documents
Document Sharing Hub
Full document details: PD ISO/TR 24679-6:2017

Fire safety engineering — Performance of structures in fire —

Part 6: Example of an eight-storey office concrete building

1 Scope

This document provides an example of fire safety engineering design in the application of ISO 24679-1 to an office building.

In this document, an overall structural analysis of a building is undertaken. It consists in a numerical assessment of the structural performance of an eight-storey concrete building when subjected to a fire. This analysis is performed in order to demonstrate that the fire safety objectives, for the relevant design fire scenarios, due to structural behaviour of building in the event of fire, are met with the trial plan for the safety of structure. With regards to this, a fully developed fire was studied.

The purpose of this document is to assess the performance of an office building which is fully accessible to public in case of fire, using ISO 24679-1. In this respect, a critical design fire was identified and analysed using detailed fire modelling. A more detailed analysis was then performed for critical design fire using the finite element model. The advanced model provided all the comprehensive information necessary for analysing the given built environment with respect to fire safety.

It is to be noted that this document only addresses the fire safety objectives related to the structural performance during fire. The analysis within this document is therefore only part of the overall building fire safety strategy.

2 Normative references

The following documents are referred to in the text in such a way that some or all of their content constitutes requirements of this document. For dated references, only the edition cited applies. For undated references, the latest edition of the referenced document (including any amendments) applies.

ISO 24679-1:—[1], *Fire safety engineering — Performance of structures in fire — Part 1: General*

3 Terms, definitions and symbols

3.1 Terms and definitions

For the purposes of this document, the terms and definitions given in ISO 24679-1 apply.

ISO and IEC maintain terminological databases for use in standardization at the following addresses:

— IEC Electropedia: available at http://www.electropedia.org/

— ISO Online browsing platform: available at http://www.iso.org/obp

1) Under preparation. Stage at the time of publication: ISO/DIS 24679-1:2017.

© ISO 2017 – All rights reserved

Documents Document Sharing Hub
Full document details: PD ISO/TR 24679-6:2017

3.2 Symbols

A_f	floor surface area
A_t	total area of enclosure (walls, ceiling and floor, including openings) (m^2)
A_v	total area of vertical openings on all walls (m^2)
D	diameter of fire source (m)
EC	Eurocode
O	opening factor of the fire compartment ($m^{1/2}$)
O_{lim}	reduced opening factor in case of fuel controlled fire ($m^{1/2}$)
RMT	maximum rebar temperature (°C)
T_g	gas temperature (°C)
T_0	ambient temperature (°C)
$V_{Ed,fi}$	the design value of the fire induced shear load
$V_{Rd,fi}$	the design value of shear resistance in case of fire
b	thermal inertia for the total enclosure ($J/m^2 \cdot s^{1/2} \cdot K$)
c	specific heat (J/kg·K)
dx	grid size (m)
h_c	convective coefficient of exposed side ($W/m^2 \cdot K$)
h_b	convective coefficient of unexposed side ($W/m^2 \cdot K$)
h_{eq}	weighted average of window heights on all walls
k	thermal conductivity (W/m·K)
m	combustion factor
$q_{f,d}$	design fire load density related to the floor area A_f (MJ/m^2)
$q_{f,k}$	characteristic fire load density related to the surface area A_f (MJ/m^2)
$q_{t,d}$	design fire load density related to the surface area A_t (MJ/m^2)
t_{lim}	time to reach maximum gas temperature in case of fuel controlled fire (h)
t_{max}	time to reach maximum gas temperature (h)
t_{RMT}	time to reach the rebar maximum temperature (min)
Γ	time factor function of the opening factor O and the thermal absorptivity b
Γ_{lim}	time factor function of the opening factor O_{lim} and the thermal absorptivity b
ε	surface emissivity of the member
ρ	density (kg/m^3)

© ISO 2017 – All rights reserved
Documents
Document Sharing Hub
Full document details: PD ISO/TR 24679-6:2017

δ_{q1} activation risk due to the size of the compartment equal to 1 in this example

δ_{q2} fire activation risk due to the type of occupancy equal to 1 in this example

δ_n factor taking into account different active fire-fighting measures equal to 1 in this example

4 Design strategy for fire safety of structure

4.1 General design process for fire safety of structures

This example studies the fire resistance assessment of an office building using ISO 24679-1. According to the history of the real fires in an open plan office, a generalized fire is possible.

Potential design fire scenarios in the build environment were studies. Temperature time curves were produced and analyses were carried out so as to identify the plausible worst case scenarios[1], [2].

In order to provide a more detailed and broader resolution of the fire scenario for the use of detailed structural analysis, the critical design fire scenario was investigated using advanced fire modelling and design fire was established.

The comprehensive structural behaviour was studied via advanced structural modelling of the worst case scenario.

Additionally, factors and influences in quantification process and uncertainty of material properties where studied. As such, a more detailed analysis was carried out by means of sensitivity analyses in which the OAT (i.e. one-factor-at-a-time) was used where only one input variable in the base case fire scenario was changed[3]. In this respect, a range of input variables in generating the fully developed fire and heat transfer models were investigated by means of a literature study.

4.2 Guidance of practical design process for fire safety of structure

ISO 24679-1:—, Table 1, illustrates various steps and parameters to be considered when assessing the behaviour of structures subjected to fire exposure. The details of the relevant steps to this example are presented in the following clauses.

5 Qualification of the performance of structures in fire

5.1 STEP 1: Scope of the project for fire safety of structure

5.1.1 Built-environment characteristics

The building studied is an open-plan office building without any interior vertical compartmentations, with a glazed façade all around the perimeter. It has a floor area of approximately 420 m^2 and total gross area of 3 360 m^2. The building is divided into two basement levels, a ground floor, and five floors above ground, which are open to the public. The building is 30,25 m long by 14,25 m wide and 25 m high. The ground floor has a height of 4 m whereas the upper storeys have a height of 3 m. Elevators and staircases are placed in the central core.

The length is divided into five structural bays, and the width into two bays. Each bay is 6 m by 7,125 m as shown in Figure 1. The building frame is composed of reinforced continuous concrete beams and columns, supporting concrete floor slabs which are 180 mm thick; the exterior walls are 200 mm thick; the columns are 500 mm by 500 mm wide, and the beams are 400 mm deep by 250 mm wide.

© ISO 2017 – All rights reserved

Documents
Document Sharing Hub
Full document details: PD ISO/TR 24679-6:2017

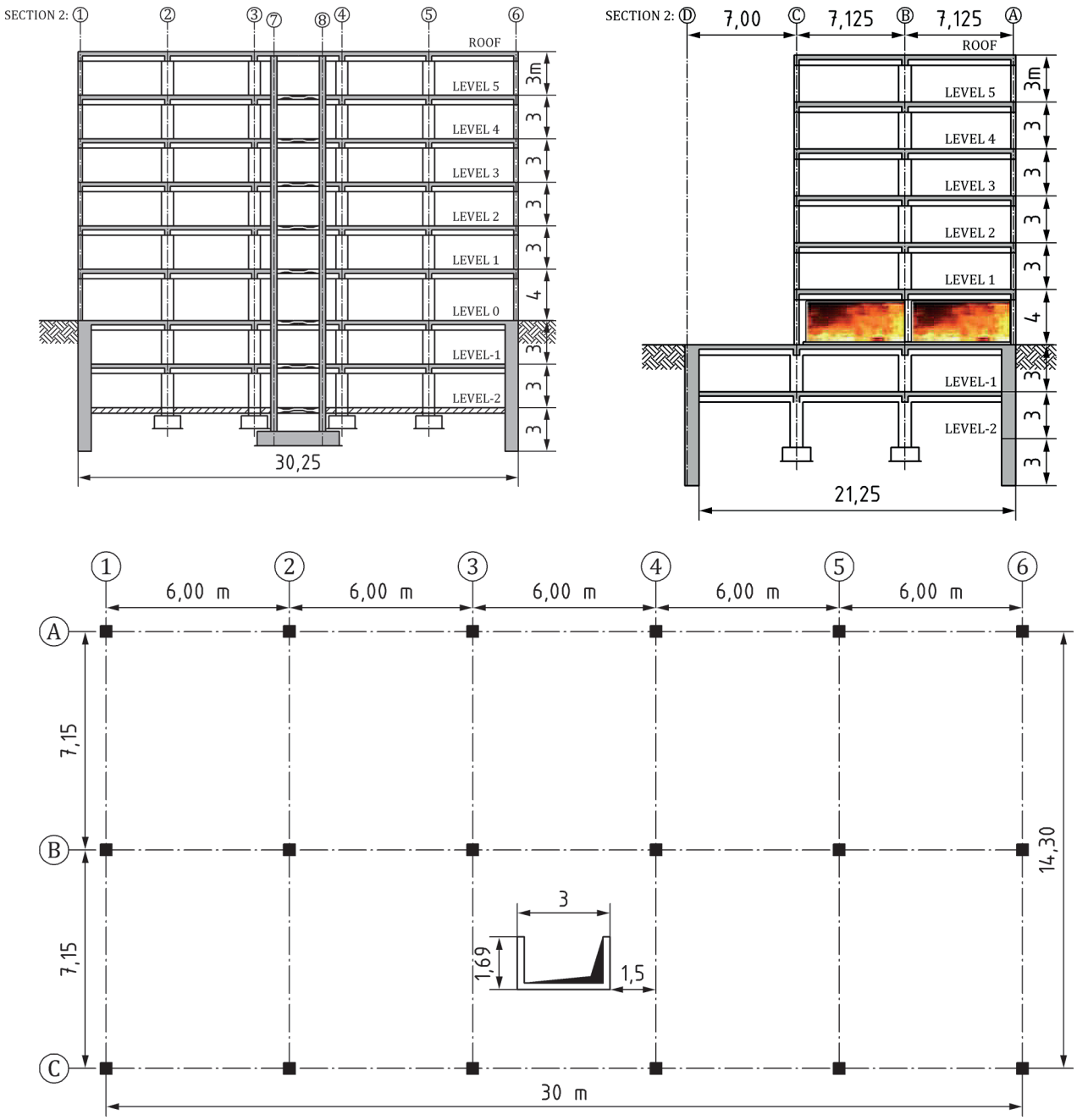

Figure 1 — Plan and elevation of the structure, dimensions in metres

The structure includes three kinds of structural members: reinforced concrete columns, beams and slabs. The cross section of the column is equal to 0,25 m^2 and is presented in Figure 2. For the first floor, the height of the column is equal to 4 m whereas the upper storeys have a column height of 3 m. The materials are:

— concrete: C30/37;

NOTE 30 and 37 are the characteristic cylinder and cube compressive strengths, respectively, in Mpa.

— steel: hot rolled, grade 500 class B.

© ISO 2017 – All rights reserved
Documents
Document Sharing Hub
Full document details: PD ISO/TR 24679-6:2017

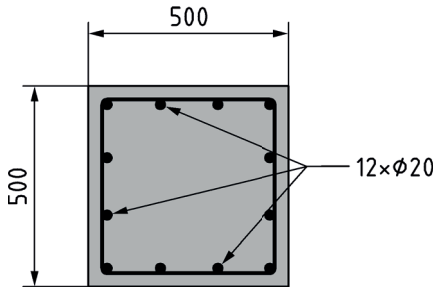

Figure 2 — Column cross section

The reinforcement in the column and the axis distance are presented in Table 1.

Table 1 — Column reinforcements and the axis distance of reinforcements

Column	Ø	Axis distance
Longitudinal reinforcement	12 Ø 20	52 mm
Stirrups	Ø12/200 mm	36 mm

In Figure 3, the cross sections of the beams are illustrated. The materials are as follows:

— concrete: C25/30;

— steel: hot rolled, grade 500 class B.

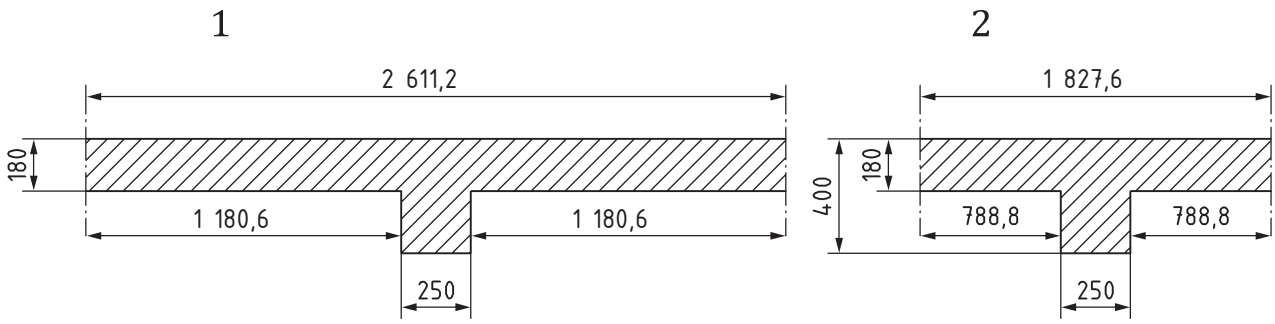

Key

1 cross-section at mid-span

2 cross section at intermediate support

Figure 3 — Continuous beam cross section

The reinforcement and the axis distances in the beams are presented in Table 2.

Table 2 — Reinforcement and axis distance in the beams

Beam	Perimeter support	Mid-span	Intermediate support	Axis distance
Upper	7 Ø12	2 Ø10	9 Ø12	42 mm
Lower	3 Ø16	3 Ø16	3 Ø16	44 mm
Stirrups	Ø8/175 mm	Ø8/175 mm	Ø8/175 mm	34 mm

The slab is 180 mm thick and the reinforcement is presented in Figure 4 and Table 3. The materials are as follows:

— concrete: C25/30 concrete;

© ISO 2017 – All rights reserved

Documents
Document Sharing Hub
Full document details: PD ISO/TR 24679-6:2017

— steel: hot rolled, grade 500 class B.

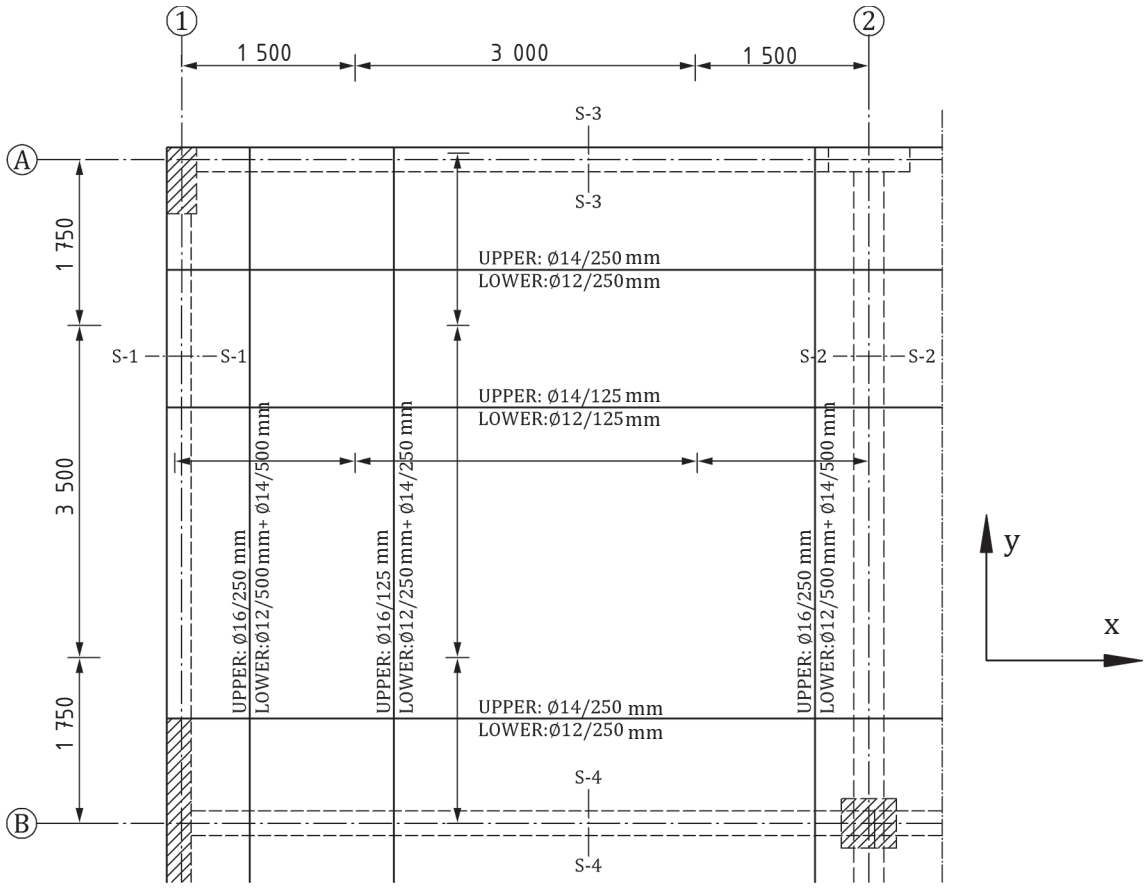

Figure 4 — Reinforcement distribution in the slab

Table 3 — Slab reinforcement and axis distance

X direction slab	Middle strip (3 m)	Axis distance
Upper	Ø14/125 mm	37 mm
Lower	Ø12/125 mm	36 mm
Y direction slab	**Middle strip (3 m)**	**Axis distance**
Upper	Ø16/125 mm	52 mm
Lower	Ø12/250 mm Ø14/250 mm	49 mm

NOTE Stress-strain relationships of concrete and steel are given in Reference [4] As such, an explicit model for transient strain was applied. Tensile strength of concrete has been considered in the advanced modelling.

5.1.2 Fuel loads

The building is an office space with cellulosic (i.e. majority of fuel load), plastic, and miscellaneous type fuel, which is assumed to be uniformly distributed throughout the compartment. The fuel load varies greatly depending on the building types and available guidance provides typical ranges. Moreover, the fire load density from construction elements, linings and finishing should be calculated and added to the tabulated fire load densities[5][6].

There is no clear information on the use of this building. As such, potential fire scenarios with possible fire load densities for sparsely furnished (i.e. office machine sales) to densely loaded (i.e. business

© ISO 2017 – All rights reserved
Documents
Document Sharing Hub
Full document details: PD ISO/TR 24679-6:2017

office, library) ranging from 350 MJ/m^2 to 1 350 MJ/m^2[6] were examined to define the acceptable fuel load density in this building.

5.1.3 Mechanical actions

Dead and live loads are presented in Table 4.

Table 4 — Loads

	Load name	Value of load
Dead load	Self-weight	25 kN/m^3
	Finishing, pavement, embedded services, partition	1,5 kN/m^2
Live/variable load	Office	4 kN/m^2

The mechanical action in fire situation was determined in accordance with Reference [7]. Consequently, the load combination given in Formula (1) was used:

$$G + \Psi_{2,i} Q_i \tag{1}$$

where

G is the sum of all the permanents loads;

Q is the dominant live load;

Ψ_2 = 0,6.

The loads which were used for calculation with an advanced structural model (finite element model in 3D that takes account of the nonlinearities of materials and geometric) are summarized in Table 5.

NOTE No wind action was considered because Ψ_2 = 0 for wind. The charge from upper storeys will be added in detailed structural modelling.

Table 5 — Used loads in detailed structural analysis

				Unit
Slab	Dead load (G)	0,18 × 25 +1,5	6	$\frac{kN}{m^2}$
	Live load (Q)	4	4	
	Total load	**G + 0,6Q**	**8,4**	
Exterior beams	Dead load (G)	0,25 × 0,40 × 25	2,5	$\frac{kN}{m}$
	Dead load façade (G_F)	8	8	
	Total load	**G+G$_F$**	**10,5**	
Interior beams	Dead load (G)	0,25 × 0,40 × 25	2,5	$\frac{kN}{m}$
	Total load	**G**	**2,5**	

For the detailed structural analysis, only the first floor was modelled in a structural modelling software. This assumption was discussed in 5.6.2. The action of the floors above was considered in the detailed structural analysis, by applying vertical forces acting at the top of the first floor columns.

The vertical forces representing the floors above are presented in the Figure 5.

© ISO 2017 – All rights reserved

Documents
Document Sharing Hub
Full document details: PD ISO/TR 24679-6:2017

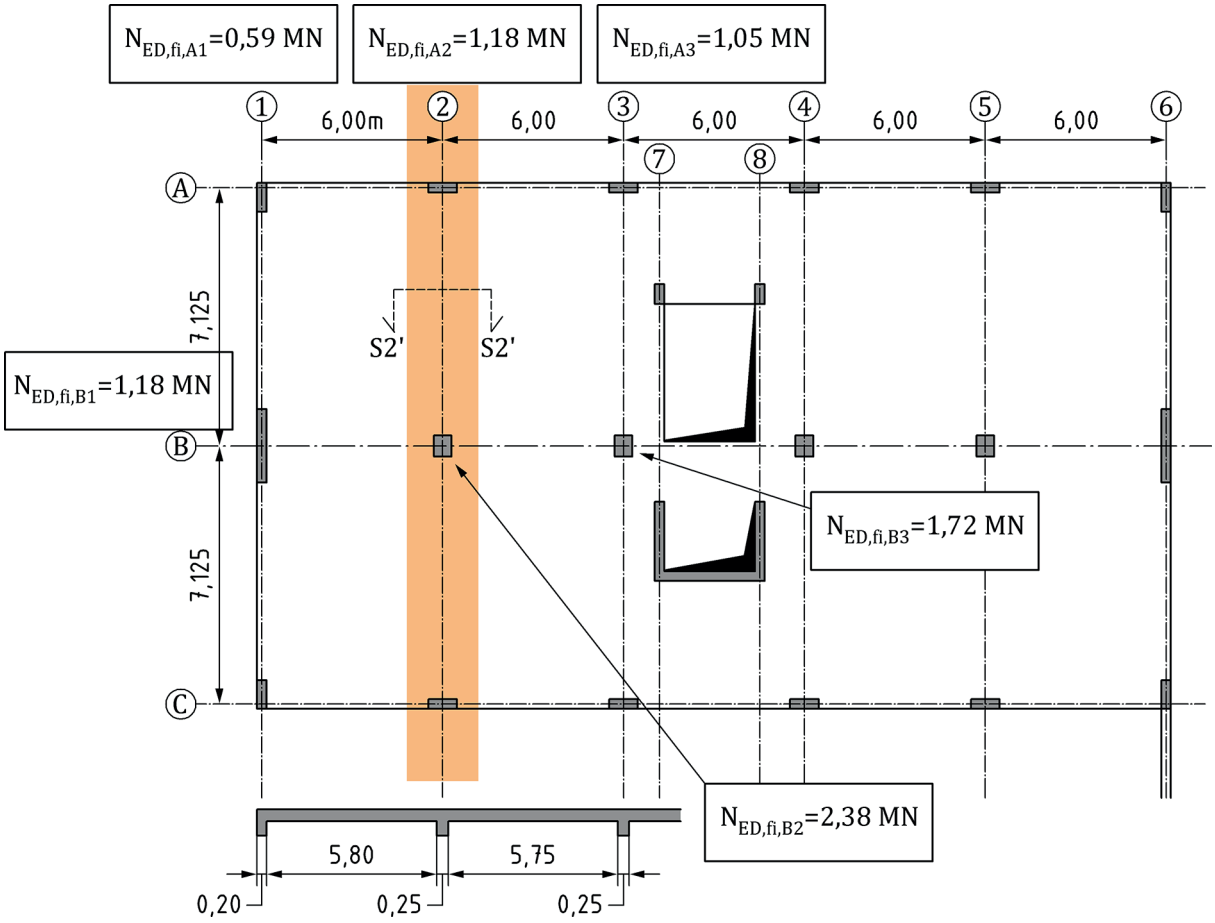

Figure 5 — Vertical forces representing the floors above

5.2 STEP 2: Identifying objectives, functional requirements, and performance criteria for fire safety of structure

The objectives of structural fire safety in this study are:

— life safety of occupants, fire-fighters and others in the vicinity of building in terms of structural behaviour of building in the event of fire;

— conservation of property and continuity of operation.

The functional requirement consists of structural stability to prevent failure of any structural element during the entire duration of fire, including the cooling phase. It results to prevent the fire from spreading to other storeys due to failure of floor and ceiling within the compartment.

A set of performance criteria were selected to fulfil the above objectives and functional requirements:

— the maximum temperature in the tension reinforcement of the concrete structure: It allowed to rapidly compare the relative impact of large numbers of potential design fire scenarios and to identify the critical fire scenario for detailed structural analysis[8].

The following performance criteria in terms of structural stability were assumed for the detailed structural analysis:

— no overall failure of the building, e.g. due to the loss of stability of columns, shear failure, rotational capacity;

— maximum deflection of all slabs does not exceed 1/20 of their spans;

© ISO 2017 – All rights reserved
Documents
Document Sharing Hub
Full document details: PD ISO/TR 24679-6:2017

— rotational capacity does not exceed 250 mrad[9].

The critical temperature of tension reinforcement at elevated temperature was calculated assuming a reduction of 0,6 for the design load level in the relevant the fire situation[4] and a partial safety factor of 1,15 for reinforcing steel according with Reference [10]. As such, failure in selected structural member occurred when the characteristic strength of reinforcement steel reached 0,52 of its original capacity. In accordance with 4.2[4], for reinforcing steel (hot rolled) in concrete and for strain larger than 2 % (which is the case for slabs and beams with no high reinforcement ratio), the critical temperature is 583 °C. For the purpose of this document, the value was conservatively taken as 560 °C.

Figure 6 shows a summary of applied methodology in this document.

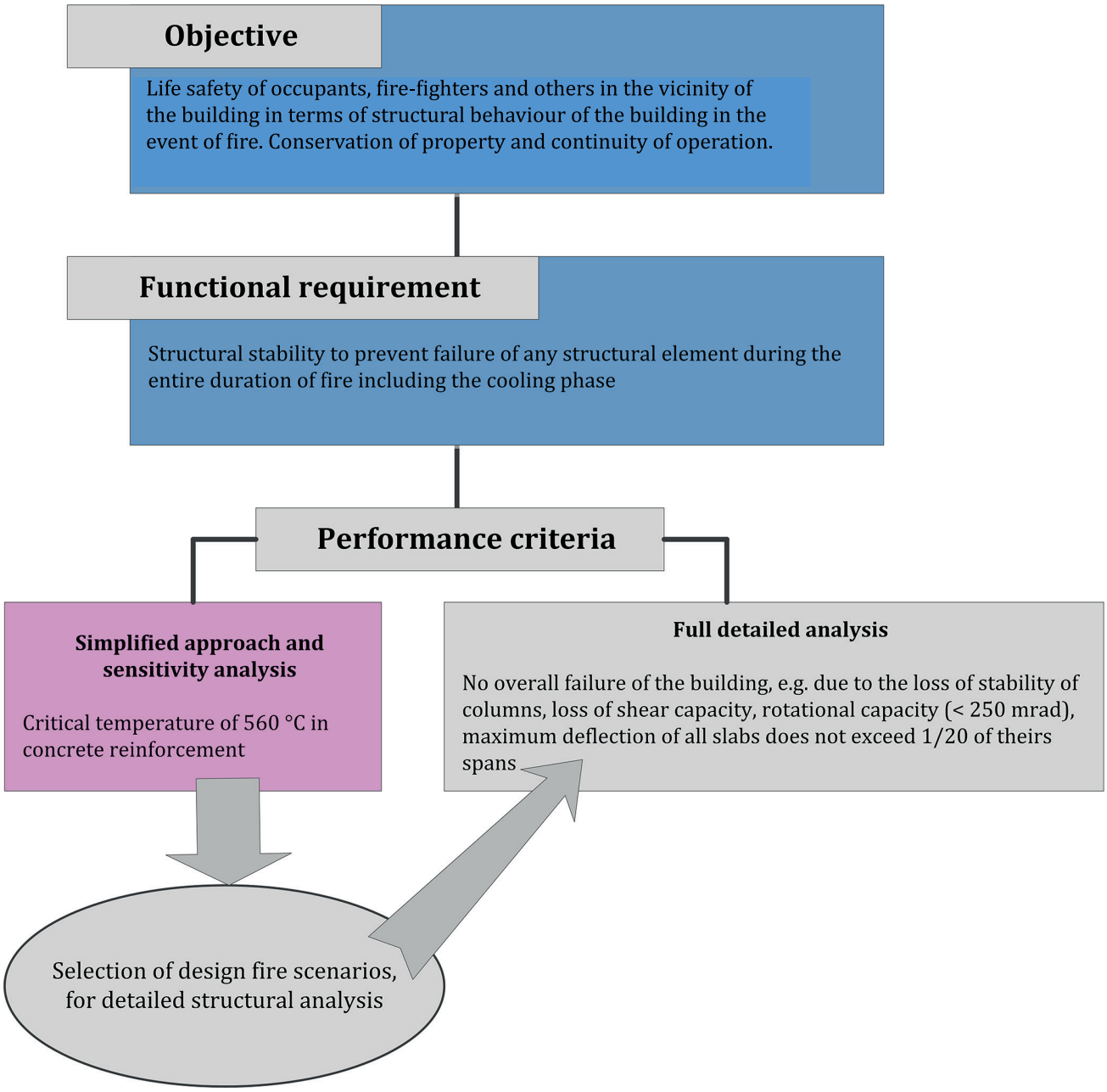

Figure 6 — Schematic overview of the applied methodology

© ISO 2017 – All rights reserved

Documents
Document Sharing Hub
Full document details: PD ISO/TR 24679-6:2017

5.3 STEP 3: Trial plan for fire safety of structure

The office building studied here has been designed for the ambient temperature. Structural elements are not protected by any passive or active fire protection systems.

The staircase with surrounding walls of 120 mm has a fire resistance of R120 in accordance with References [4] and [11], which provides the safe egress route for the people and firefighters in the vicinity of building during the fire. Lift should not be used in the case of the fire.

It was assumed that floors and roof sustain their structural fire performance over the whole duration of fire and does not contribute to interior fire spread. This was examined in the detailed structural analysis in the following clauses. The external fire spread to other storeys is assumed to be controlled by measures such as fire protection glass. As such, no multi-storey fire was considered in this example.

5.4 STEP 4: Design fire scenarios and design fires

5.4.1 General

Design fire scenarios and design fires are an important step in the assessment of the performance of structures in fire. It should be noted that a design fire scenario is a specific qualitative description of the development of a fire whereas a design fire (thermal action) is a quantitative description of assumed fire characteristics within a design fire scenario.

See ISO 16733-1[2] and ISO/TS 16733-2[12] for more information about the selection of design fire scenarios and design fires.

5.4.2 Design fire scenarios

The relative impact of a fully developed fire was studied according to the history of the real fires in an office. The location of fire was taken to occur on the ground floor. This enabled the structural effects of a low level story fire to be analysed without the need to explicitly consider the effects caused by the foundations or the top storey of the building. This also enables to determine the performance of structure considering that columns in the ground floor were the most critical load bearing elements and had the largest height in the studied building. Nevertheless, it seems obvious that the size of the concrete columns and their reinforcement ratio are varying over the various levels of the building, but for the purpose of simplicity of this example, it is assumed that the fire in the ground floor is the best representative fire scenario. All stories have an identical architectural plan with identical fire scenarios.

This building is an open-plan office without any interior compartmentation and a fully developed fire engulfs the whole floor surface.

The design Fire scenario was selected as follows.

Initially, a group of fire scenarios were produced using a fuel load density of 511 MJ/m^2, 80 % fractile) in accordance with Reference [5] and different opening factors (ventilation sizes). The worst case scenario was identified as the “base case scenario”. The base case was then used to produce other potential scenarios for the possible range of fuel load. Potential fire scenarios were compared to identify the acceptable fuel load density in this building and therefore the plausible worst fire scenario. It was then examined whether changes in opening factors have any impact on the identified fire scenario.

At this stage, the temperature in the reinforcement rebar in concrete element was used as a simple and easily comparable scale to compare the relative impact of different potential fire scenarios and to identify the worst condition.

© ISO 2017 – All rights reserved
Documents
Document Sharing Hub
Full document details: PD ISO/TR 24679-6:2017