PD ISO/TR 25901-3:2016

BSI Standards Publication

Welding and allied processes — Vocabulary

Part 3: Welding processes

bsi.

...making excellence a habit.™

Document Sharing Hub

National foreword

This Published Document is the UK implementation of ISO/TR 25901-3:2016.

The UK participation in its preparation was entrusted to Technical Committee WEE/1, Briefing committee for welding.

A list of organizations represented on this committee can be obtained on request to its secretary.

This publication does not purport to include all the necessary provisions of a contract. Users are responsible for its correct application.

© The British Standards Institution 2016. Published by BSI Standards Limited 2016

ISBN 978 0 580 86433 9

ICS 01.040.25; 25.160.10

Compliance with a British Standard cannot confer immunity from legal obligations.

This Published Document was published under the authority of the Standards Policy and Strategy Committee on 31 March 2016.

Amendments issued since publication

Date	Text affected

Documents
Document Sharing Hub

Full document details: PD ISO/TR 25901-3:2016

TECHNICAL REPORT

ISO/TR 25901-3

First edition
2016-03-15

Welding and allied processes — Vocabulary —

Part 3: Welding processes

Soudage et techniques connexes — Vocabulaire —

Partie 3: Procédés de soudage

Reference number
ISO/TR 25901-3:2016(E)

AVA Documents
Document Sharing Hub
© ISO 2016

Full document details: PD ISO/TR 25901-3:2016

COPYRIGHT PROTECTED DOCUMENT

© ISO 2016, Published in Switzerland

All rights reserved. Unless otherwise specified, no part of this publication may be reproduced or utilized otherwise in any form or by any means, electronic or mechanical, including photocopying, or posting on the internet or an intranet, without prior written permission. Permission can be requested from either ISO at the address below or ISO's member body in the country of the requester.

ISO copyright office
Ch. de Blandonnet 8 • CP 401
CH-1214 Vernier, Geneva, Switzerland
Tel. +41 22 749 01 11
Fax +41 22 749 09 47
copyright@iso.org
www.iso.org

© ISO 2016 – All rights reserved

Documents
Document Sharing Hub

Full document details: PD ISO/TR 25901-3:2016

Contents

Page

Foreword ..... **iv**

1 Scope **1**

2 Terms and definitions **1**
2.1 Basic terms and definitions 1
2.2 Terms related to welding processes 2
2.2.1 Welding with pressure 2
2.2.2 Fusion welding 22

Annex A (informative) **Alphabetical index of English terms with French and German translations** **38**

Annex B (informative) **Alphabetical index of welding processes related terms defined in ISO 857-1:1998 that were not included in this part of ISO/TR 25901** **44**

Bibliography **45**

© ISO 2016 – All rights reserved

Documents
Document Sharing Hub
Full document details: PD ISO/TR 25901-3:2016

Foreword

ISO (the International Organization for Standardization) is a worldwide federation of national standards bodies (ISO member bodies). The work of preparing International Standards is normally carried out through ISO technical committees. Each member body interested in a subject for which a technical committee has been established has the right to be represented on that committee. International organizations, governmental and non-governmental, in liaison with ISO, also take part in the work. ISO collaborates closely with the International Electrotechnical Commission (IEC) on all matters of electrotechnical standardization.

The procedures used to develop this document and those intended for its further maintenance are described in the ISO/IEC Directives, Part 1. In particular the different approval criteria needed for the different types of ISO documents should be noted. This document was drafted in accordance with the editorial rules of the ISO/IEC Directives, Part 2 (see www.iso.org/directives).

Attention is drawn to the possibility that some of the elements of this document may be the subject of patent rights. ISO shall not be held responsible for identifying any or all such patent rights. Details of any patent rights identified during the development of the document will be in the Introduction and/or on the ISO list of patent declarations received (see www.iso.org/patents).

Any trade name used in this document is information given for the convenience of users and does not constitute an endorsement.

For an explanation on the meaning of ISO specific terms and expressions related to conformity assessment, as well as information about ISO's adherence to the WTO principles in the Technical Barriers to Trade (TBT) see the following URL: Foreword - Supplementary information

The committee responsible for this document is ISO/TC 44, *Welding and allied processes*, Subcommittee SC 7, *Representation and terms*, in collaboration with Commission VI, *Terminology, of the International Institute of Welding* (*IIW*).

This first edition of ISO/TR 25901-3, together with the other parts of ISO/TR 25901, cancels and replaces ISO 857-1:1998 and ISO/TR 25901:2007, of which it constitutes a revision.

ISO/TR 25901 consists of the following parts, under the general title *Welding and allied processes — Vocabulary*:

— *Part 1: General terms [Technical Report]*

— *Part 3: Welding processes [Technical Report]*

— *Part 4: Arc welding [Technical Report]*

The following parts are under preparation:

— *Part 2: Safety and health [Technical Report]*

Friction welding is to form the subject of a future part 5.

Requests for official interpretations of any aspect of this International Standard should be directed to the Secretariat of ISO/TC 44/SC 7 via your national standards body. A complete listing of these bodies can be found at www.iso.org.

© ISO 2016 – All rights reserved
Documents
Document Sharing Hub
Full document details: PD ISO/TR 25901-3:2016

Welding and allied processes — Vocabulary —

Part 3: Welding processes

1 Scope

This part of ISO/TR 25901 contains terms and definitions for welding processes, classified in accordance with their physical characteristics and to the relevant energy carrier.

It does not contain terms and definitions related to specific processes or particular aspects of welding and allied processes that are covered in other parts of this Technical Report (see Foreword) or in other ISO standards.

In the main body of this part of ISO/TR 25901, terms are arranged in a systematic order. Annex A provides an index in which all terms are listed alphabetically with reference to the appropriate subclause. In addition, it provides French translations, covering two of the three official ISO languages (English, French and Russian). German translations are also provided; these are published under the responsibility of the member body for Germany (DIN) and are given for information only.

NOTE 1 Only the terms given in the official languages (English, French and Russian) are to be considered as ISO terms and definitions.

NOTE 2 All these terms and definitions are also available on the ISO Online Browsing Platform (OBP): https://www.iso.org/obp/ui/

2 Terms and definitions

For the purposes of this document, the following terms and definitions apply.

2.1 Basic terms and definitions

2.1.1
metal welding
operation which unifies metal(s) by means of heat or pressure, or both, in such a way that there is continuity in the nature of the metal(s) which has (have) been joined

Note 1 to entry: A filler metal, the melting temperature of which is of the same order as that of the parent metal(s), can be used and the result of welding is the weld.

Note 2 to entry: This definition also includes surfacing.

2.1.2
welding with pressure
welding in which sufficient external force is applied to cause a greater or lesser degree of plastic deformation of both the faying surfaces, generally without the addition of filler metal

Note 1 to entry: Usually, but not necessarily, the faying surfaces are heated in order to permit or to facilitate unifying.

2.1.3
fusion welding
welding without application of external force in which the faying surface(s) has (have) to be molten

Note 1 to entry: Usually, but not necessarily, molten filler metal is added.

© ISO 2016 – All rights reserved

Documents Document Sharing Hub

Full document details: PD ISO/TR 25901-3:2016

2.1.4
energy carrier
physical phenomenon which provides the energy required for welding either by transmission to or by transformation within the workpiece(s)

Note 1 to entry: The following energy carriers with their respective sequential numbers are used in 2.2:

1) solid body;

2) liquid;

3) gas;

4) electrical discharge;

5) radiation;

6) movement of a mass;

7) electric current;

8) unspecified.

Note 2 to entry: When welding using a solid body, a liquid, a gas or an electrical discharge, the heat required for welding should be applied to the workpiece(s), while when welding by means of a beam of radiant energy, movement of mass or electric current, the heat (or the mechanical energy in cold welding with pressure) is generated by energy transformation within the workpiece itself.

For a solid body, liquid and gas, the decisive factor is their enthalpy. Electrical discharge and current passage are mechanisms guiding the energy of moving charged particles to the welding zone. In the case of an electrical discharge, this is done by plasma or sparks and in the case of electric current, by resistance heat where the current is produced by induction or transmitted by conduction.

Radiation is propagation of energy in the sense of dissemination of waves by light or charged particle beams. For movement of a mass, the characteristic factors are force and displacement in time. Different kinds of movement are translational motion, rotation and oscillation.

2.2 Terms related to welding processes

2.2.1 Welding with pressure

2.2.1.1 Energy carrier: solid body

2.2.1.1.1
heated element welding
welding with pressure (2.1.2) where the workpieces are heated by the heating tool in the area where the joint will be made

Note 1 to entry: Heating can be constant or pulsating and the weld is made by the application of force without the addition of a filler material. The force is applied by either a wedge shaped tool or through a nozzle through which one of the workpieces is fed.

© ISO 2016 – All rights reserved
Documents
Document Sharing Hub
Full document details: PD ISO/TR 25901-3:2016

2.2.1.1.2
heated wedge welding
heated element welding (2.2.1.1.1) by means of a heated wedge

Note 1 to entry: Heated wedge welding can also be carried out by *energy carrier* (2.1.4) movement of mass (*ultrasonic welding* (2.2.1.6.1)) or as a combination of both.

Note 2 to entry: Heated wedge welding is illustrated in Figure 1.

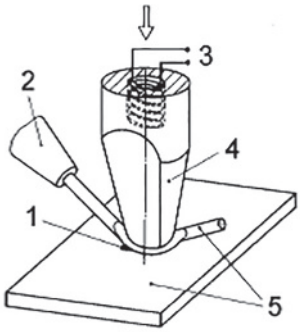

Key

1	weld	3	power source	5	workpiece
2	workpiece feed	4	wedge-shaped tool		

Figure 1 — Heated wedge welding

2.2.1.1.3
heated nozzle welding
heated element welding (2.2.1.1.1) by means of a heated nozzle

Note 1 to entry: Heated nozzle welding can also be carried out by *energy carrier* (2.1.4) movement of mass (*ultrasonic welding* (2.2.1.6.1)) or as a combination of both.

Note 2 to entry: Heated nozzle welding is illustrated in Figure 2.

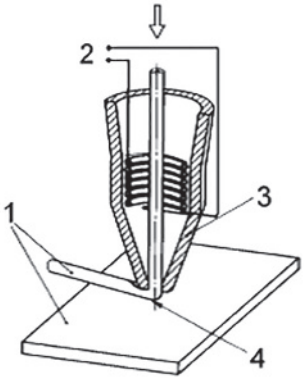

Key

1	workpiece	3	nozzle
2	power source	4	weld

Figure 2 — Heated nozzle welding

© ISO 2016 – All rights reserved

Documents
Document Sharing Hub
Full document details: PD ISO/TR 25901-3:2016

2.2.1.1.4
nail head welding
heated nozzle welding (2.2.1.1.3) in which the end of one or two wires which has been fed through the nozzle and heated by a flame or electric discharge, forms a small globule, which under the effect of the applied force is flattened into the shape of a nail head

Note 1 to entry: Nail head welding can also be carried out by *energy carrier* (2.1.4) movement of mass (*ultrasonic welding* (2.2.1.6.1)) or as a combination of both.

Note 2 to entry: Nail head welding is illustrated in Figure 3.

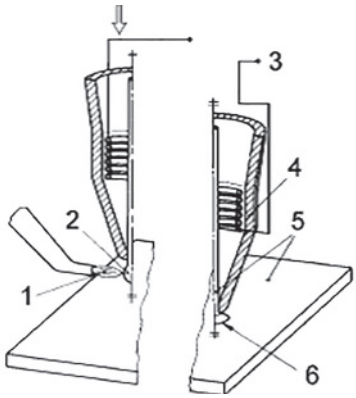

Key

1	flame	3	power source	5	workpiece
2	molten metal globule	4	nozzle	6	weld

Figure 3 — Nail head welding

2.2.1.2 Energy carrier: liquid

2.2.1.2.1
flow welding with pressure
welding with pressure (2.1.2) where the joint assembly is in a mould and molten metal is poured over the surfaces to be welded until the joint is made

Note 1 to entry: The molten metal is often produced by an aluminothermic reaction (see 2.2.2.2.2).

Note 2 to entry: Flow welding with pressure is illustrated in Figure 4.

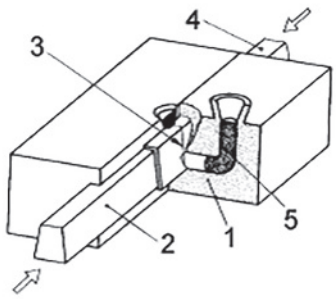

Key

1	mould	3	weld	5	molten metal
2	workpiece	4	workpiece		

Figure 4 — Flow welding with pressure

© ISO 2016 – All rights reserved
Documents
Document Sharing Hub
Full document details: PD ISO/TR 25901-3:2016

2.2.1.3 Energy carrier: gas

2.2.1.3.1
oxyfuel gas pressure welding
welding with pressure (2.1.2) in which the workpieces are heated at the faying surfaces by an oxyfuel gas flame and the weld is made by applying a force without addition of filler metal

Note 1 to entry: The assembly may be of the open or closed type.

Note 2 to entry: Oxyfuel gas pressure welding is illustrated in Figure 5.

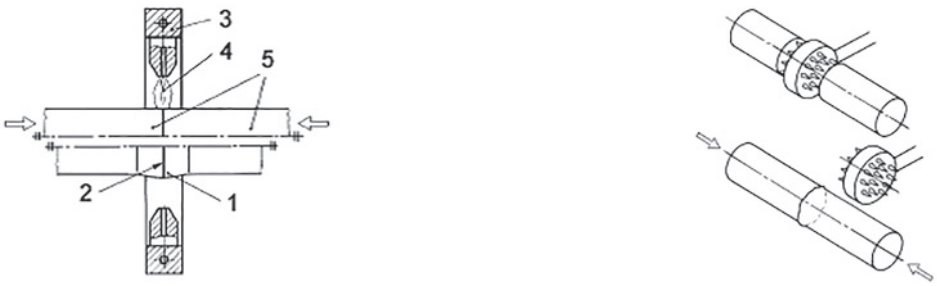

a) Closed assembly **b) Opened assembly**

Key

1	upset	3	welding blowpipe	5	workpiece
2	weld	4	gas flame		

Figure 5 — Oxyfuel gas pressure welding

2.2.1.4 Energy carrier: electric discharge

2.2.1.4.1
magnetically impelled arc welding
DEPRECATED: magnetically impelled arc butt welding
arc welding (2.2.2.4.1) with pressure in which an arc, impelled by a magnetic field, moves along the joint, heating the faying surfaces which are then brought together by a force and welded

2.2.1.4.2
percussion welding
welding with pressure (2.1.2) employing the heat from an arc produced by a rapid discharge of electrical energy

Note 1 to entry: Pressure is applied percussively during or immediately following the electrical discharge. It can be accompanied by additional resistance heating.

Note 2 to entry: This process is mainly used for the welding of studs.

2.2.1.4.3
arc stud welding
arc welding (2.2.2.4.1)with pressure that uses an arc between a metal stud, or similar part, and the workpiece

Note 1 to entry: Ceramic ferrule, shielding gas or both may be used.

© ISO 2016 – All rights reserved

Documents
Document Sharing Hub
Full document details: PD ISO/TR 25901-3:2016

2.2.1.4.4
drawn arc stud welding
drawn arc stud welding with ceramic ferrule or shielding gas
arc stud welding (2.2.1.4.3) where a discharge is ignited by lifting the stud and the weld pools are shielded by a ceramic ferrule, shielding gas or both

Note 1 to entry: The welding time is usually more than 100 ms.

Note 2 to entry: Drawn arc stud welding is illustrated in Figure 6.

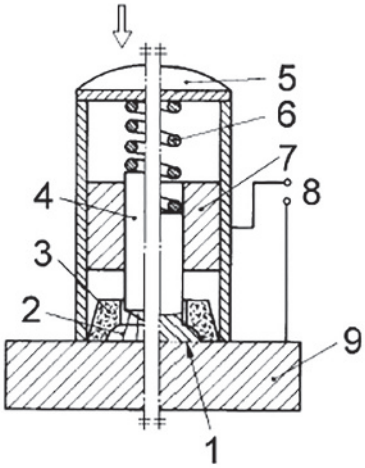

Key

1	weld	4	stud (workpiece)	7	lifting magnet
2	arc	5	welding gun	8	power source
3	ceramic ferrule	6	spring	9	workpiece

Figure 6 — Drawn arc stud welding with ceramic ferrule

2.2.1.4.5
short-cycle drawn arc stud welding
drawn arc stud welding (2.2.1.4.4) where the welding time is between 10 ms and 100 ms

2.2.1.4.6
capacitor discharge drawn arc stud welding
drawn arc stud welding (2.2.1.4.4) in which the electrical energy is provided by the discharge of a capacitor and the welding time is between 1 ms and 10 ms

Note 1 to entry: Capacitor discharge drawn arc stud welding is illustrated in Figure 7.

© ISO 2016 – All rights reserved
Documents
Document Sharing Hub
Full document details: PD ISO/TR 25901-3:2016

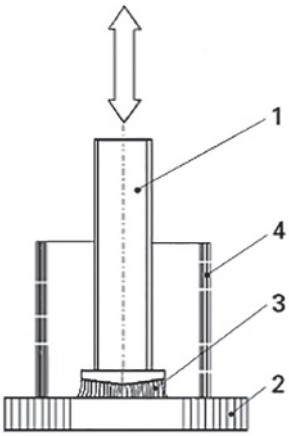

Key

1	stud	3	arc
2	workpiece	4	support tube

Figure 7 — Capacitor discharge drawn arc stud welding

2.2.1.4.7
capacitor discharge stud welding with tip ignition
arc stud welding (2.2.1.4.3) where the arc is ignited by explosively melting and partially vaporizing a specially formed tip of the stud

Note 1 to entry: The workpieces are pressed together before the capacitor is totally discharged.

Note 2 to entry: Welding time is usually between 0,5 ms and 5 ms.

Note 3 to entry: Capacitor discharge stud welding with tip ignition is illustrated in Figure 8.

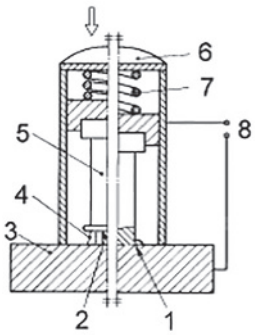

Key

1	weld	4	arc	7	spring
2	stud tip	5	stud (workpiece)	8	power source
3	workpiece	6	welding gun		

Figure 8 — Capacitor discharge stud welding with tip ignition

2.2.1.4.8
drawn arc stud welding with fusible collar
drawn arc stud welding (2.2.1.4.4) where a discharge is ignited by lifting the stud which has a fusible collar

© ISO 2016 – All rights reserved

Documents
Document Sharing Hub
Full document details: PD ISO/TR 25901-3:2016

2.2.1.5 Energy carrier: radiation

(No processes known so far)

2.2.1.6 Energy carrier: movement of a mass

2.2.1.6.1
ultrasonic welding
welding with pressure (2.1.2) in which mechanical vibrations of high frequencies and of low amplitude, superimposed on a static force, make a weld between the two workpieces to be joined at a temperature well below the melting point of the material

Note 1 to entry: Additional heat can be applied.

Note 2 to entry: Ultrasonic welding is illustrated in Figure 9.

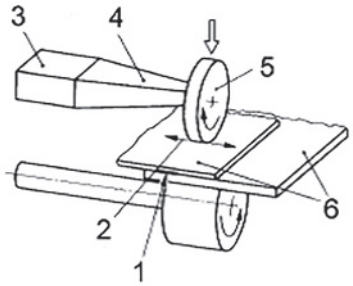

Key

1	weld	3	transducer	5	vibrating tool
2	ultrasonic vibration	4	sonotrode	6	workpiece

Figure 9 — Ultrasonic welding

2.2.1.6.2
ultrasonic hot welding
ultrasonic welding (2.2.1.6.1) in which the anvil is heated separately during the welding operation

Note 1 to entry: Ultrasonic hot welding is illustrated in Figure 10.

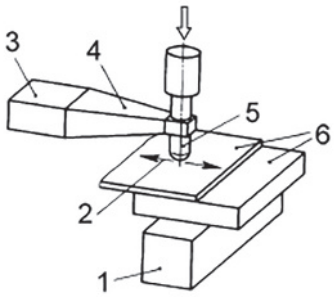

Key

1	electrically heated support (anvil)	3	transducer	5	vibrating tool
2	ultrasonic vibration	4	sonotrode	6	workpiece

Figure 10 — Ultrasonic hot welding

© ISO 2016 – All rights reserved
Documents
Document Sharing Hub
Full document details: PD ISO/TR 25901-3:2016

2.2.1.6.3
friction welding
welding with pressure (2.1.2) in which the interfaces are heated by friction normally by rotating one or both workpieces in contact with each other or by means of a separate rotating friction element

Note 1 to entry: The weld is completed by an upset force, generally after rotation has ceased.

Note 2 to entry: Friction welding is illustrated in Figure 11.

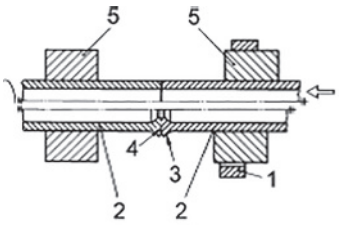

Key

1	brake	3	flash	5	clamp
2	workpiece	4	weld		

Figure 11 — Friction welding

2.2.1.6.4
direct drive friction welding
DEPRECATED: continuous drive friction welding
friction welding (2.2.1.6.3) using constant speed rotation

2.2.1.6.5
inertia friction welding
friction welding (2.2.1.6.3) where the rotational energy is stored in a fly wheel; thus the rotational speed decreases continuously

Note 1 to entry: Inertia friction welding is illustrated in Figure 12.

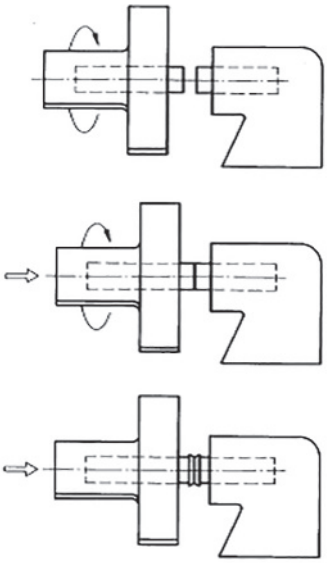

Figure 12 — Inertia friction welding

© ISO 2016 – All rights reserved

Documents
Document Sharing Hub
Full document details: PD ISO/TR 25901-3:2016

2.2.1.6.6
orbital friction welding
friction welding (2.2.1.6.3) in which an orbital motion is produced at the weld interface by rotating both the workpieces at the same speed in the same direction but displacing the axis of rotation of one workpiece slightly with respect to the other

Note 1 to entry: At the end of the displaced cycle, the workpieces are aligned again and are welded.

Note 2 to entry: Orbital friction welding is illustrated in Figure 13.

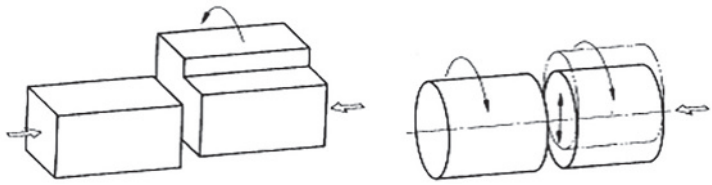

Figure 13 — Orbital friction welding

2.2.1.6.7
radial friction welding
friction welding (2.2.1.6.3) in which a shaped ring is rotated and radially compressed onto two circular hollow sections in such a manner that a joint is formed

Note 1 to entry: Conventional radial friction welding is illustrated in Figure 14 a). The technique can also be used to expand a ring inside hollow sections to form a joint; see Figure 14 b). In a third embodiment, it is possible to weld a ring usually of a dissimilar material to the outside of a solid bar; see Figure 14 c).

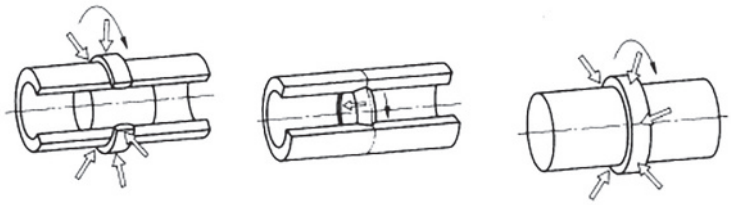

a) **b)** **c)**

Figure 14 — Radial friction welding

2.2.1.6.8
friction stud welding
friction welding (2.2.1.6.3) of studs

2.2.1.6.9
friction stir welding
joining process producing a weld by the friction heating and mixing of material in the plastic state caused by a rotating tool that traverses along the weld

Note 1 to entry: Friction stir welding is illustrated in Figure 15.

© ISO 2016 – All rights reserved
Documents
Document Sharing Hub
Full document details: PD ISO/TR 25901-3:2016

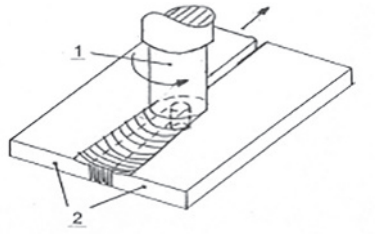

Key

1 rotating tool 2 workpiece

Figure 15 — Friction stir welding

2.2.1.6.10
shock welding
welding with pressure (2.1.2) in which the workpieces are welded by the application of a striking force

Note 1 to entry: The heat generated by the sudden collision contributes to the welding.

2.2.1.6.11
explosion welding
DEPRECATED: explosive welding
shock welding (2.2.1.6.10) in which the workpieces are welded when impacted together by the detonation of an explosive charge

Note 1 to entry: Explosion welding is illustrated in Figure 16.

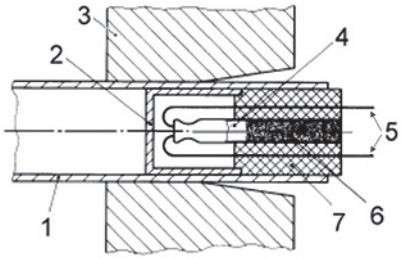

Key

1 tube
2 protective sheath
3 tube plate
4 detonator
5 detonation wires
6 main explosive charge
7 plastic transmission medium

Figure 16 — Explosion welding of tube to plate

2.2.1.6.12
magnetic pulse welding
DEPRECATED: magnetic impulse welding
shock welding (2.2.1.6.10) in which a high current impulse passing through a coil surrounding the workpieces produces a magnetic field which exerts the welding force

Note 1 to entry: Magnetic pulse welding is illustrated in Figure 17.

© ISO 2016 – All rights reserved

Documents
Document Sharing Hub
Full document details: PD ISO/TR 25901-3:2016