PD ISO/TR 27912:2016

BSI Standards Publication

# Carbon dioxide capture — Carbon dioxide capture systems, technologies and processes

Documents
Document Sharing Hub

Full document details: PD ISO/TR 27912:2016

## National foreword

This Published Document is the UK implementation of ISO/TR 27912:2016.

The UK participation in its preparation was entrusted to Technical Committee PSE/265, Carbon Capture Transportation and Storage.

A list of organizations represented on this committee can be obtained on request to its secretary.

This publication does not purport to include all the necessary provisions of a contract. Users are responsible for its correct application.

© The British Standards Institution 2016.
Published by BSI Standards Limited 2016

ISBN 978 0 580 84767 7
ICS 13.020.40

**Compliance with a British Standard cannot confer immunity from legal obligations.**

This Published Document was published under the authority of the Standards Policy and Strategy Committee on 30 June 2016.

## Amendments/corrigenda issued since publication

| Date | Text affected |
|---|---|

Documents
Document Sharing Hub

Full document details: PD ISO/TR 27912:2016

TECHNICAL REPORT

# ISO/TR 27912

First edition
2016-05-15

# Carbon dioxide capture — Carbon dioxide capture systems, technologies and processes

*Capture du dioxyde de carbone — Systèmes de capture du dioxyde de carbone, technologies et processus*

Reference number
ISO/TR 27912:2016(E)

Documents
Document Sharing Hub
© ISO 2016

Full document details: PD ISO/TR 27912:2016

**COPYRIGHT PROTECTED DOCUMENT**

© ISO 2016, Published in Switzerland

All rights reserved. Unless otherwise specified, no part of this publication may be reproduced or utilized otherwise in any form or by any means, electronic or mechanical, including photocopying, or posting on the internet or an intranet, without prior written permission. Permission can be requested from either ISO at the address below or ISO's member body in the country of the requester.

ISO copyright office
Ch. de Blandonnet 8 • CP 401
CH-1214 Vernier, Geneva, Switzerland
Tel. +41 22 749 01 11
Fax +41 22 749 09 47
copyright@iso.org
www.iso.org


© ISO 2016 – All rights reserved

Documents
Document Sharing Hub

Full document details: PD ISO/TR 27912:2016

# Contents

Page

**Foreword** ... **vii**
**Introduction** ... **viii**
**1 Scope** ... **1**
**2 Normative references** ... **1**
**3 Terms and definitions** ... **1**
**4 Symbols and abbreviated terms** ... **8**
**5 Carbon dioxide ($CO_2$) capture system** ... **12**
5.1 General ... 12
5.2 Classification of $CO_2$ capture systems ... 14
5.3 System boundary ... 16
**6 Review and documentation** ... **16**
6.1 General ... 16
6.2 Separation processes ... 18
6.2.1 Separation with sorbents/solvents ... 18
6.2.2 Separation with membranes ... 21
6.2.3 Separation by cryogenics or flash evaporation ... 22
**7 Post-combustion capture in the power industry** ... **22**
7.1 System boundary ... 22
7.1.1 Boundary with power plant or other process stream (cooling water, steam, flue gas, product $CO_2$) ... 22
7.1.2 Boundary of the PCC plant ... 25
7.1.3 Boundary with transport and storage of $CO_2$ ... 25
7.2 Technologies, equipment and processes ... 25
7.2.1 Chemical absorption process based on (alkanol-) amines (amine process) (A) ... 25
7.2.2 Chilled ammonia process (CAP) (B) ... 26
7.2.3 Amino acid salts (AAS) process (C) ... 27
7.3 Carbon dioxide streams, flue gas streams and emissions, process and waste products ... 28
7.3.1 Flue Gas streams ... 28
7.3.2 Composition of carbon dioxide streams ... 32
7.3.3 Solvent streams, reclaiming waste products ... 34
7.3.4 Waste (process) water streams ... 35
7.3.5 Emission determination and calculation ... 36
7.3.6 Process by-products ... 37
7.4 Evaluation procedure for capture performance ... 37
7.4.1 Clarification of the evaluation basis ... 38
7.4.2 Basic performance ... 38
7.4.3 Utility consumption ... 40
7.4.4 Operability (operational requirements) ... 41
7.4.5 Economic evaluation index ... 42
7.5 Safety issues ... 43
7.5.1 Safety categories ... 43
7.5.2 Relevant equipment and manifestations ... 44
7.5.3 Chemical substances and their behaviours ... 46
7.5.4 Environmental Impact Assessment (EIA) ... 49
7.5.5 Preventive measures ... 49
7.6 Reliability issues ... 52
7.6.1 Need for reliability assessment ... 52
7.6.2 Operational reliability ... 53
7.6.3 Reliability evaluation methods ... 54
7.6.4 Parameters of reliability ... 54
7.7 Management system ... 57
7.7.1 Management system between capture plant and emission sources ... 57

AVA Documents
Document Sharing Hub

© ISO 2016 – All rights reserved


Full document details: PD ISO/TR 27912:2016

7.7.2 Operational management 58
7.7.3 Relationship with other areas for CCS standardization 59
7.8 Reference plants 59

**8 Pre-combustion capture in power industry 60**
8.1 General 60
8.2 System boundary 61
8.3 Technologies, equipment and processes 62
8.3.1 Establishment of $CO_2$ capture rate 62
8.3.2 $CO_2$ capture process 62
8.4 Carbon dioxide streams, gas streams and emissions, process and waste products 65
8.4.1 $CO_2$ streams 66
8.4.2 Synthetic gas streams 68
8.4.3 Waste products 69
8.5 Evaluation procedure for capture performance 69
8.5.1 Definition of greenhouse gas (GHG) capture rate 69
8.5.2 Evaluation procedure for capture performance[96] 70
8.6 Safety issues 73
8.7 Reliability issues 74
8.8 Management system 74
8.8.1 Management system between capture plant and emission source 74
8.8.2 Operational management 75
8.8.3 Relationship with other areas for CCS standardization 76

**9 Oxyfuel combustion power plant with $CO_2$ capture 76**
9.1 System boundary 77
9.2 Technology, processes and equipment 78
9.2.1 Boiler island and auxiliary equipment 78
9.2.2 Steam turbine island and generators 79
9.2.3 Air separation unit (ASU) 80
9.2.4 Flue gas processing units (environmental island) 86
9.2.5 Flue gas condenser (flue gas cooler) 89
9.2.6 $CO_2$ processing unit (CPU) 91
9.2.7 Balance of plant 110
9.3 Product $CO_2$, other major gas streams, emissions and waste products 111
9.3.1 Product $CO_2$ 111
9.3.2 Other gas streams 114
9.3.3 Emissions and waste products from oxyfuel combustion power plant 118
9.4 Evaluation procedure for $CO_2$ capture performance 119
9.5 Safety issues 119
9.5.1 Safe operation of the ASU and handling of oxygen on site 120
9.5.2 Prevention procedure of known risks to fire and/or explosion in the boiler or mills should be revisited for oxyfuel combustion operation 121
9.5.3 Accidental release of $CO_2$, flue gases, or other inert gases including liquid gas products 121
9.5.4 Prevention of any low temperature corrosion that could compromise the structural integrity of equipment 121

**10 Capture from cement production processes[176][177] 121**
10.1 System boundary 122
10.2 Technologies, equipment and processes 123
10.2.1 Post-combustion method (PCC) 125
10.2.2 Oxy-combustion method 125
10.3 Carbon dioxide streams, gas streams and emissions, process and waste products 126
10.3.1 $NO_x$ 129
10.3.2 $SO_x$ 129
10.3.3 Dust 129
10.3.4 HCl (Hydrogen chloride) 130
10.4 Evaluation procedure for capture performance 130
10.5 Safety issues 130


© ISO 2016 – All rights reserved
Documents
Document Sharing Hub
Full document details: PD ISO/TR 27912:2016

10.6 Reliability issues ... 131
10.7 Management system ... 132

**11 $CO_2$ Capture in the iron and steel industry ... 132**
11.1 Overview — Global steel production ... 132
11.2 Point sources of $CO_2$ emissions within the iron and steel production ... 133
11.2.1 Calculation of $CO_2$ emissions from the steel mill ... 133
11.2.2 Direct $CO_2$ emissions in an integrated mill producing steel through the BF-BOF route ... 133
11.2.3 Overview of $CO_2$ emissions from alternative steel making processes ... 136
11.3 $CO_2$ reduction and CCS deployment strategy in the steel industry ... 138
11.4 Review of major $CO_2$ breakthrough programmes worldwide ... 139
11.4.1 ULCOS programme ... 139
11.4.2 COURSE50 programme ... 140
11.4.3 POSCO/RIST programme ... 141
11.5 System boundary ... 141
11.6 Capture of $CO_2$ from blast furnace gas ... 142
11.6.1 Development of chemical absorption technology under the COURSE50 programme ... 142
11.6.2 Development of chemical absorption technology under the POSCO/RIST programme ... 144
11.6.3 Development of physical adsorption technology under COURSE50 programme ... 145
11.6.4 ULCOS BF — Oxygen-blown BF with top gas recycle ... 146
11.6.5 Other commercial development ... 148
11.7 Specific energy consumption of $CO_2$ captured ... 150
11.8 Gas streams ... 153
11.8.1 Conventional blast furnace gas (BFG) ... 153
11.8.2 BFG from an oxygen-blown BF with top gas recycle (ULCOS BF) ... 153
11.9 $CO_2$ capture from alternative ironmaking process ... 154
11.9.1 Direct reduction ironmaking process ... 154
11.9.2 Smelting reduction ironmaking process ... 160
11.10 Evaluation procedures for capture processes ... 166
11.11 Reliability issues ... 166
11.12 Safety issues ... 166

**12 Capture from industrial gas production processes ... 167**
12.1 System boundary ... 168
12.1.1 Natural gas sweetening process ... 168
12.1.2 Ammonia production process ... 169
12.1.3 Hydrogen production process ... 169
12.2 Technologies, equipment and processes ... 171
12.3 Carbon dioxide streams, gas streams and emissions, process and waste products ... 172
12.3.1 Chemical absorption ... 172
12.3.2 Physical absorption process ... 173
12.3.3 Membrane separation ... 173
12.3.4 Evaluation procedure for capture performance ... 173
12.4 Safety issues ... 174
12.5 Reliability issues ... 175
12.6 Management system ... 175
12.6.1 Management system between capture plant and emission source ... 175
12.6.2 Operational management ... 177
12.6.3 Relationship with other areas for CCS standardization ... 177

**13 Discussion on possible future direction ... 177**
13.1 General ... 177
13.2 Possible area of standardization ... 178
13.3 Discussion ... 178

**Annex A** (informative) **Chemical absorption processes ... 181**

AVA Documents
Document Sharing Hub

© ISO 2016 – All rights reserved


Full document details: PD ISO/TR 27912:2016

**Annex B** (informative) **Examples of flue gas compositions** ..... **186**
**Annex C** (informative) **Physical absorption processes** ..... **190**
**Annex D** (informative) **$CO_2$ capture terms and definitions list** ..... **193**
**Bibliography** ..... **209**


© ISO 2016 – All rights reserved
Documents
Document Sharing Hub
Full document details: PD ISO/TR 27912:2016

# Foreword

ISO (the International Organization for Standardization) is a worldwide federation of national standards bodies (ISO member bodies). The work of preparing International Standards is normally carried out through ISO technical committees. Each member body interested in a subject for which a technical committee has been established has the right to be represented on that committee. International organizations, governmental and non-governmental, in liaison with ISO, also take part in the work. ISO collaborates closely with the International Electrotechnical Commission (IEC) on all matters of electrotechnical standardization.

The procedures used to develop this document and those intended for its further maintenance are described in the ISO/IEC Directives, Part 1. In particular the different approval criteria needed for the different types of ISO documents should be noted. This document was drafted in accordance with the editorial rules of the ISO/IEC Directives, Part 2 (see www.iso.org/directives).

Attention is drawn to the possibility that some of the elements of this document may be the subject of patent rights. ISO shall not be held responsible for identifying any or all such patent rights. Details of any patent rights identified during the development of the document will be in the Introduction and/or on the ISO list of patent declarations received (see www.iso.org/patents).

Any trade name used in this document is information given for the convenience of users and does not constitute an endorsement.

For an explanation on the meaning of ISO specific terms and expressions related to conformity assessment, as well as information about ISO's adherence to the World Trade Organization (WTO) principles in the Technical Barriers to Trade (TBT) see the following URL: www.iso.org/iso/foreword.html.

The committee responsible for this document is ISO/TC 265, *Carbon dioxide capture, transportation, and geological storage*.

© ISO 2016 – All rights reserved

Documents
Document Sharing Hub
Full document details: PD ISO/TR 27912:2016

# Introduction

Carbon capture and storage (CCS) is a technology to mitigate climate change. Many demonstration projects have been conducted worldwide, and $CO_2$ capture is an important process in CCS and is cost and energy intensive.

$CO_2$ capture in power industry could be classified through pre, post and oxy combustion. Technologies such as chemical and physical absorption, adsorption, and membrane separation are currently under development and are in various stages of maturity from commercial (110 MW)[1] large-scale demonstrations to laboratory-scale evaluation, and should be delivered at low cost and low energy consumption.

The objectives of this Technical Report are to specify and review existing capture technologies, equipment and processes and comprehend $CO_2$ capture systems so that this Technical Report can provide stakeholders with the guidance and knowledge necessary to develop a series of standards for $CO_2$ capture and build consensus on this standardization work in advance.

This Technical Report describes $CO_2$ capture systems based on published papers and other documents and then summarizes the different issues deemed most important by ISO/TC 265. This includes the following:

— boundary for $CO_2$ capture systems;

— technologies, equipment and processes;

— $CO_2$ streams, gas streams and emissions, processes and waste products;

— evaluation procedures for capture performance;

— safety issues on each capture system;

— reliability issues on each capture system;

— management system.


© ISO 2016 – All rights reserved
Documents
Document Sharing Hub
Full document details: PD ISO/TR 27912:2016

# Carbon dioxide capture — Carbon dioxide capture systems, technologies and processes

## 1 Scope

This Technical Report describes the principles and information necessary to clarify the $CO_2$ capture system and provide stakeholders with the guidance and knowledge necessary for the development of a series of standards for $CO_2$ capture. This Technical Report also covers technologies, equipment and processes specific to $CO_2$ capture from the viewpoints of the international standardization for the implementation of CCS.

The purpose of this Technical Report is to provide guidance for the development of an ISO document related to $CO_2$ capture as part of a CCS chain. This Technical Report covers $CO_2$ capture systems applicable to $CO_2$ emission sources and their respective boundaries, as well as capture technologies, equipment and processes. In addition, it can be used for the development of International Standards under TC 265.

The following issues are to be excluded from this Technical Report:

— industrial use of $CO_2$;

— compression of $CO_2$ (not described in detail);

— terminologies not used in this Technical Report.

## 2 Normative references

There are no normative references in this document.

## 3 Terms and definitions

For the purposes of this document, the following terms and definitions apply.

**3.1**
**absorbent**
substance able to absorb liquid or gas

**3.2**
**affinity**
tendency of substances to react with each other

Note 1 to entry: Also defined as the decrease in Gibbs energy on going from the reactants to the products of a chemical reaction.

[SOURCE: IUPAC Compendium of Chemical Terminology]

**3.3**
**air separation unit**
unit separating oxygen, nitrogen and other inert gases from air which delivers the reqired oxygen for gasification or combustion applications in the context of CCS

**3.4**
**alkanolamine**
chemical compound that carries hydroxy (–OH) and amino (–$NH_2$, –NHR, and –$NR_2$) functional groups on an alkane backbone

© ISO 2016 – All rights reserved



Documents
Document Sharing Hub

Full document details: PD ISO/TR 27912:2016

**3.5**
**amine**
chemical compound consisting nitrogen atoms bound to hydrogen and/or carbon atoms having the general formula $R_3N$

**3.6**
**amino acid**
any of a class of organic compounds in which a carbon atom has bonds to an amino group, a carboxyl group, a hydrogen atom and an organic side group

**3.7**
**antioxidant**
substance that inhibits oxidation or reactions promoted by oxygen, peroxides, or free radicals

**3.8**
**Brayton cycle**
thermodynamic cycle that describes the workings of a constant pressure heat engine such as gas turbine engine

**3.9**
**capital cost**
sum of direct equipment costs to capture $CO_2$ which is also known as investment cost or first cost

[SOURCE: IPCC Special Report on Carbon Dioxide Capture and Storage]

**3.10**
**capital requirement**
sum of direct equipment costs and indirect costs to capture $CO_2$

**3.11**
**catalyst**
substance that increases the rate of reaction without itself being consumed in the reaction

**3.12**
**CCS energy consumption**
total energy used for the development and operation of a CCS project

**3.13**
**chemical absorption**
process in which $CO_2$ is absorbed by chemical reaction

**3.14**
**circulating dry scrubber**
type of semi-dry FGD using hydrated lime as chemical reagent which is based on a circulating bed reactor set up to desulfurize the flue gas

**3.15**
**clinker**
mass of incombustible matter fused together

**3.16**
**$CO_2$ capture**
separation of $CO_2$ in such a manner as to produce a concentrated stream of $CO_2$ that can readily be transported for storage

**3.17**
**$CO_2$ capture rate**
ratio of the captured $CO_2$ mass flow rate at $CO_2$ capture system to the inlet $CO_2$ mass flow rate to $CO_2$ capture system


© ISO 2016 – All rights reserved
Documents
Document Sharing Hub
Full document details: PD ISO/TR 27912:2016

**3.18**
**$CO_2$ processing unit**
group of processes used in the purification of the $CO_2$ rich gas to a desired $CO_2$ specification

Note 1 to entry: Also known as compression and purification unit (CPU), $CO_2$ purification unit (CPU), cryogenic purification unit, gas processing unit (GPU).

**3.19**
**critical pressure**
vapour pressure at the critical temperature

**3.20**
**critical temperature**
temperature above which liquid cannot be formed simply by increasing the pressure

**3.21**
**decarboxylation reaction**
chemical breakdown of compounds containing carbonates

**3.22**
**degradation**
act or process of chemical which makes its functional effectiveness or chemical purity decrease towards the failure to meet the performance of the plant through physical and chemical breakdown or reaction with other substances

**3.23**
**dehydration**
process of removing water from a stream or material

**3.24**
**demineralized water**
**demin water**
water of which the mineral matter or salts have been removed

Note 1 to entry: Sometimes designated as demin water.

**3.25**
**demister**
device, often fitted with vapour-liquid separator vessels, to enhance the removal of liquid droplets or mist entrained in a vapour stream

**3.26**
**desorption**
release of $CO_2$ from absorbent or adsorbent

**3.27**
**direct quench**
process where hot gas is cooled by injection of water, cool gas or water immersion

**3.28**
**effluent**
flow of waste material discharged into the environment

**3.29**
**equilibrium**
state of balance between opposing forces or actions that is either static or dynamic

**3.30**
**flash gas**
gas separated from a liquid by pressure reduction

© ISO 2016 – All rights reserved

Documents
Document Sharing Hub
Full document details: PD ISO/TR 27912:2016

**3.31**
**flue gas**
gases produced by combustion of a fuel that are normally emitted to the atmosphere

**3.32**
**flue gas condenser**
process of removing water from the flue gas by cooling

**3.33**
**flue gas desulfurization**
equipment normally used in the removal of $SO_x$ in the flue gas by using chemical reagents

**3.34**
**flue gas processing unit**
unit of processes used to remove different criteria pollutants ($SO_x$, $NO_x$, PM, etc.) from flue gas of boilers or fired heaters

Note 1 to entry: Also known as environmental island, air quality control system (AQCS), gas quality control system (GQCS).

**3.35**
**forced oxidation wet flue gas desulfurization**
type of wet FGD using limestone as chemical reagent

**3.36**
**gas turbine**
machine in which a fuel is burned with compressed air or oxygen and mechanical work is recovered by the expansion of the hot products

**3.37**
**gasification**
reaction that coal, biomass, petroleum coke, or natural gas is converted into a syngas composed mainly of carbon monoxide (CO) and hydrogen ($H_2$)

**3.38**
**gasifier**
reactor in which coal, biomass, petroleum coke, or natural gas is converted into a syngas composed mainly of carbon monoxide (CO) and hydrogen ($H_2$)

**3.39**
**membrane**
permeable solid material that selectively separates the components of a fluid mixture

**3.40**
**mist**
stream of liquid in the form of very small drops

**3.41**
**nitrosamine**
any of various organic compounds which are characterized by the grouping NNO

**3.42**
**nitramine**
any of various organic compounds which are characterized by the grouping $NNO_2$

**3.43**
**off-gas**
gas that is produced as a by-product of a process


© ISO 2016 – All rights reserved
Documents
Document Sharing Hub
Full document details: PD ISO/TR 27912:2016

**3.44**
**oxy-combustion**
**oxyfuel combustion**
process involving combustion of a fuel with pure oxygen or a mixture of oxygen and re-circulated flue gas

**3.45**
**oxy-CFB boiler**
CFB boiler using technology based on oxyfuel combustion with recycled flue gas

**3.46**
**oxy-PC boiler**
PC boiler using technology based on oxyfuel combustion with recycled flue gas

**3.47**
**particulate emission**
solid and liquid particles that are by-products of combustion entrained in flue gas exiting the stack of a fossil fueled boiler

**3.48**
**permeability rate**
quantity of flow of gas (or liquid) through a membrane per unit of time and area

**3.49**
**permeance**
measure of gas actually flowing through a membrane per unit of pressure differential

Note 1 to entry: In general, it is expressed in gas permeance units (GPU).

Note 2 to entry: 1 GPU = $10^{-6}$ $cm^3$(STP)/$scm^2$(cmHg).

**3.50**
**physical absorption**
process where a solvent absorbs a gas physically with pressure and without chemical reaction

**3.51**
**post-combustion capture**
capture of carbon dioxide from flue gas stream produced by fuel air combustion

**3.52**
**power output**
electricity which is produced or supplied from a power plant

**3.53**
**pre-combustion capture**
capture of carbon dioxide following the processing of the fuel before combustion

**3.54**
**pressure swing adsorption**
method of separating gases using the physical adsorption of one gas at high pressure and releasing it at low pressure

**3.55**
**pulverized coal**
finely ground coal

**3.56**
**pulverized coal boiler**
utility boilers using pulverized fuel or coal as fuel

**3.57**
**pulverized fuel**
finely ground solid fuels such as coal or biomass

© ISO 2016 – All rights reserved

Documents
Document Sharing Hub
Full document details: PD ISO/TR 27912:2016

**3.58**
**quench**
to cool hot gas suddenly

**3.59**
**radiant quench design**
design of the process where hot gas is cooled by radiant cooler

**3.60**
**reaction rate**
speed of a chemical reaction

**3.61**
**reclaimer**
process or unit that regenerates deteriorated absorbent

**3.62**
**recycled flue gas**
flue gas recycled to moderate the combustion temperature

**3.63**
**regenerator**
see *stripper* (3.79)

**3.64**
**reliability**
ability of an item to perform a required function, under given environmental and operational conditions and for a stated period of time

[SOURCE: ISO 8402]

**3.65**
**retrofit**
modification of the existing equipment to upgrade and incorporate changes after installation

[SOURCE: IPCC Special Report on Carbon Dioxide Capture and Storage]

Note 1 to entry: See IEA Technology Roadmap: Carbon Capture and Storage.

**3.66**
**saturation**
point of a solution condition at which a solution of a substance can dissolve no more of that substance and additional amounts of it will appear as a separate phase at the stable condition

**3.67**
**scrubber**
gas liquid contactor device, normally used to remove gaseous and solid emissions from flue gas streams

**3.68**
**selectivity**
degree that one substance is absorbed in comparison to others

[SOURCE: US Department of Energy/National Energy Technology Laboratory, Advanced Carbon Dioxide Capture R&D Program: Technology Update, February 2013]

**3.69**
**shift conversion**
see *shift reaction* (3.71)

**3.70**
**shift converter**
reactor in which the water-gas shift reaction, $CO + H_2O = CO_2 + H_2$, takes place


© ISO 2016 – All rights reserved
Documents
Document Sharing Hub
Full document details: PD ISO/TR 27912:2016

**3.71**
**shift reaction**
chemical formation of carbon dioxide and hydrogen from carbon monoxide and water

**3.72**
**sludge**
semi-liquid (or semi-solid) residue or solids separated from suspension in a liquid in industrial processes and treatment of sewage and waste water

**3.73**
**slurry**
thick, flowable mixture of solids and a liquid, usually water

**3.74**
**solute**
dissolved substance in a solution

**3.75**
**solvent**
liquid substance capable of dissolving $CO_2$

**3.76**
**sorbent**
substance that absorbs $CO_2$ or to which $CO_2$ is adsorbed

**3.77**
**sour shift (reaction)**
shift reaction without removing $H_2S$ or COS

**3.78**
**steam reforming**
catalytic process in which a hydrocarbon is reacted with steam to produce a mixture of $H_2$, CO and $CO_2$

**3.79**
**stripper**
gas-liquid contacting device, in which a component is transferred from liquid phase to the gas phase

Note 1 to entry: Can also be referred to as “regenerator” or “desorber”.

**3.80**
**sweet shift (reaction)**
shift reaction after removing $H_2S$ or COS

**3.81**
**syngas**
synthetic gas produced through gasification process

**3.82**
**treated gas**
gas finally discharged from the $CO_2$ capture process in the emission side after being processed to have a lower $CO_2$ concentration than the feed gas

**3.83**
**waste water**
water for which there is no use in the process anymore

**3.84**
**water gas shift**
see *shift reaction* (3.71)

© ISO 2016 – All rights reserved

Documents
Document Sharing Hub
Full document details: PD ISO/TR 27912:2016

## 4 Symbols and abbreviated terms

| | |
|---|---|
| %RH | % relative humidity |
| AAS | Amino acid salt |
| ACI | Activated carbon injection |
| AEP | American Electric Power |
| AGR | Acid gas removal |
| AIGA | Asian Industrial Gas Association |
| AOD | Argon-oxygen decarbonization |
| AQCS | Air quality control systems |
| ASME | American Society of Mechanical Engineers |
| ASU | Air separation unit |
| A-USC | Advanced ultra-supercritical |
| BAC | Booster air compressor |
| BAHX | Brazed aluminium heat exchanger |
| BAT | Best available technology |
| BF | Blast furnace |
| BFG | Blast furnace gas |
| BFW | Boiler feed water |
| BOF | Basic oxygen furnace (also known as LD or converter) |
| BOFG | Basic oxygen furnace gas (also known as LDG or CG) |
| BOP | Balance of plant |
| BOS | Basic oxygen steelmaking |
| BREF | Best available technology reference document |
| BSF | Boiler simulator furnace |
| BTG | Steam and power generation unit |
| BTX | Benzene, toluene and xylene (also known as Benzole) |
| CalEPA | California Environmental Protection Agency |
| CAP | Chilled ammonia process |
| CAPEX | Capital expenditure |
| CAS | Chemical abstract service |
| CCF | Cyclone converter furnace |
| CCS | Carbon capture and storage |
| CCUS | Carbon capture, utilization and storage |
| CDA | Circulating dry absorber |
| CDQ | Coke dry quenching |
| CDS | Circulating dry scrubber |
| CEMS | Continuous emission monitoring system |
| CERC | Cambridge Environmental Research Center |
| CFB | Circulating fluidized bed |
| CFR | US Code of Federal Regulations |
| CG | Converter gas (also known as BOFG or LDG) |
| CGA | Compressed Gas Association |
| CIS | Commonwealth of Independent States |
| CISWI | Commercial and industrial solid waste incinerators |
| COG | Coke oven gas |


© ISO 2016 – All rights reserved
Documents
Document Sharing Hub
Full document details: PD ISO/TR 27912:2016

| | |
|---|---|
| COSHHHSE | Control of substances hazardous to health under health and safety executive |
| CPU | $CO_2$ processing unit, compression and purification unit, $CO_2$ purification unit or cryogenic purification unit |
| CSIRO | Commonwealth Scientific and Industrial Research Organization |
| CTL | Coal to liquids |
| CW | Cooling water |
| DAF | Dry ash free |
| DCAC | Direct contact and after cooler |
| DCC | Direct contact cooler |
| DCCPS | Direct contact cooler polishing scrubber |
| DP | Dew point |
| DRI | Direct reduction ironmaking |
| DSI | Direct sorbent injection |
| EAF | Electric arc furnace |
| EHS | Environmental, health and safety |
| EHSM | Environmental, health and safety management system |
| EIA | Environmental impact assessment |
| EIGA | European Industrial Gas Association |
| EOP | Electricity output penalty |
| EOR | Enhanced oil recovery |
| EPA (USEPA) | US Environmental Protection Agency |
| ESP | Electrostatic precipitator |
| ETP | Energy technology perspectives |
| EU | European Union |
| FBC | Fluidized bed combustion |
| FCV | Flow control valve |
| FD fan | Forced draft fan |
| FEED | Front end engineering design |
| FEGT | Furnace exit gas temperature |
| FF | Fabric filter or bag filter |
| FGC | Flue gas condenser |
| FGD | Flue gas desulfurization |
| FMECA | Failure mode and effects critical analysis |
| FOH | Forced outage hours |
| FOR | Forced outage rate |
| FTA | Fault tree analysis |
| GBFS | Granulated blast furnace slag |
| GCCSI | Global Carbon Capture and Storage Institute |
| GGBFS | Granulated ground blast furnace slag |
| GGH | Gas-gas heat exchanger |
| GHG | Greenhouse gas |
| GHGT | Greenhouse gas control technologies conference |
| GOX | Gaseous oxygen |
| GPU | Gas processing unit |
| GQCS | Gas quality control system |
| GTCC | Gas-fired combined cycle |

© ISO 2016 – All rights reserved

Documents
Document Sharing Hub
Full document details: PD ISO/TR 27912:2016

| | |
|---|---|
| GTL | Gas to liquids |
| HAZOP | Hazard and operability |
| HBI | Hot briquetted iron |
| HC | Hydrocarbons |
| HGI | Hard grove index |
| HM | Hot metal (also known as pig iron) |
| HP | High pressure |
| HRC | Hot rolled coil |
| HRM | Hot rolling mill (also known as HSM) |
| HRSG | Heat recovery steam generator |
| HS | Hot stove |
| HSE | Health, safety and environment |
| HSM | Hot strip mill |
| IARC | International Agency for Research on Cancer |
| ID fan | Induced draft fan |
| IEA | International Energy Agency |
| IFA | International Fertilizer Industry Association |
| IFC | International Finance Corporation |
| IGCC | Integrated coal gasification combined cycle |
| IP | Intermediate pressure |
| IPCC | Intergovernmental panel on climate change |
| ISO | International Organization for Standardization |
| JCR | Jumbo coke reactor (also known as SCS) |
| JT | Joule-Thomson |
| LCOE | Levelized cost of electricity |
| LDG | Linz-Donawitz gas (also known BOFG or CG) |
| LFO | Light fuel oil |
| LHV | Lower heating value |
| LIN | Liquid nitrogen |
| LM | Ladle metallurgy |
| LNG | Liquefied natural gas |
| LOI | Loss on ignition |
| LOX | Liquid oxygen |
| LP | Low pressure |
| LTEL | Long-term exposure limit |
| MAC | Main air compressor |
| MCR | Maximum continuous rating |
| MDT | Mean downtime |
| MHX | Main heat exchanger |
| MP | Medium pressure (also referred to as IP) |
| MTBF | Mean time between failures |
| MTPY | Million tonnes per year |
| MTTR | Mean time to repair |
| NAFTA | North American Free Trade Agreement (include USA, Mexico and Canada) |
| NEDO | New Energy and Industrial Technology Development Organization |
| NFBF | Nitrogen free blast furnace |


© ISO 2016 – All rights reserved
Documents
Document Sharing Hub
Full document details: PD ISO/TR 27912:2016

| | |
|---|---|
| NG | Natural gas |
| OBF | Oxy-blast furnace (oxygen blown blast furnace) |
| OBF-PG | OBF processed gas |
| OBF-TG | OBF raw top gas |
| OFA | Overfire air |
| OFO | Overfire oxygen |
| OHF | Open hearth furnace |
| OHSAS | Occupational health and safety assessment series |
| OPEX | Operating expenditure |
| OPERA | Operational problem analysis |
| OREDA | Offshore reliability data |
| OSHA | US Occupational Safety and Health Administration |
| Oxy-CFB | Oxyfuel combustion — circulating fluidized bed |
| Oxy-PC | Oxyfuel combustion — pulverized coal |
| PC | Pulverized coal (also known as powdered coal) |
| PCC | Post combustion capture |
| PCI | Pulverized coal injection |
| PF | Pulverized fuel |
| PFD | Process flow diagram |
| PGAN | Pressurized gaseous nitrogen |
| PHA | Process hazard analysis |
| PM | Particulate matter |
| POH | Period of hours |
| PSA | Pressure swing adsorption |
| PSM | Process safety management |
| R&D | Research and development |
| RCRA | Resource conservation and recovery act |
| REACH | Registration, Evaluation, Authorization and Restriction of Chemicals |
| RFG | Recycled flue gas |
| RIST | Research Institute of industrial science and technology |
| SC | Supercritical |
| SCGH | Steam coil gas heater |
| SCR | Selective catalytic reduction |
| SCS | Single chamber system (also known as JCR) |
| SDA | Spray dry absorber |
| SDI | Sorbent direct injection |
| SDS | Safety data sheet |
| SEC | Specific energy consumption |
| SECARB | Southeast regional carbon sequestration partnership |
| SM | Secondary metallurgy |
| SMR | Steam methane reformer |
| SNCR | Selective non-catalytic reactor |
| SPC | Specific power consumption |
| SR | Smelting reduction |
| STEL | Short-term exposure limit |
| STP | Standard temperature and pressure |

© ISO 2016 – All rights reserved

Documents
Document Sharing Hub
Full document details: PD ISO/TR 27912:2016

| | |
|---|---|
| SWIFT | Structured what-if checklist |
| TC 265 | Technical committee 265 |
| TCM | Technology Center Mongstad |
| tcs | Tonne of crude steel |
| TDL | Target detection limit |
| TGR | Top gas recycle |
| thm | Tonne of hot metal |
| tls | Tonne of liquid steel |
| TPD | Tonnes per day |
| TR | Technical Report |
| TRT | Top gas recycle turbine |
| TSA | Temperature swing adsorber |
| TWA | Time–weighted average |
| ULCOS | Ultra-low $CO_2$ steelmaking |
| USC | Ultra-supercritical |
| VLE | Vapour-liquid equilibrium |
| VOC | Volatile organic compounds |
| VPSA | Vacuum pressure swing adsorber |
| WESP | Wet ESP |
| WGS | Water gas shift (reaction) |
| WHO | World Health Organization |
| WID | Waste Incineration Directive |
| WSA | World Steel Association |
| ZR | Zero reformer |

# 5 Carbon dioxide ($CO_2$) capture system

## 5.1 General

In 2011, the global $CO_2$ emission (as reported in References [12] and [228]) was around 33,8 gigatonnes. The power generation sector was responsible for nearly 40 %; while the other industrial sector was responsible for 26 % of the $CO_2$ emissions.

Table 1 briefly summarizes the breakdown of the emissions from each sector in 2011. IEA has reported that to achieve the greenhouse gas mitigation goal for the 2DS (two-degree scenario) or 450 ppm scenario, CCS is needed to capture both energy- and process-based emissions, that is, it is important to be deployed widely not only in the power generation sector but also in various energy intensive industrial sectors.[11]


© ISO 2016 – All rights reserved
Documents
Document Sharing Hub
Full document details: PD ISO/TR 27912:2016

**Table 1 — Global $CO_2$ emissions in 2011**

| $CO_2$ Emission Sources | % of total $CO_2$ emission | Remarks |
|---|---|---|
| Power | 39 % | fossil fuel power plant<br>as large $CO_2$ stationary sources |
| Transport | 20 % | |
| Industry | 26 % | iron and steel production,<br>cement production,<br>chemicals, refining and so forth<br>as large $CO_2$ stationary sources |
| Buildings | 8 % | |
| Agriculture and others | 7 % | |
| NOTE See Reference [12]. | | |

$CO_2$ capture is the first part of the CCS chain. The $CO_2$ capture system consists of technologies, processes and equipment that enable the separation, capture and processing of $CO_2$ from gas streams (e.g. natural gas, syngas, process off-gas, flue gas) and make it suitable for transport and storage.

$CO_2$ can be captured from different stationary point sources such as: fossil fuelled power plants, steel works, cement and lime production, chemicals and petrochemicals processes, pulp and paper mills, natural gas processing plants, oil refineries and fuel conversion plants (i.e. gas to liquids or coal to liquids).

At present, the capture of $CO_2$ is an established commercial process of different industries such as natural gas processing, ammonia and urea production. Generally, the $CO_2$ captured from these processes are either released to atmosphere or used as raw materials in the production of other chemicals (i.e. urea, precipitated calcium carbonates) or sold as commodities to the EOR and food industries.

On the other hand, the capture of $CO_2$ from power plants and other energy intensive industries such as steel and cement, are now being developed and/or demonstrated with the purpose of mitigating $CO_2$ emissions through CCS.

Table 2 lists large-scale integrated projects for CCS and/or EOR that are operational or under construction and/or commissioning (i.e. execute). The list, provided by The Global CCS Institute, shows projects that capture and store $CO_2$ amount greater than 0,4 Mtpa, for gas-fired power plants and industrial processes, or greater than 0,8 Mtpa for coal-fired power plants.

**Table 2 — Large-scale integrated projects for CCS and/or EOR**

| Project Name | Project Life Cycle Stage | Country | $CO_2$ Capture Capacity (Mtpa) | Operation Date | Industry |
|---|---|---|---|---|---|
| Val Verde Natural Gas Plants | Operate | USA | 1,3 | 1972 | Natural gas processing |
| Enid Fertilizer $CO_2$-EOR Project | Operate | USA | 0,7 | 1982 | Fertiliser production |
| Shute Creek Gas Processing Facility | Operate | USA | 7,0 | 1986 | Natural gas processing |
| Sleipner $CO_2$ Storage Project | Operate | Norway | 0,9 | 1996 | Natural gas processing |
| Great Plains Synfuel Plant and Weyburn-Midale Project | Operate | Canada | 3,0 | 2000 | Synthetic NG production |
| In Salah $CO_2$ Storage | Operate | Algeria | — | 2004 | Natural gas processing |
| NOTE See Reference [13]. | | | | | |

© ISO 2016 – All rights reserved

Documents
Document Sharing Hub
Full document details: PD ISO/TR 27912:2016

**Table 2** *(continued)*

| Project Name | Project Life Cycle Stage | Country | $CO_2$ Capture Capacity (Mtpa) | Operation Date | Industry |
|---|---|---|---|---|---|
| Snøhvit $CO_2$ Storage Project | Operate | Norway | 0,7 | 2008 | Natural gas processing |
| Century Plant | Operate | USA | 8,4 | 2010 | Natural gas processing |
| Air Products Steam Methane Reformer EOR Project | Operate | USA | 1,0 | 2013 | Hydrogen production through SMR |
| Coffeyville Gasification Plant | Operate | USA | 1,0 | 2013 | Fertiliser production |
| Lost Cabin Gas Plant | Operate | USA | 0,9 | 2013 | Natural gas processing |
| Petrobras Lula Oil Field CCS Project | Operate | Brazil | 0,7 | 2013 | Natural gas processing |
| Boundary Dam Integrated CCS Project | Operate | Canada | 1,0 | 2014 | Power generation |
| Agrium Fertiliser Plant using Alberta Carbon Trunk Line (ACTL) | Execute | Canada | 0,3–0,6 | 2015 | Fertiliser production |
| Illinois Industrial CCS Project | Execute | USA | 1,0 | 2015 | Chemical production |
| Quest Project | Execute | Canada | 1,08 | 2015 | Hydrogen production through SMR |
| Uthmaniyah $CO_2$ EOR Demonstration Project | Execute | Saudi Arabia | 0,8 | 2015 | Natural gas processing |
| Gorgon Carbon Dioxide Injection Project | Execute | Australia | 3,4–4,0 | 2016 | Natural gas processing |
| Kemper County Energy Facility (formerly Kemper County IGCC Project) | Execute | USA | 3,0 | 2016 | Power generation |
| Abu Dhabi CCS Project (formerly Emirates Steel Industries CCS Project) | Execute | UAE | 0,8 | 2016 | Iron and steel production |
| Petra Nova Carbon Capture Project (formerly NRG Energy Parish CCS Project) | Execute | USA | 1,4 | 2016 | Power generation |
| North West Sturgeon Bitumen Refinery using Alberta Carbon Trunk Line (ACTL) | Execute | Canada | 1,2–1,4 | 2017 | Hydrogen production through Lurgi Gasification Process |
| NOTE See Reference [13]. | | | | | |

## 5.2 Classification of $CO_2$ capture systems

As illustrated in Figure 1, $CO_2$ capture system could be classified according to three different capture routes.

a) Post-Combustion $CO_2$ Capture: Separation of $CO_2$ from combustion flue gas.


© ISO 2016 – All rights reserved
Documents
Document Sharing Hub
Full document details: PD ISO/TR 27912:2016

b) Pre-Combustion $CO_2$ Capture: $CO_2$ removal from syngas obtained from gasification prior to its combustion[1)].

c) Oxyfuel Combustion with $CO_2$ Capture: Combustion of the fuel in nearly pure oxygen and recycled flue gas to produce a flue gas with highly concentrated $CO_2$ ready for further processing and purification to a desired $CO_2$ specification.

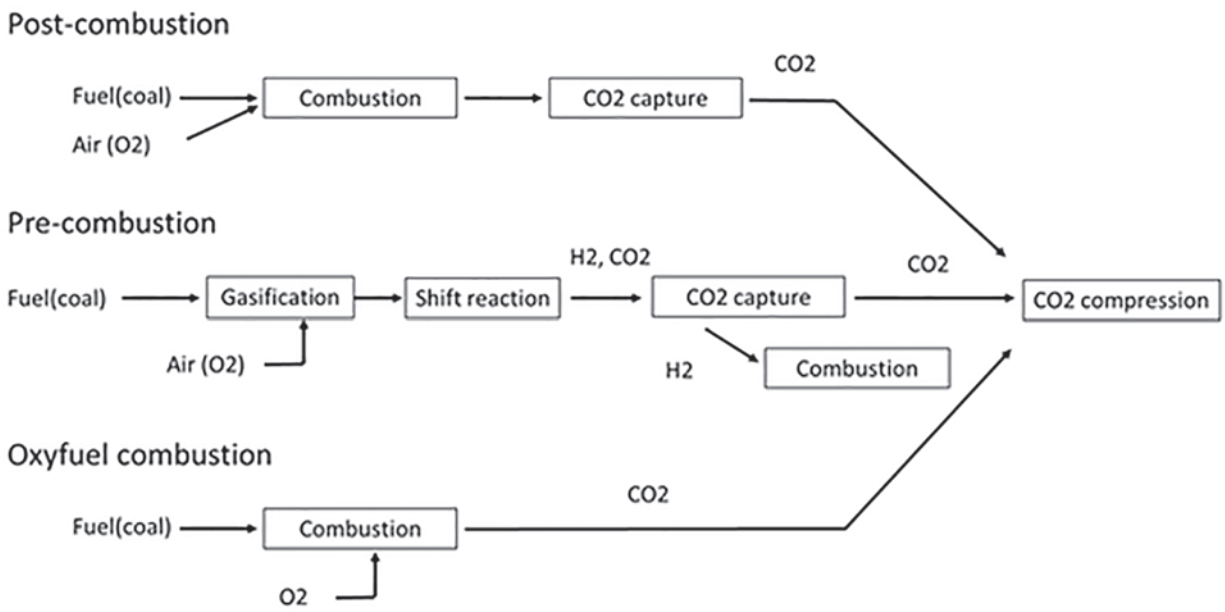


**Figure 1 — Different $CO_2$ capture routes for coal-fired power plant**

Detailed description and types of technologies, processes and equipment used in these capture routes applied to power generation industry are presented in Clauses 7, 8 and 9, respectively.

On the other hand, $CO_2$ capture system could also be classified according to the types of $CO_2$ separation and capture technologies used. This is presented in Figure 2 and explained briefly in Clause 6.

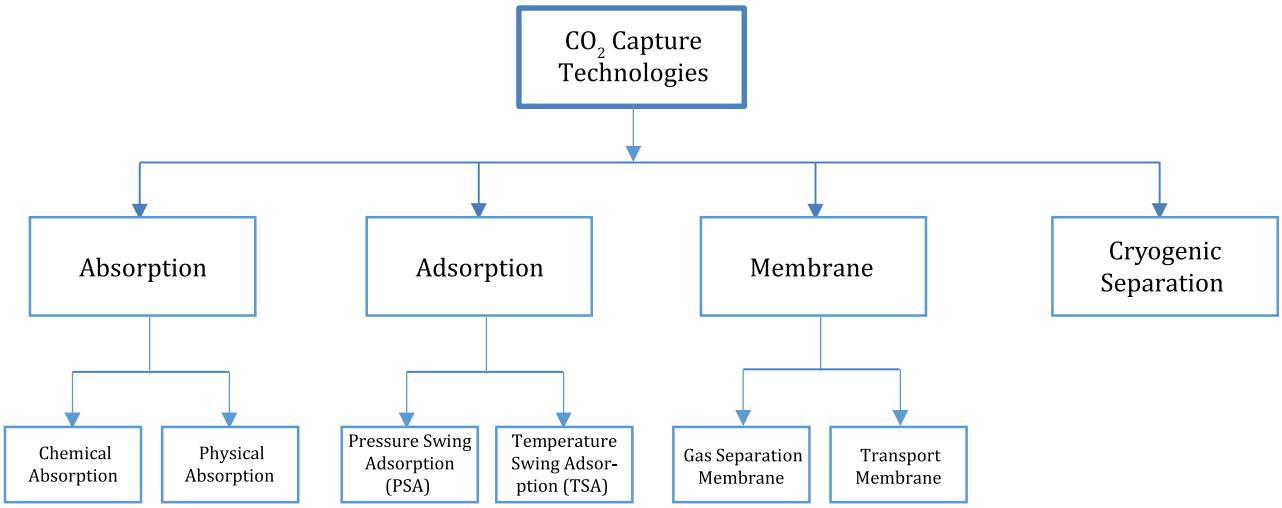


**Figure 2 — Types of $CO_2$ capture technologies**

1) Pre-combustion $CO_2$ capture is not limited to gasification. This could be used as well in natural gas processing when $CO_2$ is captured before its combustion in power plant or other appliances. Also for off-gases from SMR, ATR or others, removing the $CO_2$ before combustion.

© ISO 2016 – All rights reserved

AVA Documents Document Sharing Hub
Full document details: PD ISO/TR 27912:2016

For power generation industry, the use of both classifications is straightforward and well-defined. For industrial $CO_2$ capture, it is preferable to use technologies as the basis for classification. In fact, the definitions of post-, pre- and oxy-combustion are typically referred to power generation and, in some cases, might not be suitable to properly describe an industrial capture system if combustion process is not included.

### 5.3 System boundary

The system boundary of interest includes the host plant (i.e. power plant or industrial processes) and the $CO_2$ capture system, up to the point where $CO_2$ enters the pipeline (i.e. entry point to the $CO_2$ transport). It should be noted that $CO_2$ compression is included in the boundary of the $CO_2$ capture system; however, this is not discussed in detail in this Technical Report.

For post-combustion $CO_2$ capture, the $CO_2$ capture system is not integrated into the host plant; thus, system boundary of the capture system could be clearly defined. This could start from the point where the flue gas is taken and enters the flue gas quencher or other flue gas pre-treatment unit. It ends at the point where $CO_2$ exits from the $CO_2$ compression flange and enters the $CO_2$ pipeline. A more detailed discussion of the boundary system for post-combustion capture is presented in 7.1.

For pre-combustion $CO_2$ capture, the $CO_2$ capture system could be partially integrated into the host plant. There are several variations depending on the technology selected, the defined $CO_2$ specifications and the capture rate. The boundary between the host plant and the $CO_2$ capture system for pre-combustion capture is not well defined but could be distinguished. Generally, the $CO_2$ capture system includes the shift reactor, the acid gas removal unit and the $CO_2$ compression unit. However, it should be clearly noted that incorporating $CO_2$ capture in IGCC power plant could also impact other parts of the host plant. A more detailed discussion of the boundary system for pre-combustion capture is presented in 8.2.

For oxyfuel combustion $CO_2$ capture, the $CO_2$ capture system is fully integrated with the host plant. The system boundary for the $CO_2$ capture system could not be defined and could not be distinguished. Thus, the whole power plant should be considered as the system boundary, including the air separation unit, boiler, flue gas processing and $CO_2$ processing unit. Furthermore, it should also be noted that $CO_2$ compression is integrated into the $CO_2$ processing unit. A more detailed discussion of the boundary system for oxyfuel combustion with capture is presented in 9.1.

In conclusion, the boundary of the $CO_2$ capture system and the host plant could vary depending on the $CO_2$ capture technology selected; and the variation to the boundary system could also be site specific. A possible approach in defining the boundary system for a particular project is by using the definition of the project scope as specified in the FEED study.

## 6 Review and documentation

### 6.1 General

The following topics will be discussed with regard to the capture technologies applicable to each source:

a) system boundaries;

b) technologies, equipment and processes;

c) $CO_2$ stream, gas streams and emissions, process and waste products;

d) evaluation procedure for capture performance including energy penalties (parasitic losses) and other issues;

e) safety issues and environment impact assessment;

f) reliability issues;


© ISO 2016 – All rights reserved
Documents
Document Sharing Hub
Full document details: PD ISO/TR 27912:2016

g) management system, including interfaces

1) between capture plant and emission source, and

2) with other Working Groups of TC 265.

"System boundaries" is defined as facility boundaries to be described respectively for the above-mentioned $CO_2$ capture systems based on each of the capture technologies.

"Technologies, equipment and processes," including outlines of the capture technologies, required equipment and processes are described. Equipment and processes refer to a series of equipment and processes required to implement the aforementioned technologies. Each technology requires unique equipment and processes, which will be discussed in each clause.

"Carbon dioxide stream, gas streams and emissions, process and waste products" will provide information regarding main gas streams containing $CO_2$, remaining gas streams after $CO_2$ was captured, especially in pre-combustion capture or industrial gas production, and emissions and waste products from gas streams that occur during those processes. This subclause will also provide information related to chemical compounds occurring in capture processes or chemical compounds in waste materials arising out of such processes.

The treatment of emissions and chemical compounds or waste products that occur in capture processes should, at a minimum, comply with the regulations on the treatment, release, and disposal of chemical substances in respective countries and regions. They should be made innocuous or decreased to the prescribed value or below by incineration or other processes before they are released into the environment.

"Evaluation procedure for capture performance" will provide unique performance parameters and indicators for the capture technologies, to be used as common indicators for comparing the performances of different capture technologies. Information necessary for the relative evaluation should be provided.

"Safety and reliability issues" will describe manifested and potential issues related to safety that are specific to each capture technology and relevant to the goal of disseminating and promoting CCS. Health, safety and environment (HSE) issues will be discussed from the perspectives of facilities, operations, occupational safety and hygiene, and environment. For example, potential emissions and areas of occurrence will be described.

It should be noted that any equipment and facilities related to capture plant must comply with existing laws and regulations in each country or region.

In addition to compliance with laws and regulations relating to chemical processes and others in each country and region, it may be necessary to apply risk scenario analyses such as FMECA, HAZOP, FTA, SWIFT, and OPERA. Since each of these methods has both advantages and disadvantages,[7] it may be necessary to recommend the most appropriate method(s) for capture processes.

One of the common issues in capture technologies related to HSE is exposure to $CO_2$. The most probable routes of human exposure to $CO_2$ are inhalation or skin contact. The need for a risk-based approach is clear from the following two descriptions. $CO_2$ and its products of degradation are not classified as a toxic substance; are non-hazardous on inhalation, are non-irritant and do not sensitize or permeate the skin. However, chronic effects on humans follow from long-term exposure to airborne $CO_2$ concentrations of between 0,5 % and 1 % resulting in metabolic acidosis and increased calcium deposits in soft tissues. The substance is toxic to the cardiovascular system and upper respiratory tract at concentrations above 3 %. The product risk assessment process is therefore necessary as with any other chemical use to determine the risk and establish the necessary risk management processes.[3] Other than $CO_2$, substances such as amine, oxygen, and hydrogen also need to be considered.[10]

© ISO 2016 – All rights reserved

Documents
Document Sharing Hub
Full document details: PD ISO/TR 27912:2016

Incidentally, no management systems specific to CCS have been established so far. However, as a future item, there is a need to consider the development of management systems in association with the following:

— ISO/TC 176, *Quality management and quality assurance* — for the quality control of personnel, equipment, facility, work environment, etc. for the processes up to $CO_2$ compression;

— ISO/TC 69, *Applications of statistical methods* and IEC/TC 56, *Dependability* — for reliability and sampling;

— ISO/TC 207, *Environmental management*, ISO/TC 146, *Air quality* and ISO/TC 147, *Water quality* — for environmental management.

Life cycle assessment (LCA) and end-of-life management need to be considered as a management tool of $CO_2$ capture system.

## 6.2 Separation processes

There are three general separation processes of $CO_2$ capture that are integrated into the $CO_2$ capture route (see Reference [3], Figure 3.2). These details are described in subsequent subclauses.

### 6.2.1 Separation with sorbents/solvents

The separation is achieved by passing the $CO_2$-containing gas in intimate contact with a liquid absorbent or solid sorbent that is capable of capturing the $CO_2$. In the general scheme of diagram a) in Figure 3, the sorbent loaded with the captured $CO_2$ is transported to a different vessel, where it releases the $CO_2$ (regeneration) after being heated, after a pressure decrease or after any other change in the conditions around the sorbent. The sorbent resulting after the regeneration step is sent back to capture more $CO_2$ in a cyclic process. In some variants of this scheme the sorbent is a solid and does not circulate between vessels because the sorption and regeneration are achieved by cyclic changes (in pressure or temperature) in the vessel where the sorbent is contained or by a replacement of sorbent inventory. A make-up flow of fresh sorbent is always required to compensate for the natural decay of activity and/or sorbent losses.

The general scheme of Figure 3 governs many important $CO_2$ capture systems, including leading commercial options like chemical absorption and physical absorption and adsorption.


© ISO 2016 – All rights reserved
Documents
Document Sharing Hub
Full document details: PD ISO/TR 27912:2016

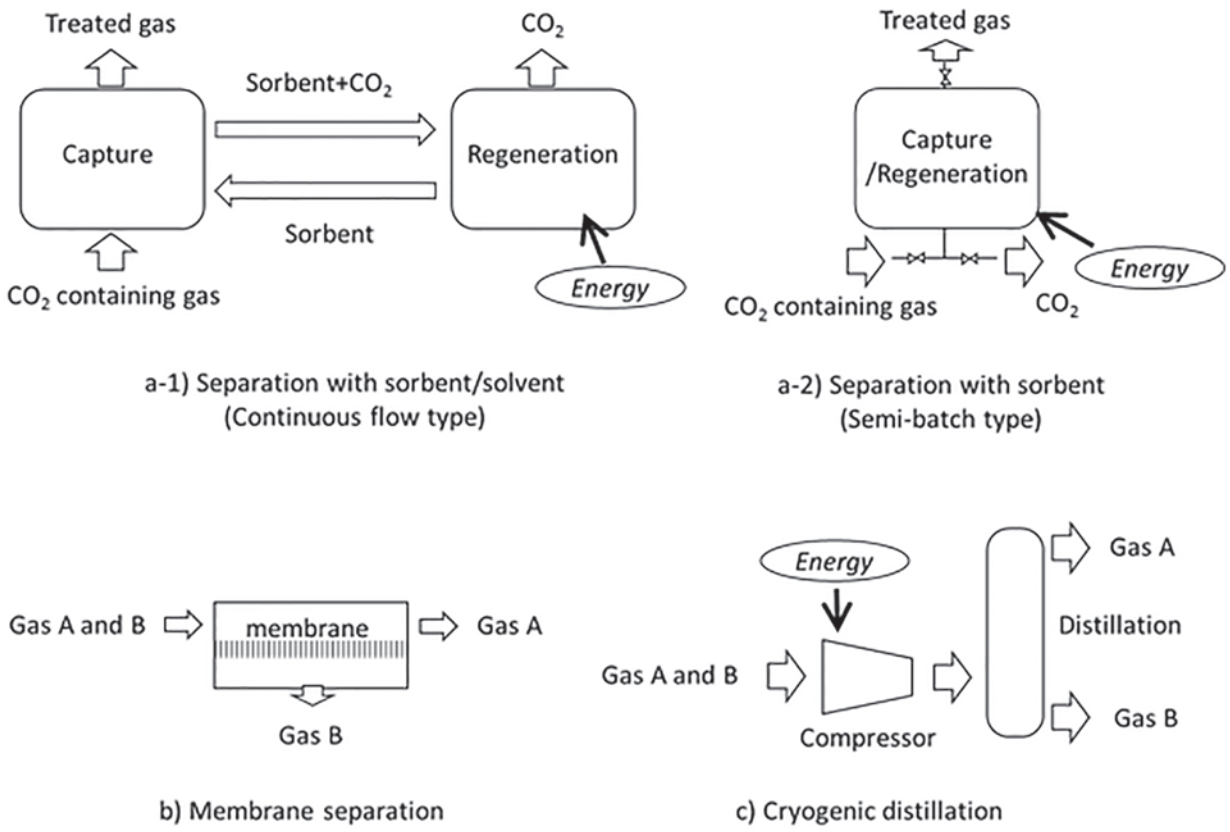


**Figure 3 — General scheme of main separation processes of $CO_2$ capture**

Emerging processes based on new liquid sorbents, or new solid regenerable sorbents are being developed with the aim of overcoming the short comings of the existing systems such as high energy requirement, degradation, high investment, and so on. One common problem of these $CO_2$ capture systems is that the flow of sorbent between the vessels in Figure 3 a) is large because it has to match the huge flow of $CO_2$ being processed in the power plant. Therefore, equipment sizes and the energy required for sorbent regeneration are large and tend to translate into an efficiency penalty and added cost. Also, in systems using expensive sorbent materials there is always a danger of escalating cost related to the purchase of the sorbent and the disposal of sorbent residues. Good sorbent performance under high $CO_2$ loading in many repetitive cycles is obviously a necessary condition in these $CO_2$ capture systems.

Chemical absorption and physical absorption are well-known as $CO_2$ separation process with liquid absorbents.

The chemical absorption uses solvents (absorbents) that react chemically to gas to selectively capture target substances. Materials such as amines and potassium carbonate are used in liquid absorbents. Generally speaking, the chemical absorption method is suited for reducing the concentration of $CO_2$ from tens of percentage points to around 0,1 %, or down to tens of ppm if necessary.

Figure 4 shows a schematic process flow of the chemical absorption method. This approach consists of two major components: the absorber that captures the target substances and the regenerator (stripper) that recycles the absorbent by adding heat to strip the absorbed substances from it. The absorbent circulates between the absorber and regenerator, repeating the absorption and stripping of $CO_2$.

Many of chemical absorption methods utilize heat to regenerate the solvent.

© ISO 2016 – All rights reserved

Documents
Document Sharing Hub
Full document details: PD ISO/TR 27912:2016

A typical technology of the chemical absorption method is called amine absorption, which has such a long history and successful track record that it can be considered a mature technology in the gas refining sector. Many CCS projects use the chemical absorption method for $CO_2$ capture.

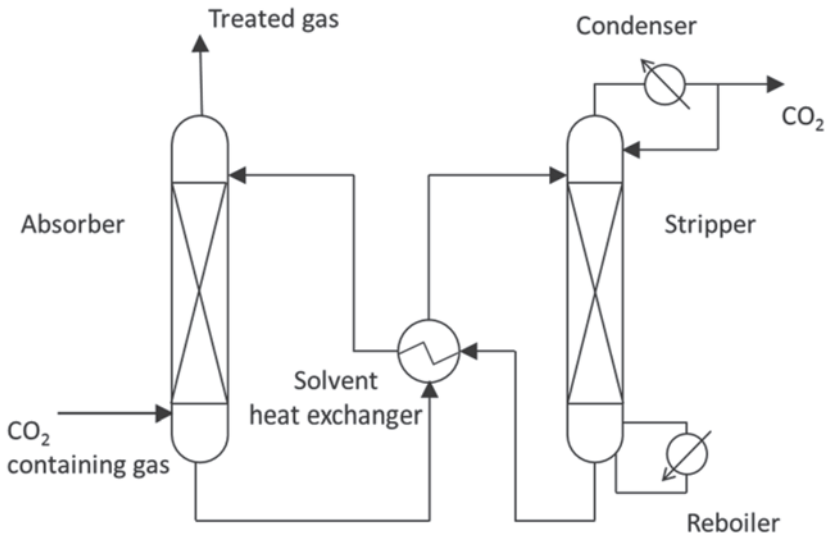


**Figure 4 — Schematic flow of chemical absorption**

Annex A shows several examples of the chemical absorption processes.

The physical absorption takes advantage of differences in solubility (without chemical reactions) into the absorbent to physically capture the target gas components, including $CO_2$. A variety of absorbent products are used, including methanol, propylene glycol and propylene carbonate. This technology is mainly used for the production of syngas-based chemical products as a syngas purification technology and is recently applied to the capture process of IGCC.

A schematic flow chart of the physical absorption process is shown in Figure 5.[8] As with the chemical absorption method, the system consists of a couple of primary components: an absorber, which absorbs target gas components such as $CO_2$, and a flash drum and a regenerator, which reduce the pressure or use heat to strip the absorbed gas compounds from the absorbent to regenerate the absorbent. In the physical absorption method, the solubility of gas components in the absorbent is almost directly proportional to the partial pressure of the vapour phase (Henry's law). In addition, solubility increases as the temperature decreases. Thus, it follows that the higher the operating pressure of the absorber and the lower the operating temperature, the more effective the capture of target gas components.

The physical absorption method of industrial application is also a mature technology with a long history.


© ISO 2016 – All rights reserved
Documents
Document Sharing Hub
Full document details: PD ISO/TR 27912:2016

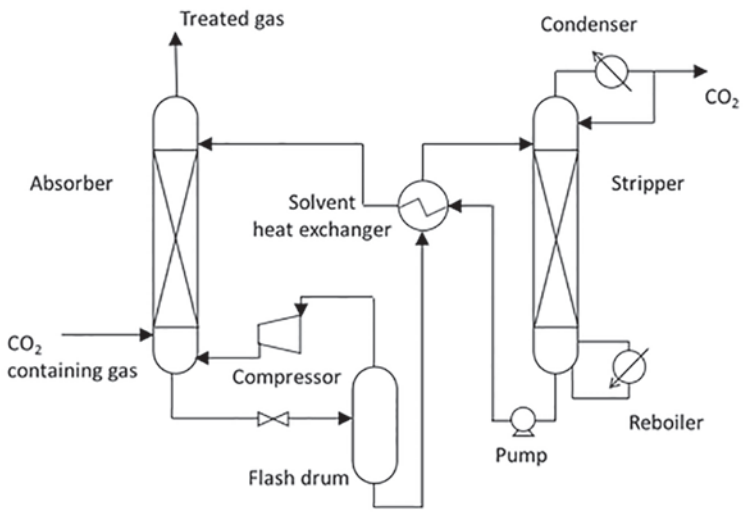


**Figure 5 — Flow chart of the physical absorption method**

Pressure swing physical adsorption and temperature swing chemical adsorption are known as typical $CO_2$ separation process with sorbents. Pressure swing adsorption (or sorption) (PSA or PSS) is a technology in which $CO_2$ is physically adsorbed into the pores of solid sorbent. Once the pressure is lowered, the adsorbed $CO_2$ is released and captured.

Temperature swing adsorption (or sorption) (TSA or TSS) is a technology in which $CO_2$ is chemically adsorbed to solid sorbent.

Promising results have also been reported with $CO_2$ removal from flue gas utilizing a combination of PSA and TSA (PTSA).

### 6.2.2 Separation with membranes

The membrane separation process is a gas separation technology that takes advantage of the differences in the membrane permeability rates among gas components. Because this process separates $CO_2$ by using as a driving force the pressure difference between the $CO_2$ inclusive feed gas side and the permeate gas side of a membrane, very little energy is required to separate $CO_2$ from a high-pressure gas. It is therefore especially effective when the feed gas is at high pressure and contains a high-concentration $CO_2$.

Membranes in Figure 3 b) are specially manufactured materials that allow the selective permeation of a gas through them. The selectivity of the membrane to different gases is intimately related to the nature of the material, but the flow of gas through the membrane is usually driven by the pressure difference across the membrane. Therefore, high-pressure streams are usually preferred for membrane separation. There are many different types of membrane materials (polymeric, metallic, ceramic) that may find application in $CO_2$ capture systems to preferentially separate $H_2$ from a fuel gas stream, $CO_2$ from a range of process streams or $O_2$ from air, with the separated $O_2$ subsequently aiding the production of a highly concentrated $CO_2$ stream. Although membrane separation finds many current commercial applications in industry (some of a large-scale, like $CO_2$ separation from natural gas), they have not yet been applied for the large scale and demanding conditions in terms of reliability and low-cost required for $CO_2$ capture systems. A large worldwide R&D effort is in progress aimed at the manufacture of more suitable membrane materials for $CO_2$ capture in large-scale applications.

A flow chart of the membrane separation process is shown in Figure 6.[9] The $CO_2$ inclusive feed gas is introduced upstream, and $CO_2$ is separated to the lower pressure side through a membrane. To improve the capture rate, a two-stage process recycling permeate gas is adopted.

© ISO 2016 – All rights reserved

Documents
Document Sharing Hub
Full document details: PD ISO/TR 27912:2016

The membrane separation process has been used widely in natural gas refineries where the feed gas contains a high concentration (20 %) of $CO_2$. Research and development on the membrane separation in the IGCC process is also underway.

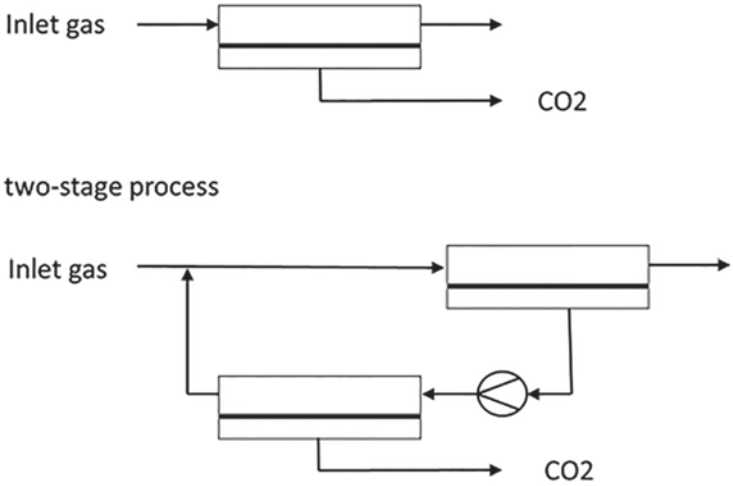


NOTE Top: Single-stage process; Bottom: Two-stage process.

**Figure 6 — Schematic flow of membrane separation process**

### 6.2.3 Separation by cryogenics or flash evaporation

A gas can be made into a liquid by a series of compression, cooling and expansion steps. Once in liquid form, the components of the gas can be separated in a flash or distillation column. In the case of air, this operation is currently carried out commercially on a large scale. Oxygen can be separated from air following the scheme in Figure 3 c) and be used in a range of $CO_2$ capture systems (oxyfuel combustion and pre-combustion capture). Refrigerated separation can also be used to separate $CO_2$ from other gases. It can be used to separate impurities from relatively high purity $CO_2$ streams, for example, from oxyfuel combustion, and also for $CO_2$ removal from natural gas or synthesis gas that has undergone a shift conversion of CO to $CO_2$.

## 7 Post-combustion capture in the power industry

Post-combustion capture (PCC) is an important and fundamental technology in the context of carbon capture and storage (CCS). PCC is the process which separates $CO_2$ from a stream of flue gas after combustion, e.g. in a gas turbine or a coal-fired boiler, as well as raw gas, suitable for PCC, from other industrial sources, e.g. refineries, chemical plants.

Coal is an important low-cost fuel source for generating electricity in various regions of the world, especially developing nations. PCC could prove to be a critical technology for minimizing the $CO_2$ emissions generated by this industry.

### 7.1 System boundary

#### 7.1.1 Boundary with power plant or other process stream (cooling water, steam, flue gas, product $CO_2$)

Figure 7 shows an example of the $CO_2$ capture processes deployed in a thermal power generation plant. [14] Figure 7 can be also applicable to the combustion type steam generation plant. Here, the chemical absorption method is used as an example. The captured $CO_2$, once compressed, is transported using pipelines and mobile carriers, such as ships and trains (not shown in Figure 7). After the $CO_2$ has been removed, the flue gas is released into the atmosphere. The underlying principle for $CO_2$ capture


© ISO 2016 – All rights reserved
Documents
Document Sharing Hub
Full document details: PD ISO/TR 27912:2016

is the exothermic, reversible reaction between a weak acid such as $CO_2$ and a weak base such as an alkanolamine. The flue gas to be treated is contacted by the aqueous solution in an absorbing column or vessel where a soluble salt is formed from the reaction between the $CO_2$ and the base solution.

The flue gas, now depleted of $CO_2$, is then released to the atmosphere. The solution, enriched with the $CO_2$, is sent to a stripping column or vessel (desorber unit) where, by the addition of heat, the salt formation reaction is reversed and the $CO_2$ is released and the base solution is regenerated. The lean base solution is recycled to the absorber unit while the $CO_2$ is made ready for transportation by dehydrating, and if required, deoxygination and compressing it.

As shown in Figure 7, this subclause covers the flue gas path from the outlet of the flue gas desulfurization (FGD) to the outlet of the absorber unit of the $CO_2$ capture plant, the solvent system and the $CO_2$ path up to the outlet of the $CO_2$ compressor, regardless of the $CO_2$ capture process used. The associated utilities, waste water and waste products are shown in Figure 8. In some cases, flue gas pre-treatment is required and this should be included within the boundary of the PCC plant.

To support the PCC process, there are interconnections with the power or utility plants steam, cooling water system and other utilities installed (e.g. demin water, plant drainage, pressurized air and others) as shown in 7.4.2. The waste issue related to absorbent purification and/or recovery or total exchange, if cleaning is not possible, including solid waste, is noted in the following subclauses. Red arrow lines in Figure 7 show the possible integrated heat transferred from a capture and compressor part to power plant using the steam condensate of a power plant steam-water cycle, for example, to improve the power plant efficiency utilizing the waste heat in PCC plant.

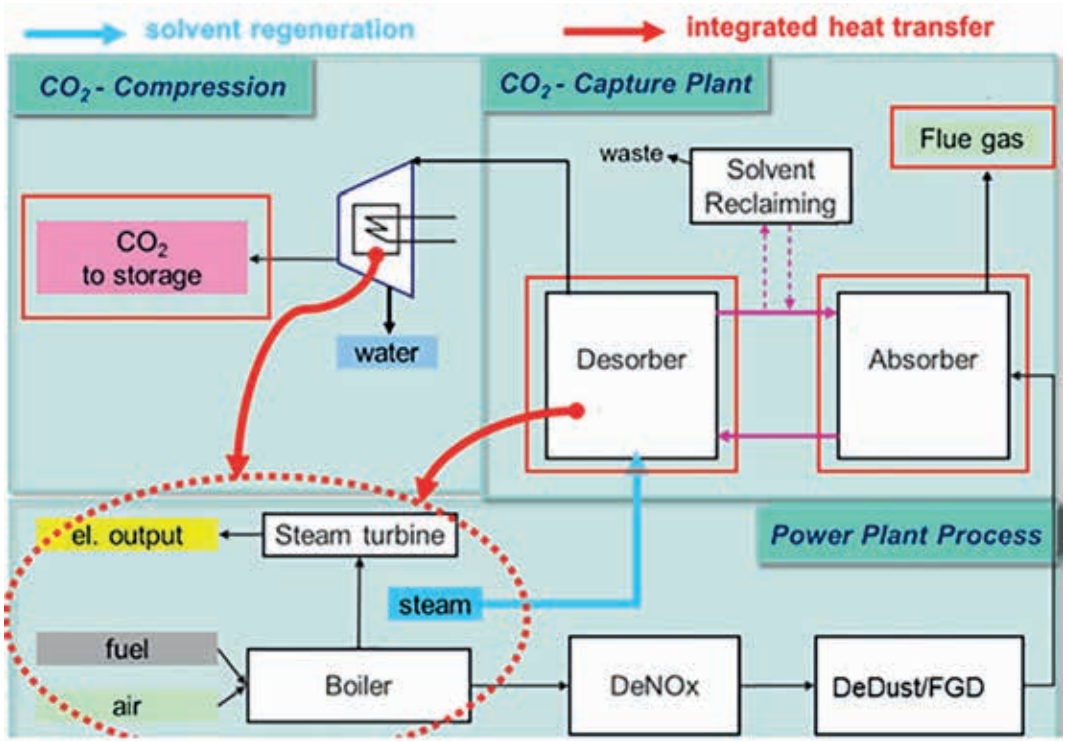


NOTE See Reference [14].

**Figure 7 — Schematic of a pulverized coal-fired power plant with a PCC system and other emission reduction equipment**

Figure 8 shows a generic chemical absorption process in detail.[14] A part or all of the flue gas exhausted from the FGD equipment (only relevant for PCC at hard coal-fired power plants) may be routed through a pre-scrubber to adjust the temperature and humidity of the flue gas to fit the optimal conditions of the absorption process. The pre-scrubber may additionally be used to remove $SO_2$ in the flue gas. The flue gas is then routed to the absorber where $CO_2$ comes in direct contact with the solvent. The effect is that the vast majority of $CO_2$ is absorbed by the solvent and capture rates of 90 % are considered

© ISO 2016 – All rights reserved

AVA Documents Document Sharing Hub
Full document details: PD ISO/TR 27912:2016

typical. After the $CO_2$ is removed, the remaining flue gas is released to the atmosphere. An additional washing step, utilizing a water scrubber installed at the top of the absorber to remove highly volatile substances such as process degradation product and absorbent, may be necessary to ensure that the flue gas released into the atmosphere is in a state that would be acceptable under an Environmental Impact Assessment (EIA). The solvent is returned to the system.

The $CO_2$-loaded (rich) absorbent is forwarded to the stripper (desorber or regenerator). In the desorption process the solvent is heated, by either Low Pressure (LP) or Medium Pressure (MP) steam depending on the process demand, and extracted from the power plant process to release the captured $CO_2$. The $CO_2$-free (lean) solvent is returned to the absorber to absorb $CO_2$ again. At the stripper gas outlet a mixture consisting of saturated $CO_2$ is exhausted. The condensate is collected and sent to both the lean solvent inlet at the absorber and the top part of the stripper.

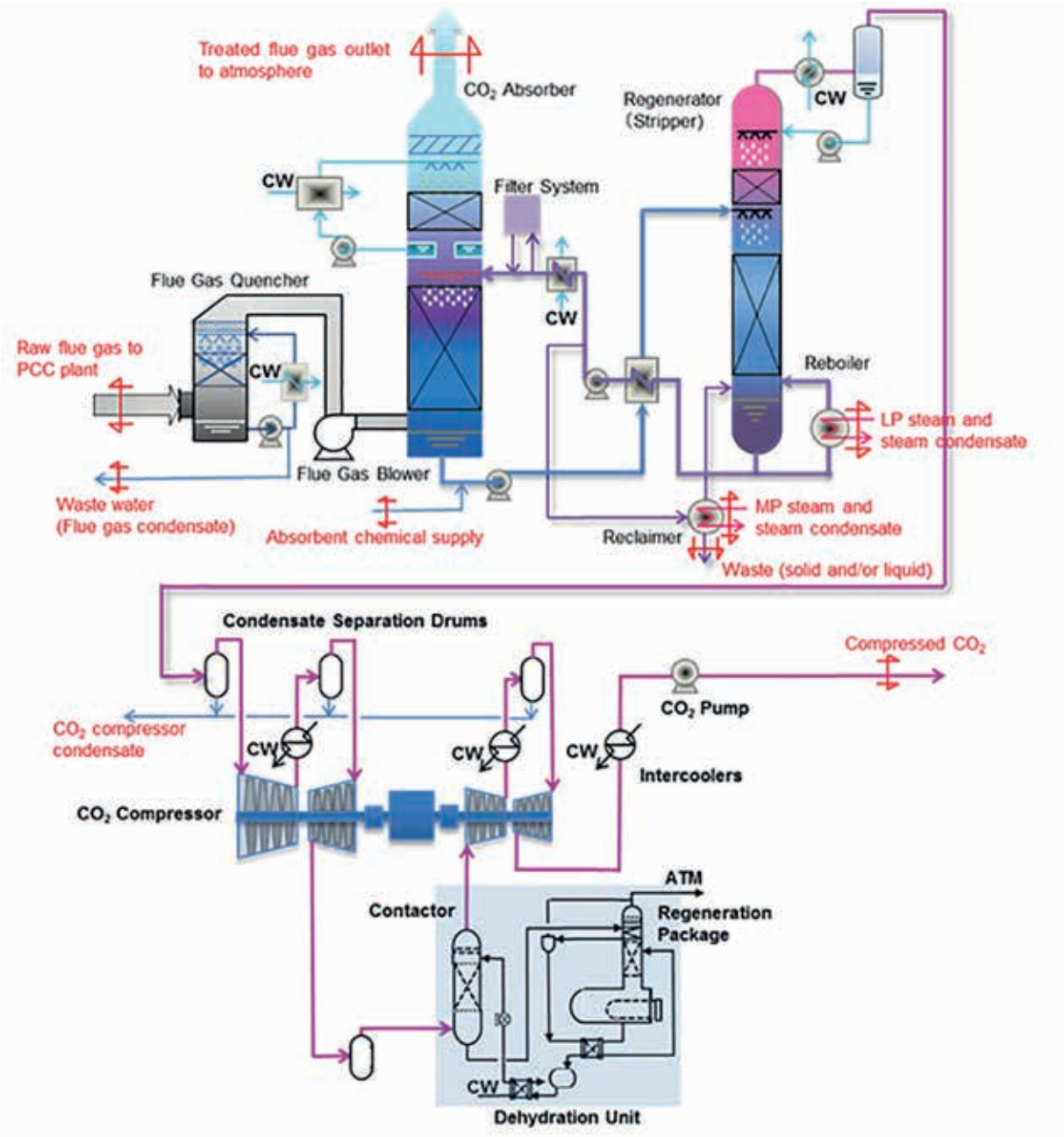


**Figure 8 — Generic PCC process flow scheme**


© ISO 2016 – All rights reserved
Documents
Document Sharing Hub
Full document details: PD ISO/TR 27912:2016

### 7.1.2 Boundary of the PCC plant

Boundary conditions have to be defined for further development of PCC technologies and projects. The following boundaries are considered for a PCC plant:

— raw flue gas to the PCC plant;

— required control and monitor signals to and from a hosted power plant;

— residual flue gas outlet to the atmosphere on top of the absorber or at the inlet flange of a separate stack;

— $CO_2$ outlet of the separate vent stack or top of the $CO_2$ absorber to the atmosphere in case of an unplanned disruption in the transport and/or storage chain of $CO_2$;

— flue gas condensate;

— $CO_2$ compressor condensate;

— demin water, potable water, firefighting water;

— plant drainage;

— pressurized air, inert gas (e.g. nitrogen);

— steam and steam condensate;

— cooling water supply and return;

— power supply;

— by-product and waste generation (solid and/or liquid);

— absorbent chemical supply.

### 7.1.3 Boundary with transport and storage of $CO_2$

The boundary between the PCC plant and the $CO_2$ transport and storage systems is the downstream flange of the $CO_2$ compressor.

To avoid backflow effects and to clearly separate battery limits, an open-close valve should be positioned upstream of the downstream flange.

## 7.2 Technologies, equipment and processes

The following process technologies[18] are currently available or under development for PCC:

— absorption processes based on chemical solvents;

— adsorption processes and membrane processes are described at the beginning of Clause 6.[14]

With respect to absorption processes based on chemical solvents, significant progress has been made in the application of the absorption processes to the flue-gas treatment in coal-fired power plants following the publication of the 2005 report on CCS by Intergovernmental Panel on Climate Change (IPCC).[14] An overview of this technology is included in 7.2.1 to 7.2.3. The detailed processes are described in References [18] and [19] as examples.

### 7.2.1 Chemical absorption process based on (alkanol-) amines (amine process) (A)

General explanation is provided in 7.1.1.

© ISO 2016 – All rights reserved

Documents
Document Sharing Hub
Full document details: PD ISO/TR 27912:2016

According to the International Energy Agency (IEA), notable developments in CCS between 2009 and 2013 include increased experience and confidence with $CO_2$ capture technologies.[18] It is believed that the following factors are partly responsible for these developments on $CO_2$ capture; these statements are partially applicable to all technologies not just amines.

a) Several PCC technologies have been tested at scales on slipstreams of up to 25 MWe, mainly from coal-fired power plants where the number of commercial references of the medium scale in industrial applications increased.[21][22]

b) As a result of improvements achieved in processes and absorbents, significant progress has been made in reducing the amount of heat needed per unit of captured $CO_2$. However, it should be noted that presented values by the technology suppliers are dependent on the specific plant design and operating conditions.[23] In some processes, a base unit of 2,5 GJ per tonne of captured $CO_2$,[23][24] or 1,0 tonne of LP steam per tonne of captured $CO_2$,[25] has already been achieved or projected. Currently, efforts are aimed toward 2,0 GJ per tonne of captured $CO_2$.[28]

c) Efforts have been made to reduce the performance penalty suffered by a power generation plant when the LP steam used in a PCC is supplied by the turbines of the power generation plant as a source of flue gas. Ways to reuse waste heat from both plants and find an optimal arrangement of the LP steam supply system were pursued so as to improve the efficiency of the power generation plant as a whole, including the PCC process.[21]

d) The attention of the EIA has been drawn to the amines contained in the gas streams that are emitted to the atmosphere after being treated by PCC facilities. Initially many research groups, primarily in Norway, have been conducting studies on this subject, resulting in evaluations and improvements of PCC processes such as zero amine emission system[28] to minimize emissions.[21]

e) During the $CO_2$ capture process the chemical absorbents may react with other contents of the flue gas, e.g. oxygen, $NO_x$ and $SO_x$, to form heat stable salts which degrade the solvent performance. This may, over time, reduce $CO_2$ absorption efficiency. To maintain the solvents $CO_2$ capture capability during operation, reclaiming systems are used. The technology used for solvent reclaiming differs with the process and solvent used. Ammonia-based solvents are reported not to degrade in this manner and do not require reclaiming.

### 7.2.2 Chilled ammonia process (CAP) (B)

The Chilled Ammonia Process (CAP) treats flue gas from coal-fired power plants, natural gas combined cycle plants, and refinery cat crackers to capture $CO_2$. CAP consists of seven integrated unit operations.

a) Direct-contact cooler/heater to condition the primary flue gas stream by removing moisture and absorbing $SO_2$ (in DCC1) and to prepare the residual flue gas for atmospheric discharge by heating the gas and absorbing residual ammonia in the flue gas leaving the wash system (in DCH1).

b) Absorber system to capture $CO_2$ by reaction with a circulated ionic ammoniated solution.

c) Ammonia water wash system to capture residual ammonia saturating the flue gas discharged from the absorber system.

d) Regenerator system to release the $CO_2$ from the rich ammoniated solution and return the lean ammoniated solution to the absorber system for reuse.

e) Ammonia stripper system to release $NH_3$ from the wash water and returns it to the absorber system for reuse.

f) Separate stripper system (not described in Figure 9) for ammonia recovery from wash water and to limit salt accumulation (primarily ammonium sulfate) in the ammoniated ionic solution.

g) Compression system to permit transport of the product $CO_2$ for beneficial use or storage in a geologic storage formation.

CAP is illustrated in Figure 9.


© ISO 2016 – All rights reserved
Documents
Document Sharing Hub
Full document details: PD ISO/TR 27912:2016

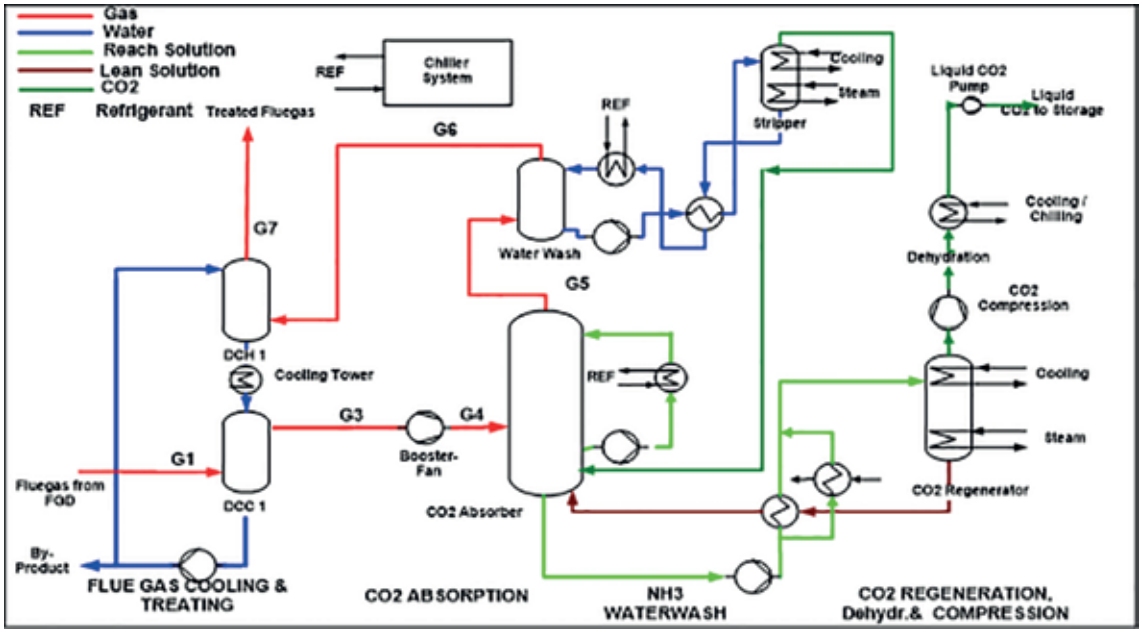


NOTE See Reference [16].

**Figure 9 — Simplified CAP process flow diagram**

Details on the unit operations, including Flue Gas Conditioning, Regeneration, Appendix Stripper, $CO_2$ Dehydration and Compression and Refrigeration Systems should be referred to published information.[16]

### 7.2.3 Amino acid salts (AAS) process (C)

The AAS process uses the aqueous solution of amino acid salts as a solvent. Figure 10 shows the flow chart for PostCap[2)] of Siemens as an example. The equipment configuration is similar to that of a standard amine process.

As the chosen solvent has a very low vapour pressure, it is anticipated that it will cause less emissions from the absorber as the amine system does. In addition, amino acid salts are less susceptible to degradation by oxygen and heat and therefore will have less losses of solvent than the standard amine (MEA) process.[48]

Within the process deposits and solids could theoretically form through precipitation. This is addressed by respective design features and margins. No precipitation was reported during pilot plant operation.[17]

2) PostCap is given for the convenience of users of this document and does not constitute an endorsement by ISO of this process.

© ISO 2016 – All rights reserved

Documents
Document Sharing Hub
Full document details: PD ISO/TR 27912:2016

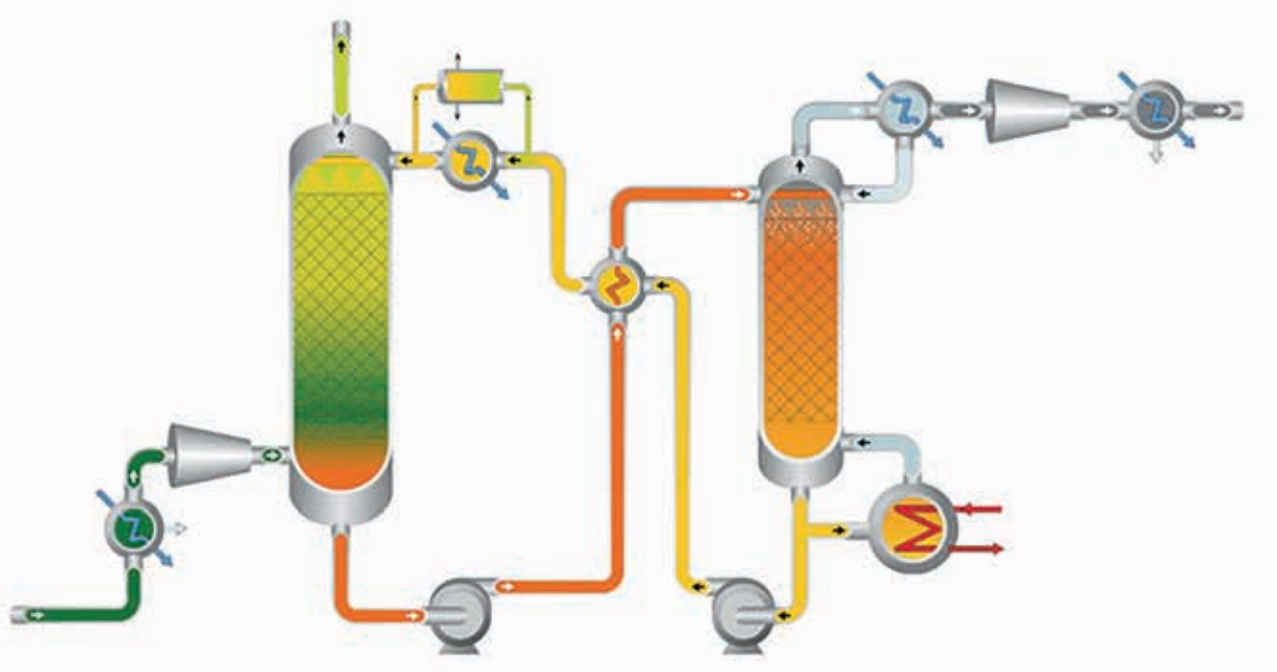

NOTE See Reference [48].

**Figure 10 — Siemens PostCap AAS process**

## 7.3 Carbon dioxide streams, flue gas streams and emissions, process and waste products

### 7.3.1 Flue Gas streams

#### 7.3.1.1 PCC plant with coal-fired boiler and gas-fired combined cycle gas turbine (GTCC) with Heat Recovery Steam Generators (HRSG)

The composition of flue gas that is to be introduced into a PCC plant to capture $CO_2$ is largely a function of the fuel being combusted to generate electricity. In the coal-fired application shown in Figure 11, a Selective Catalytic Reaction (SCR) removes $NO_x$, Electrostatic Precipitator (ESP) removes particulates, and a flue gas desulfurization (FGD) removes $SO_2$.

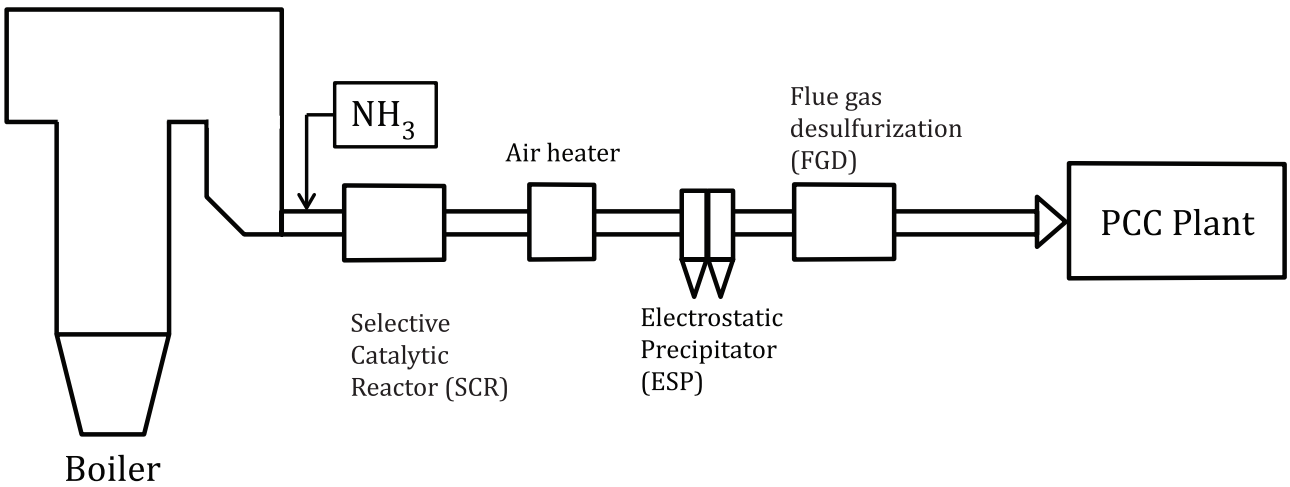


**Figure 11 — Gas phase configuration of PCC plant for the coal-fired power plant**


© ISO 2016 – All rights reserved
Documents
Document Sharing Hub
Full document details: PD ISO/TR 27912:2016

In the natural gas-fired application shown in Figure 12, catalytic beds promote the oxidation of CO into $CO_2$ and $NO_x$ into $N_2$ and $H_2O$. Sulfur compounds are not present in natural gas and as a consequence are not generally found in the flue gas.

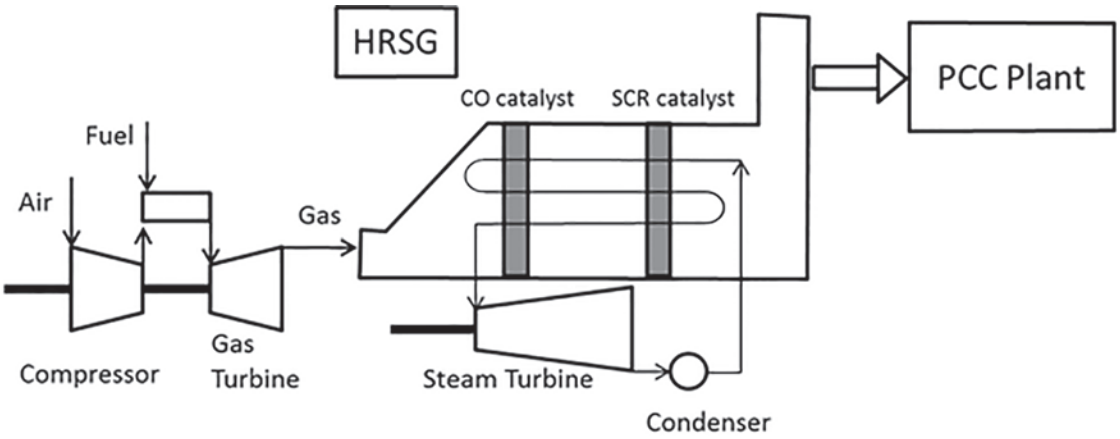


**Figure 12 — Gas phase configuration of PCC plant for GTCC with HRSG**

As the combustion type steam generation plant, the once-through steam generators (OTSG) for *in situ* oil sands production is an important and growing emissions source in the oil and gas industry and the fastest growing source of emissions in Canada. OTSG is very similar to HRSG fed by the hot combustion gas from the furnace or the gas turbine except for the steam generation section where typically the primary stage evaporates the fed water to an intermediate steam quality and the secondary stage completes the evaporation to a required level for injection into the ground without recycle of the generated steam as the feed water after utilization of its energy. Regarding $CO_2$ capture from the flue gas, the same concept mentioned above can be applied to OTSG.

#### 7.3.1.2 Input capture plant

"Flue gas streams" in this context refers to the flue gases that occur as a result of the combustion of fossil fuels and that are emitted from such sources as boilers and gas turbines at thermal power plants and HRSGs at GTCC plants.

Currently specific to plants, FGD, CO/$NO_x$ removal equipment and dust collecting equipment are installed to remove impurities (pollutant) pursuant to the relevant emissions regulations and the flue gases downstream of these purification systems are to be the subject gas streams within this Technical Report.

The properties (composition, temperature and impurities) of flue gas supplied to PCC plant varies significantly depending on the type of fuel used, the power plant type and the its system configuration. Generally further abatement of the pollutants, rather than the emission requirement at the conventional stack outlet, is favourable to ensure conditions which allow an efficient and cost-effective $CO_2$ capture through simplification of the flue gas pre-treatment part or the countermeasures inside the PCC plant, depending on the applied technology.

Particularly in the case of coal, the composition of impurities varies greatly according to its grade and mining location, and this may result in severe impacts related to the flue gas composition depending on the above purification systems performance.

The characteristics of flue gases from power plants are manifested in the flow rate, temperature, gas pressure, and composition (e.g. $N_2$, $O_2$, $CO_2$, $H_2O$, $NO_x$, $SO_x$, $NH_3$, mercury, soot, ash). There could be an obvious impact on the end-of-pipe $CO_2$ capture process design, even when the PCC plant is not installed to treat 100 % of the flue gas.

It is very important to clarify the flue gas properties fed to PCC plant in terms of a proper comparative evaluation of technology as explained in 7.4 and achievement of high reliability as explained in 7.6, as well as fulfillment of emission regulation and waste management explained in 7.3.3 and 7.3.6.

AVA Documents
Document Sharing Hub

© ISO 2016 – All rights reserved


Full document details: PD ISO/TR 27912:2016

Flue gas conditions are a function of fuel type, combustion conditions and pre-existing environmental technologies.

The following are examples of flue gas compositions when natural gas or coal is used as fuel.

Example 1 — Natural gas-fired (B.1)

SINTEF, Emission Compound Toxicity Protocol, P152

Pressure: 1,01 Bar, Temperature: 20 °C to 45 °C (after flue gas quencher), Composition ($N_2$ 76 mol%, $O_2$ 13,8 mol%, $CO_2$ 3,4 mol%, $H_2O$ 6,8 mol%, $NO_x$ 3 ppmv, $NH_3$ 2 ppmv)

Example 2 — Coal-fired (B.2)

CSIRO, process modelling for post combustion capture plant, P91

Temperature: 104,5 °C, Composition ($N_2$ 75,8 vol%, $O_2$ 6,3 vol%, $CO_2$ 10,1 vol%, $H_2O$ 7,8 vol%, $NO_x$ to 150 ppmv, $SO_x$ to 200 ppmv, HCl ppmv)

The important parameters summarized below, which will impact the plant design as explained in the above, should be clarified and will be surveyed in the next step for indication of the typical ranges (minimum to maximum) respective to applied fuel type (coal, gas and LFO) so as to clarify the characteristics depending on the fuel type, including the effect of both combustion condition and existing environmental equipment.

- Flue gas flow rate
- Flue gas temperature
- Flue gas pressure
- Flue gas composition:
  - $O_2$
  - $CO_2$
  - $H_2O$
  - $NO_x$
  - $SO_x$
  - $NH_3$
  - CO
  - mist
  - dust

#### 7.3.1.3 Output capture plant (treated gas)

There are treated flue gases which are discharged to the atmosphere from the PCC plant after impurities have been removed by purification equipment and the amount of $CO_2$ has been captured.

As treated flue gases are released into the atmosphere, there is a need to characterize the discharge in order to meet regulatory and permitting requirements that specify the concentrations of pollutants, including additional absorbent derived substances, to acceptable levels.

Although identified parameters that could impact the compositions of the treated gas should be surveyed if needed in the next step, according to the variety of the inlet flue gas to PCC plant as shown in 7.3.1.2, the properties of flue gases emitted from power plants are varying, as are the properties of treated flue gases. The concentration of $CO_2$ normally gets around 1 % in case of boiler flue gas application, however, this value varies depending on the capture rate of $CO_2$ from the flue gases and


© ISO 2016 – All rights reserved
Documents
Document Sharing Hub
Full document details: PD ISO/TR 27912:2016

both $SO_x$ and the solvent get in the order of ppm as shown in the Examples below. $SO_2$ is easy to be captured, while NO is not possible. Studies are underway to lower the concentrations of absorbent (amines), which is generated in PCC plant, in order to reduce the impact of their emissions.[26]

The parameters listed below, which characterize PCC plant output in the emission sides and have the obvious or possible impact on the plant design as explained in the above, should be clarified in terms of the requirement, if any, and should be surveyed in the next step for indication of the typical range respective to applied fuel type (coal, gas and LFO) so as to clarify the influence of the fuel type including the influence of both combustion condition and existing environmental equipment.

— Outlet gas flow rate

— Outlet gas temperature

— Outlet gas pressure

— Outlet gas composition:

  — $O_2$

  — $CO_2$

  — $H_2O$

  — $NO_x$

  — $SO_x$

  — $NH_3$

  — CO

  — mist

  — dust

  — VOC

  — absorbent

  — absorbent degradation product

  — organic compound

Trace components contained in the gases are discussed in 7.5.

The following are examples of flue gas compositions when natural gas or coal is used as fuel.

Example 1 — Natural Gas-Fired (B.1)

SINTEF, Emission Compound Toxicity Protocol, P152

Pressure: 1,01 Bar, Temperature: 20 °C to 45 °C, Composition ($N_2$ 81,5 mol%, $O_2$ 13,8 mol%, $CO_2$ 0,6 mol%, $H_2O$ 3 mol%, $NO_x$ 2 ppmv to 20 ppmv, $NH_3$ <50 ppmv, amine <5 ppmv)

Example 2 — Coal-fired (B.2)

CSIRO, process modelling for post combustion capture plant, P91

Temperature: 27,65 °C, Composition ($N_2$ 89,2 vol%, $O_2$ 6,8 vol%, $CO_2$ 0,9 vol%, $H_2O$ 3,2 vol%, $NO_x$ approx. 150 ppmv, $SO_x$ <5 ppmv, HCl <5 ppmv, MEA <5 ppmv)

© ISO 2016 – All rights reserved

Documents
Document Sharing Hub
Full document details: PD ISO/TR 27912:2016

### 7.3.2 Composition of carbon dioxide streams

"Carbon dioxide streams" refer to the captured (purified) $CO_2$ gases leaving the regenerator and then compressing the remaining gases. The characteristics of carbon dioxide streams include flow rate, temperature, gas pressure, and composition (e.g. $N_2$, $O_2$, $CO_2$, $H_2O$, $NO_x$, $SO_x$, hydrocarbons, solvent components).

The specifications for the captured (purified) $CO_2$ are different depending on whether high-pressure pipelines or shipping, which requires cooling and liquefaction, is used as the mode of transportation. Therefore, the pressure and temperature follow the specifications set by individual plants. Variation in compression discharge (i.e. battery limits) pressure should meet pipeline requirements. This could be a changing condition depending upon the pipeline system requirements over time. Design consideration for pressure variation is needed.

To prevent equipment damage due to the corrosion of pipes and the solidification of moisture during cooling, the concentrations of water, oxygen, $SO_x$ and $NO_x$ are strictly controlled. To also ensure proper transportation and storage of the $CO_2$, it is necessary to consider the requirements in that respect. Currently, no universally agreed figures of the maximum value of water and oxygen exist and then the requirements also set by individual plants have to be followed utilizing the $CO_2$ purification process described below in the outline, if necessary. $CO_2$ specifications are provided by the pipeline operator.

Oxygen removal is accomplished by catalytic oxidation and is based on the reaction of hydrogen with oxygen with excess hydrogen to the downstream. The process and the respective equipment can be scaled up.

A number of suitable technologies for $CO_2$ dehydration already exist. Glycol-based systems utilizing triethylene glycol (TEG) and solid adsorption systems using the molecular sieve are the most likely technologies for implementation. The process and respective equipment can be scaled up.

There are several liquid agents available for use as a dehydration medium from a variety of different vendors, TEG is well known in the continuous process. In this process, lean TEG fed to the contactor absorbs the moisture in the raw $CO_2$ gas at the surface of the packing inside. Rich TEG with absorbed water is removed from the chimney tray of the contactor to be routed to the regeneration package for purification by the addition of heat and the stripping agent, if required, to produce lean TEG, which achieves the required purity for the dehydration performance and recycles to the contactor after cooling. Considerations in the process as minimum are

a) heat integration between the rich and the lean TEG for heat economy,

b) prevention of TEG entrainment as mist with dried $CO_2$ stream $CO_2$ gas velocity control with demister device in the contactor, and

c) prevention of TEG loss by controlling the operation temperature in the regeneration package.

Relatively small CAPEX/OPEX generally and the robustness to impurities in dehydrate gases are its merits compared with the solid sorbents. However trace TEG enters into the $CO_2$ stream.

Substances that are well suited as solid adsorption agents are inorganic silica gel, activated alumina and the molecular sieves, a material with very small holes of precise and uniform size. At least two fixed bed adsorbers, which are alternatively loaded or regenerated, are required. Solid adsorption systems can be used if significantly lower moisture contents are required.

The normal compression process, such as compressor inter-stage cooling with knockout vessels, reduces the gas equilibrium moisture content and could offload the dehydration unit, resulting in smaller dehydration systems. The $CO_2$ purification process will be operated at the pressure range within the multi-stage $CO_2$ compressor system and located between adequate steps of it as an economic optimization. Using multiple dehydration techniques in series of the system above is possible.

Invariably, the contact with the package vendors or the media vendors is required for the access to the cost and operation information with clarification of the required specification and the compositions of


© ISO 2016 – All rights reserved
Documents
Document Sharing Hub
Full document details: PD ISO/TR 27912:2016

the $CO_2$ stream including impurities. Details on the characteristics of the various drying processes and their integration into the PCC system should be referred to published information.[26]

The important parameters summarized below, which characterize the $CO_2$ stream of PCC plant as explained in the above and have the obvious or possible impact on the plant design, should be clarified in terms of its requirement and should be surveyed in the next step in the typical range respective to applied fuel type (coal, gas and LFO) so as to understand its properties according to the variety of its requirement.

— $CO_2$ flow rate

— $CO_2$ temperature

— $CO_2$ pressure

— $CO_2$ composition:

  — $CO_2$

  — $O_2$

  — $H_2O$

  — $NO_x$

  — $SO_x$

  — $NH_3$

  — VOC

  — absorbent

  — absorbent degradation product

  — organic compound

This list only applies to PCC from combustion sources.

It is very important to highlight the item other-than-normal operation and the related consequences.

The following are examples of $CO_2$ compositions.

Example 1 — Coal-fired (B.2)

CSIRO, process modelling for post combustion capture plant, P91

Temperature: 23,2 °C, Composition ($N_2$ 0 vol%, $O_2$ 0 vol%, $CO_2$ 98,2 vol%, $H_2O$ 1,8 vol%, $NO_x$ approx. 7,4 ppmv, $SO_x$ <5 ppmv, HCl <5 ppmv, MEA <5 ppmv)

Example 2 — Coal-fired (B.3)

GHGT-11, Project Status and Research Plans of 500 TPD $CO_2$ capture and sequestration Demonstration at Alabama Power's Plant Barry, P.6344

Composition ($N_2$ 210 ppm, $O_2$ + Ar 38 ppm, $CO_2$ >99,9 vol%)

Example 3 — Coal-fired (B.4)

GCCSI, ROAD CSS Non Confidential Feed Report, P34

Composition ($N_2$ 1 mol%, $CO_2$ 99,9 mol%, $H_2O$ <30 ppmv)

Example 4 — Coal-fired[3]

IPCC, Special Report on Carbon Dioxide Capture and Storage (2005), P141

For coal-fired plants ($SO_x$ <0,01 vol%, NO <0,01 vol%, $N_2$ + Ar + $O_2$ 0,01 vol%)

For gas-fired plants ($SO_x$ <0,01 vol%, NO <0,01 vol%, $N_2$ + Ar + $O_2$ 0,01 vol%)

AVA Documents
Document Sharing Hub

© ISO 2016 – All rights reserved


Full document details: PD ISO/TR 27912:2016

### 7.3.3 Solvent streams, reclaiming waste products

"Waste products" refer to those substances emitted from a $CO_2$ capture facility other than the aforementioned emissions described under 7.3.1.2 and $CO_2$ streams under 7.3.2. In the following subclauses, the term "solid waste" describes solid, semi-solid, liquids or contained gaseous material. [30] Primary examples include waste products generated when absorbents, adsorbents, or membranes to be used for $CO_2$ capture are recycled and cleaned, and used absorbents, adsorbents, and membranes, and waste detergent discharged from equipment cleaning.

#### 7.3.3.1 Waste products (process effluent)

$CO_2$ capture technologies can be differentiated by the types of effluents they generate. For amine-based technologies, effluents are generated during the treatment of heat stable salts. For ammonia-based technologies, residual ammonia in the treated flue gas is neutralized with sulfuric acid to form ammonium sulfate, which can be utilized as a fertilizer, depending on the impurities concentration.

The function and necessity of a reclaimer in chemical absorption processes is described in 7.2.1.

Absorbents degrade with the elapse of operating time and need to be regenerated on a periodic basis. During this process, a portion of the absorbent, with impurities and degraded substances, is separated and disposed of as reclaimer waste according to federal, state and local regulatory requirements.

One of the following waste treatment methods is selected based on the circumstances at the plant:

a) off-site disposal contracted out to a waste disposal contractor;

b) on-site incineration using an incinerator;

c) on-site crystallization to obtain solid ammonium sulfate which can be sold as fertilizer (for ammonia-based process);

d) off-site shipment of ammonium sulfate liquid as feed for a fertilizer process (for ammonia-based process).

In general, a chemical analysis is performed on waste product (process effluents) to ensure that their range of characterization is consistent with the specification. While the characterization of waste product (process effluents) depends on regulation and recipient requirements, the following basic information is required:

— The physical properties and chemical composition of the waste.

— Waste category (product quality specification) or complete analysis data needed for legal classification of waste, hazardous or non-hazardous. For example, if it has any of the four characteristics (ignitable, corrosive, reactive, toxic) in 40 CFR Part 261, it is classified as a hazardous waste and if a US RCRA listed solvent is used in the process, the waste solvent would be a listed hazardous waste in US. If it displays one or more of the characteristics of hazardous properties (explosive, oxidizes, ignitable, irritant, harmful, toxic, carcinogenic, corrosive, infectious and mutagenic) listed in the Directive 2008/98/EC, Annex III, 12 December 2008, it is classified as hazardous waste in EU.[30]

— Total annual production.

— Selected method of transport for the selected waste disposal method.

— Safety Data Sheets (formerly known as "Material Safety Data Sheet [MSDS]") of the component, if it is available.

In the amine-based technologies, since the waste has typically the heating values within range of those of lignite coals, firing it in the cement kiln or in the on-site pulverized coal power plant is a potential disposal option. However, the addition of the waste to the cement kiln would require additional testing to show that the kiln emissions would still comply with the applicable emission limits while using the waste as fuel. A pulverized coal power plant co-firing the waste would be subject to Commercial


© ISO 2016 – All rights reserved
Documents
Document Sharing Hub
Full document details: PD ISO/TR 27912:2016

and Industrial Solid Waste Incinerator regulation (CISWI), whereas when the waste is considered a hazardous waste, then co-firing this material would be regulated as a hazardous waste combustor under the hazardous waste regulations of 40 CFR Parts 260 through 270 or state equivalent (whichever is more stringent) in the US. In EU co-firing any amount of reclaimer waste in the boiler furnace triggers the Waste Incinerator Directive (WID) without minimum threshold of the co-fired waste amount and is classified as waste incineration.[30]

For amine-based technologies, thermal reclaiming is the most robust solvent reclaiming method and the ion exchange solvent reclaiming or the elecrodialysis solvent reclaiming can be applicable depending on PCC technology. In the thermal reclaiming,[30] chemicals like alkalines such as NaOH may be used to support the regeneration of the solvent, which should be handled with care, and some sodium will be found in the waste product in this case. Residues from the reclaiming process are mostly harmless sulfates produced by neutralization (e.g. $Na_2SO_4$); however, in some cases, toxic degradation products such as nitrosamines and nitramines described in 7.5.3.2 may occur, which should be handled with caution.[47]

While amine and ammonia processes generally evaporate the solvent by use of steam utilizing the generated vapour for stripping of $CO_2$ in the stripper (desorber or regenerator) and disposing of the remaining components, the AAS process uses crystallization to separate the $NO_x$ and $SO_x$ from the solvent.

In these applications, solid waste management will become more important for the large-scale CCS plant. Therefore it is favourable to list up the outline of the composition and properties of the reclaimed waste product in the typical range. However, such information is very difficult to gather in the public domain.

Other waste products, such as the filter elements of the cartridge filter or the activated carbons beds in the absorbent line, which need man-hours for replacement, will need to be considered. In the event where the dust content in the flue gas going into the $CO_2$ absorber is relatively high, like coal-fired flue gas, an automatic filter systems may be necessary. The treatment method should be selected by identifying the composition and amount of waste.

#### 7.3.3.2 Solvent streams

The solvent is pumped around in a loop between the absorber and the desorber. In principle, this is a closed loop, but it is not contained in a complete closed system. Solvent droplets and/or aerosols could leave the system at the absorber to the atmosphere or at the desorber to the $CO_2$ compressor, depending on the process and the demister performance, and have to be considered to minimize emissions and the need for the solvent refill.

Waste generated (process effluent) varies from one $CO_2$ capture technology to another.

The following are examples of the composition of liquid waste generated when amine absorbent is treated for regeneration.

Example 1 — (B.5)

CSIRO, process modelling for amine-based post combustion capture plant, P94

a) Reclaimer discharge (Sample A)
$SO_4$ 4,8 %, $NH_3$ 1 700 ppmw, $NO_3$ 5 300 ppmw, absorbent content 46 %, pH 11,0

b) Reclaimer discharge (Sample B)
$SO_4$ 15,5 %, $NH_3$ 1 100 ppmw, $NO_3$ 7 000 ppmw, absorbent content 33 %, pH 10,0

### 7.3.4 Waste (process) water streams

#### 7.3.4.1 Waste (process) water sources

Water is generally produced when flue gas is cooled. Depending on upstream flue gas treatment, the water collected could be used as make-up water for cooling tower and other use. There are different waste water sources to be found in a PCC plant, water streams that have to be counted as separate

© ISO 2016 – All rights reserved

AVA Documents Document Sharing Hub
Full document details: PD ISO/TR 27912:2016

streams, which could produce waste water to be discharged out of process as a result of condensation and separation occurring at several process steps and related equipment. These include:

— flue gas cooling;

  The flue gas cooler generates flue gas condensate that is affected by the composition of flue gas.

— $CO_2$ dehydration;

— reclaiming;

  Depending on the PCC technology, the waste water as hazardous waste water resulting from the absorption/desorption process may contain traces of Volatile Organic Compounds (VOC) and has to be treated accordingly. Treatment of this amount of water may be necessary.

— others.

Condensation of water occurs also in other parts of the process but the resulting stream is mixed into the solvent stream and therefore not seen as a separate stream to discharge out of the process.

#### 7.3.4.2 Properties of waste (process) water

Waste (process) water treatment should comply with the local waste water effluent regulations and standards of the considered country and region. Characterization of each process water source is the necessary first step in the permitting process.

### 7.3.5 Emission determination and calculation

#### 7.3.5.1 Emissions into the atmosphere

##### 7.3.5.1.1 Emission release

The following ways of emission release are possible:

— Directly releasing the emissions into the atmosphere from PCC plant (top of the $CO_2$ absorber). Reheating to avoid immediate condensation is an option.

— Releasing the emissions using an existing stack, when the $CO_2$ absorber height is not high enough to clear the environmental quality standards in the flue gas temperature and the ground level concentration. In this case, the stack material and the mixing effect with the untreated gas should be checked due to the change in the treated gas properties.

These emissions could include a reuniting of captured $CO_2$ with the flue gas stream or there could be a separate stack for $CO_2$ product discharge.

##### 7.3.5.1.2 Concentrations of emission components

Additional equipment for flue gas treatment to ensure compliance with the emission regulations, e.g. reduction of $NO_x$ or $SO_x$ content or dust in the flue gas, is generally considered as part of the power plant/industrial process. Any treatment of the benchmark flue gas that is required prior to introduction of the flue gas in the PCC facility should be included in the scope of the PCC technology provider. In special cases, e.g. revamp of existing plants, it may also be part of the PCC plant. In the PCC process, $CO_2$ is abated through the $CO_2$ capture process after the flue gas from the boiler/process and is treated by the aforementioned equipment.

For a GTCC power plant, there is also treatment with $NO_x$ removal equipment and occasionally CO removal equipment. Both are catalyst systems not adding secondary pollutants to the flue gas except for $NH_3$ depending on the process used.


© ISO 2016 – All rights reserved
Documents
Document Sharing Hub
Full document details: PD ISO/TR 27912:2016

As a result, the evaluation method of conventional emission in case of PCC plant addition is necessary, taking into account the following positive PCC plant performance on the following flue gas contaminants:

— $NO_x$, $SO_2$, PM removal effect;

— $NO_2$ is partly absorbed but NO is not absorbed (separate measurement to identify NO and $NO_2$ may be necessary); $SO_2$, $SO_3$ absorbed;

— PM removal effect in flue gas cooler;

— $NH_3$ in process (7.2.1, 7.2.2, 7.2.3) removal effect;

— reduction of $CO_2$ flow rate according to the absorption rate as defined in 7.4.2;

— concentrations to be measured as CCS in and CCS out in g/GJ and as CCS outlet, the mass flow leaving the absorber should be evaluated.

Additional emission such as amine/amine degradation products (aldehyde, ammonia, etc.) are discussed in 7.5.

#### 7.3.5.1.3 Emission regulations

In cases where there are no clearly defined emission regulations for PM, $SO_x$ and $NO_x$ leaving a $CO_2$ capture plant, it is suggested to express pollutants in g/GJ (fuel input), due to additional fuel fired. A requirement may be set as the mass of pollutants in total is not higher than that of the entering flue gas.

In addition, other substances related to $CO_2$ capture process is regulated by the existing regulations, such as VOC and ammonia, depending on the region and the technology.

In order to obtain an operating license for a PCC plant (as is generally required for such big plants), an EIA permit is required. General requirements following IFC General EHS guidelines as a minimum requirement should be considered and checked with local EIA regulations.[73]

#### 7.3.5.1.4 Methods of calculating the concentrations of impurities

There have been methods developed for the conventional plants applicable to the measurements of the amounts and compositions of the flue gas, $SO_x$, $NO_x$ and PM. These need to be adapted for the changed flue gas streams ($O_2$-ref. content, etc.).

Issues may be encountered when measuring trace or impurity components that are unique to the PCC system. Research is currently underway to develop simple and accurate measurement methods for such substances that are present as both gas and mist phase.[33][36]

### 7.3.6 Process by-products

Other than pressurized $CO_2$, which may improve the economy depending on the process, there can also be the following by-products produced in the specific process.

Examples of economically interesting by-products of some capture processes are $(NH_4)_2SO_4$ and $K_2SO_4$.

## 7.4 Evaluation procedure for capture performance

$CO_2$ capture from flue gases emitted by fossil fuel power stations, which are large stationary sources, is an effective means of reducing Greenhouse Gases (GHG). However, its economic viability is yet to be established and efforts toward its market application are currently underway. It is noted that mechanisms should be established to facilitate knowledge sharing from early CCS projects.

Based on this philosophy, among a number of project-specific Front End Engineering Design (FEED) of large-scale $CO_2$ capture and compression plant completed in recent years, only a few are in the public domain, including Longannet project of ScottishPower Ltd.,[31] Kingsnorth project of E.ON UK[31] and the Rotterdam Capture and Storage Demonstration Project (ROAD).[32] For FEED studies

© ISO 2016 – All rights reserved

AVA Documents Document Sharing Hub
Full document details: PD ISO/TR 27912:2016

overall capital cost estimation is supported by detailed engineering and provides sufficient accuracy to permit an informed business decision. Caution needs to be exercised in applying these public studies for a specific location and project. Considerable variability can be found in available plot space, utility capacity, current ducting layout and operating objectives.

On the other hand, new regulations, such as Directive 2009/31/EC on the geological storage of carbon dioxide, requires businesses of new large-scale coal-fired power plants (nominal electrical output of 300 MW or more) to conduct studies into presence or absence of appropriate storage site, technical feasibility and cost of transport equipment, technical feasibility and value of additional $CO_2$ capture facility (retrofit). Moreover, this philosophy also supports compliance with the above requirement in order to build a new large-scale coal-fired power plant, since, for supercritical pulverized fuel (PF) plant, the most developed capture retrofit options are post-combustion amine capture and oxyfuel combustion.[33]

Reflecting this background, developing a standard for the performance evaluation method of $CO_2$ capture technologies could help to achieve the following goals of $CO_2$ capture technologies:

— facilitating an objective evaluation of the current state of progress for better understanding and sharing of public knowledge;

— contributing to fair competition without hampering technological advancement;

— promoting the development of widespread application.

### 7.4.1 Clarification of the evaluation basis

In order to carry out a proper comparative evaluation, the evaluation basis and the definition of major performance values and the economic indexes should be clarified, as the reported figures could be site- or technology-specific and should therefore be normalized. In addition, the estimating methodology should be identified and applied uniformly across each plant design.

It is important to establish a common set of start and end points. To start, the flue gas properties such as flow rate, temperature, pressure and the composition (such as $H_2O$, $CO_2$, $O_2$, $SO_x$, $NO_x$, HCl and dust) should be established. Quality of the treated flue gas stream and the $CO_2$ product stream should be defined. Finally, a common list of utilities such as steam, steam condensate, cooling water, power, pressurized air, chemicals and industrial gases should be established. Modifying the basis set of utilities would need to be accommodated within the scope of the $CO_2$ capture system.

In addition, the following performance parameters affect the economic index and should be clarified before evaluation.

### 7.4.2 Basic performance

#### 7.4.2.1 $CO_2$ capture efficiency and total mass of $CO_2$ captured

$CO_2$ capture efficiency ($\eta CO_2$) is defined as follows:

$$\eta CO_2 = (fCO_{2in} - fCO_{2out})/fCO_{2in} \times 100 \quad (1)$$

where

$fCO_{2in,\ out}$ is the mass flow rate of $CO_2$ at $CO_2$ capture plant inlet and outlet (treated flue gas emission side) [in $Nm^3/h$].

$$fCO_{2in} = F_{in} \times CO_{2in}/100\ [Nm^3/h] \quad (2)$$

$$fCO_{2out} = F_{in} \times (1\text{-}CO_{2in}/100)/(1\text{-}CO_{2out}/100) - F \times (1\text{-}CO_{2in}/100)\ [Nm^3/h] \quad (3)$$


© ISO 2016 – All rights reserved
Documents
Document Sharing Hub
Full document details: PD ISO/TR 27912:2016

NOTE Since the outlet gas flow rate changes according to the $CO_2$ removal rate and the inlet gas flow rate, which is always constant, is based on and $fCO_{2out} = F_{out} \times CO_{2out}$ is not applied.

where

$F_{in, out}$ is the flue gas flow rate at $CO_2$ capture plant inlet and outlet (treated flue gas emission side) [$Nm^3$/h-dry];

$CO_{2in}$ is the $CO_2$ concentration in the flue gas at $CO_2$ capture plant inlet [vol%-dry];

$CO_{2out}$ is the $CO_2$ concentration in the flue gas at $CO_2$ capture plant outlet (treated flue gas emission side) [vol%-dry].

Total mass of $CO_2$ captured is defined as follows:

— The total mass of $CO_2$ captured is measured by the flow meter installed in the product $CO_2$ line (before $CO_2$ compression), corrected by the operating condition: ($W_A$).

In the operational data evaluation case, it is also recommended to check the following calculations:

— Total mass of $CO_2$ captured calculated from the absorbent side by the measurement of the dissolved $CO_2$ concentration (g/L) and the flow rate of absorption solvent (both the lean and rich solution): ($W_B$);

— Total mass of $CO_2$ captured calculated from the flue gas side by the balance calculations from the gas side in the above Formula (2) and Formula (3): ($W_C$).

If the difference among the value calculated from ($W_A$), ($W_B$) and ($W_C$) is within the acceptable level, the $CO_2$ balance is maintained correctly. Online analyzers have also been developed for the analysis of absorption solvent and it is possible to quickly perform the operation management.[34]

#### 7.4.2.2 Properties of the captured $CO_2$ at $CO_2$ compression system outlet

##### 7.4.2.2.1 $CO_2$ purity

In the chemical absorption processes, a $CO_2$ concentration (on a dry volumetric basis) of 99 % or more can be achieved.[35]

##### 7.4.2.2.2 Concentrations of $CO_2$ impurities

The captured $CO_2$ contains moisture, oxygen and nitrogen as a by-product of the absorption/desorption process. Quality of $CO_2$ and content of other elements ($H_2O$, $N_2$, $O_2$) has to be defined with regards to transport and storage/usage requirements. Conditions required for the further processing of the $CO_2$ have to be given by the organization responsible for transport and storage. This includes $CO_2$ quality inclusive of allowable pressure content of other elements, e.g. $H_2O$, $N_2$ and $O_2$. If the requirements concerning the moisture and the oxygen concentrations from the transportation side and beyond are too stringent for the specifications to the $CO_2$ capture and compression systems, it may be necessary to install a dehydrator (moisture removal system) and/or an oxygen removal system.

##### 7.4.2.2.3 $CO_2$ compressor system outlet port pressure

Coordination with the $CO_2$ transportation side based on $CO_2$ transportation mode and the actual specifications of the transportation is needed. Interface pressure and temperature of $CO_2$ capture equipment with $CO_2$ compression system is recommended to be defined in the specifications of the $CO_2$ compressor along with impacts on the evaluation of the power consumption of the $CO_2$ compressor.

##### 7.4.2.2.4 Others

Captured $CO_2$ is the end product of the $CO_2$ capture and compression process and it is important to have quality control measures in place. $CO_2$ metering will be required in the system to measure plant

© ISO 2016 – All rights reserved

AVA Documents Document Sharing Hub
Full document details: PD ISO/TR 27912:2016

performance, potentially as a means of demonstrating compliance with the requirement from the transportation and sequestration side and environmental regulations, as a total.

### 7.4.3 Utility consumption

#### 7.4.3.1 LP (-MP) steam

The required steam for the desorption process is delivered by the power or industrial plant. The way the steam is extracted from water steam cycle depends on the local power plant operating conditions. Majority is LP and MP is required for some cases

The LP (-MP) steam required by the PCC plant can be extracted from the water-steam-cycle in the power plant. This requires modifications in the power plant steam cycle and results in a reduction of the power plant efficiency. In terms of power plant performance alone, it is favourable to lower the conditions of the extracted steam as much as possible.[32] In the case that the power plant is mature and the modification is restricted, or there is a necessity to avoid any impact of power plant operation, an additional gas- or oil-fired boiler can be installed with the existing open cycle gas turbine being modified with an HRSG to supply LP steam.[31] The water condensate of the PCC is discharged in the condensate system of the power plant.

#### 7.4.3.2 Power consumption

For rotating machinery like pumps, blowers, compressors, electric motors and/or steam turbines using MP to HP steam can be used as the driver. When the steam turbine drive is selected, the outlet steam is used again as LP steam for PCC plant and its supply source needs to be considered. When an electric motor is used, a power generation penalty as an equivalent to the LP steam consumption in 7.4.3.1 may be incurred, depending on its electrical consumption. In any case, the shaft power consumption varies according to the model and efficiency of the compressor applied and the $CO_2$ product gas interface pressure at $CO_2$ capture unit outlet before $CO_2$ compression unit-inlet.

Ammonia systems typically have higher regeneration pressures than generic amine systems as the vapour pressure of the solvent with higher pressure heating steam for the reboilers, provides higher interface pressure of the captured $CO_2$ at $CO_2$ capture unit outlet. As a result, the design and number of stages of the compressor can vary significantly. In addition, a higher suction pressure reduces power demand.

Therefore, a separate assessment of the impact to the drive energy consumption needs to be performed for $CO_2$ capture plant part and $CO_2$ compression part, respectively.

#### 7.4.3.3 Cooling medium (CW)

In the PCC plant, CW is used at several steps and its required amount depends on the capacity and the efficiency of the process applied. Feed and the return outlet temperatures of CW should be made clear, since it may affect process performance. When once-through water cooling is not viable, evaporative cooling towers or air coolers could be employed. If it is difficult to secure water, an air-cooling fan can be applied. For the chilled ammonia process, a chilled water system is needed to supplement CW to achieve the desired absorption temperatures. This utility is typically supplied by a refrigeration system using anhydrous ammonia as the refrigerant.

In either case, required power consumption used for providing CW or required chilled water should be included in the total power consumption in 7.4.3.2.

Waste heat integration using steam cycle condensate as cooling medium in the PCC coolers result in a reduction of the additional cooling duty associated with the PCC operation.

The steam extracted from the steam cycle for solvent regeneration reduces the cooling requirements of the turbine condenser, therefore offsetting some of the increase in cooling utility required by the PCC plant.


© ISO 2016 – All rights reserved
Documents
Document Sharing Hub
Full document details: PD ISO/TR 27912:2016