PD ISO/TR 7637-5:2016

BSI Standards Publication

Road vehicles — Electrical disturbances from conduction and coupling

Part 5: Enhanced definitions and verification methods for harmonization of pulse generators according to ISO 7637

Documents
Document Sharing Hub

Full document details: PD ISO/TR 7637-5:2016

National foreword

This Published Document is the UK implementation of ISO/TR 7637-5:2016.

The UK participation in its preparation was entrusted to Technical Committee AUE/32, Electrical and electronic components and general system aspects (Road vehicles).

A list of organizations represented on this committee can be obtained on request to its secretary.

This publication does not purport to include all the necessary provisions of a contract. Users are responsible for its correct application.

© The British Standards Institution 2016.
Published by BSI Standards Limited 2016

ISBN 978 0 580 91677 9
ICS 43.040.10

Compliance with a British Standard cannot confer immunity from legal obligations.

This Published Document was published under the authority of the Standards Policy and Strategy Committee on 30 November 2016.

Amendments/corrigenda issued since publication

Date	Text affected

Documents
Document Sharing Hub

Full document details: PD ISO/TR 7637-5:2016

TECHNICAL REPORT

ISO/TR 7637-5

First edition
2016-11-01

Road vehicles — Electrical disturbances from conduction and coupling —

Part 5: Enhanced definitions and verification methods for harmonization of pulse generators according to ISO 7637

Véhicules routiers — Perturbations électriques par conduction et par couplage —

Partie 5: Amélioration des définitions et des méthodes de vérification pour l'harmonisation des générateurs d'impulsions selon la norme ISO 7637

Reference number
ISO/TR 7637-5:2016(E)

Documents
Document Sharing Hub

© ISO 2016

Full document details: PD ISO/TR 7637-5:2016

COPYRIGHT PROTECTED DOCUMENT

© ISO 2016, Published in Switzerland

All rights reserved. Unless otherwise specified, no part of this publication may be reproduced or utilized otherwise in any form or by any means, electronic or mechanical, including photocopying, or posting on the internet or an intranet, without prior written permission. Permission can be requested from either ISO at the address below or ISO's member body in the country of the requester.

ISO copyright office
Ch. de Blandonnet 8 • CP 401
CH-1214 Vernier, Geneva, Switzerland
Tel. +41 22 749 01 11
Fax +41 22 749 09 47
copyright@iso.org
www.iso.org

© ISO 2016 – All rights reserved

Documents
Document Sharing Hub

Full document details: PD ISO/TR 7637-5:2016

Contents

Page

Foreword ..... **iv**
Introduction ..... **v**
1 Scope **1**
2 Normative references **1**
3 Terms and definitions **1**
4 Test pulse generator description **1**
4.1 Existing generator description 1
4.2 Test setups for generator verification 2
4.2.1 General 2
4.2.2 Existing verification setups 2
4.2.3 Extended verification setups 4
4.3 Generator verification 5
4.3.1 General 5
4.3.2 Verification results with existing setup definitions 6
4.3.3 Verification results with extended setup definitions 8
4.4 Verification summary — Missing generator definitions leading to different results 10
5 Proposal of extended definitions for pulse generators and verification methods **11**
5.1 General 11
5.2 Test procedure adaptation 11
5.3 Tolerance definition for generator evaluation 11
5.4 Extended generator definition 11
5.4.1 Decoupling network 11
5.4.2 Coupling network 12
5.5 Generator models for simulation 13
Annex A (informative) **Investigation summary of existing pulse generators** **14**
Bibliography **40**

© ISO 2016 – All rights reserved

Documents
Document Sharing Hub
Full document details: PD ISO/TR 7637-5:2016

Foreword

ISO (the International Organization for Standardization) is a worldwide federation of national standards bodies (ISO member bodies). The work of preparing International Standards is normally carried out through ISO technical committees. Each member body interested in a subject for which a technical committee has been established has the right to be represented on that committee. International organizations, governmental and non-governmental, in liaison with ISO, also take part in the work. ISO collaborates closely with the International Electrotechnical Commission (IEC) on all matters of electrotechnical standardization.

The procedures used to develop this document and those intended for its further maintenance are described in the ISO/IEC Directives, Part 1. In particular the different approval criteria needed for the different types of ISO documents should be noted. This document was drafted in accordance with the editorial rules of the ISO/IEC Directives, Part 2 (see www.iso.org/directives).

Attention is drawn to the possibility that some of the elements of this document may be the subject of patent rights. ISO shall not be held responsible for identifying any or all such patent rights. Details of any patent rights identified during the development of the document will be in the Introduction and/or on the ISO list of patent declarations received (see www.iso.org/patents).

Any trade name used in this document is information given for the convenience of users and does not constitute an endorsement.

For an explanation on the meaning of ISO specific terms and expressions related to conformity assessment, as well as information about ISO's adherence to the World Trade Organization (WTO) principles in the Technical Barriers to Trade (TBT) see the following URL: www.iso.org/iso/foreword.html.

The committee responsible for this document is ISO/TC 22, *Road vehicles*, Subcommittee SC 32, *Electrical and electronic components and general system aspects.*

A list of all parts in the ISO/TR 7637 series can be found on the ISO website.

© ISO 2016 – All rights reserved
Documents
Document Sharing Hub
Full document details: PD ISO/TR 7637-5:2016

Introduction

Pulses in vehicles are generated by different switching events of electrical loads connected to the supply system and coupled via the wiring harness to other components or wires. For test purpose, these pulse phenomena are simulated by pulse generators and coupled via coupling structures to the wiring of a device under test. The test pulses are not real pulses but representatives for the wide range of pulse shapes, amplitudes, source resistances and pulse energy observed in vehicles. The definition of the test pulses and the coupling structures are described in ISO 7637-1, ISO 7637-2 and ISO 7637-3. Based on the standard definition, test equipment has been developed and is commercially available.

The experience with existing test equipment shows some difficulties in terms of result reproducibility for the same DUT dependent on the used generator, which is caused by different realization of test generators coupling and decoupling networks. The intention of this document is to describe the background for these variances and to define methods for harmonization of different generator behaviour.

© ISO 2016 – All rights reserved

Documents
Document Sharing Hub
Full document details: PD ISO/TR 7637-5:2016

TECHNICAL REPORT ISO/TR 7637-5:2016(E)

Road vehicles — Electrical disturbances from conduction and coupling —

Part 5: Enhanced definitions and verification methods for harmonization of pulse generators according to ISO 7637

1 Scope

This document proposes extended definitions for pulse generators and verification methods necessary for harmonization of different generators used for pulse testing in accordance to ISO 7637-2 to ensure the comparability and reproducibility of test results independent on generator types. It presents generator verification results based on current definitions of ISO 7637-2, which shows significant differences depending on the used generator type and explains the technical background of the variances.

This document is based on ISO 7637-1, ISO 7637-2 and ISO 7637-3.

2 Normative references

There are no normative references in this document.

3 Terms and definitions

For the purposes of this document, the following terms and definitions apply.

ISO and IEC maintain terminological databases for use in standardization at the following addresses:

— IEC Electropedia: available at http://www.electropedia.org/

— ISO Online browsing platform: available at http://www.iso.org/obp

3.1
device under test
DUT
one single component or a combination of components as defined to be tested

3.2
ground plane
GP
flat conductive surface whose potential is used as a common reference

Note 1 to entry: Where applicable, the test voltage should also be referenced to the ground plane.

4 Test pulse generator description

4.1 Existing generator description

The main parts of pulse generators are the pulse shaping and coupling networks, (important for generating and applying the test pulses to the DUT) and the decoupling network (important for protecting the connected power supply and effecting the pulse coupling to DUT). A block diagram is shown in Figure 1.

© ISO 2016 – All rights reserved

Documents
Document Sharing Hub
Full document details: PD ISO/TR 7637-5:2016

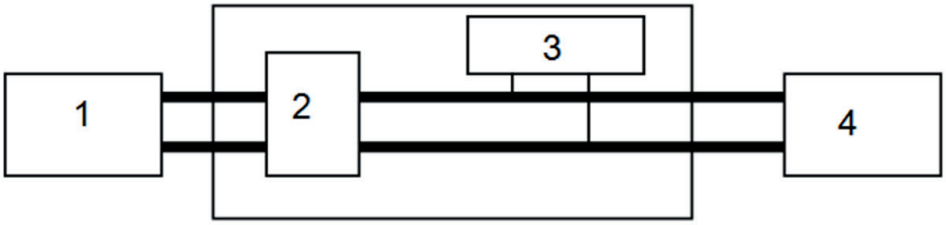

Key

1 power supply
2 decoupling network
3 pulse shaping and coupling network
4 DUT (or verification load)

Figure 1 — Pulse generator principle

The generator description in the current edition of ISO 7637-2 defines only: "The test pulse generator shall be capable of producing the open circuit test pulses described in 5.6.1 to 5.6.4 at the maximum value of $|U_s|$. U_s shall be adjustable within the limits given in Tables 2 to 6. The timing (t) tolerances and internal resistance (R_i) tolerance shall be ±20% unless otherwise specified."

Beyond that, only timing diagrams of the open circuit voltage and the internal resistor are defined.

4.2 Test setups for generator verification

4.2.1 General

The test setup for generator verification is intended to represent typical load conditions applied to the test generator out of the infinite range of test applications. For the different setups, the test generator is expected to show a linear behaviour without resonance effects, under- or over-swing effects. The setup is defined to evaluate relevant data of the test generator with minimal effect to the tolerance scheme of the complete test environment.

4.2.2 Existing verification setups

The actual test setup and generator verification procedure are described in ISO 7637-2:2011, Annex C and limits the verification to open and matched termination with resistive load (load resistor equal to generator internal pulse source impedance) as shown in Table 1 and Figure 2.

The verification defines and requires

— U_a = 0 V,

— open load condition with

  — 10 % magnitude tolerance for pulses 1, 2a, 3a, 3b,

  — 20 % of duration for pulses 1, 2a and 30 % duration for pulses 3a, 3b,

— matched load condition with

  — 20 % tolerance of magnitude for pulses 1, 2a, 3a, 3b,

  — 20 % of duration for pulses 1, 2a and 30 % duration for pulses 3a, 3b,

  — matching load resistor with 1 % tolerance.

© ISO 2016 – All rights reserved
Documents
Document Sharing Hub
Full document details: PD ISO/TR 7637-5:2016

Table 1 — Test pulse 1 parameters

Test pulse 1 (Nominal 12 V system)			
Test pulse 1	**V_s**	**t_r**	**t_d**
No load	-100 V ± 10 V	$\left(1^{0}_{-0,5}\right)$ µs	2 000 µs ± 400 µs
10Ω load	-50 V ± 10 V	—	1 500 µs ± 300 µs
Test pulse 1 (Nominal 24 V system)			
Test pulse 1	**V_s**	**t_r**	**t_d**
No load	-600 V ± 60 V	$\left(3^{0}_{-1,5}\right)$ µs	1 000 µs ± 200 µs
50Ω load	-300 V ± 60 V	—	1 000 µs ± 200 µs

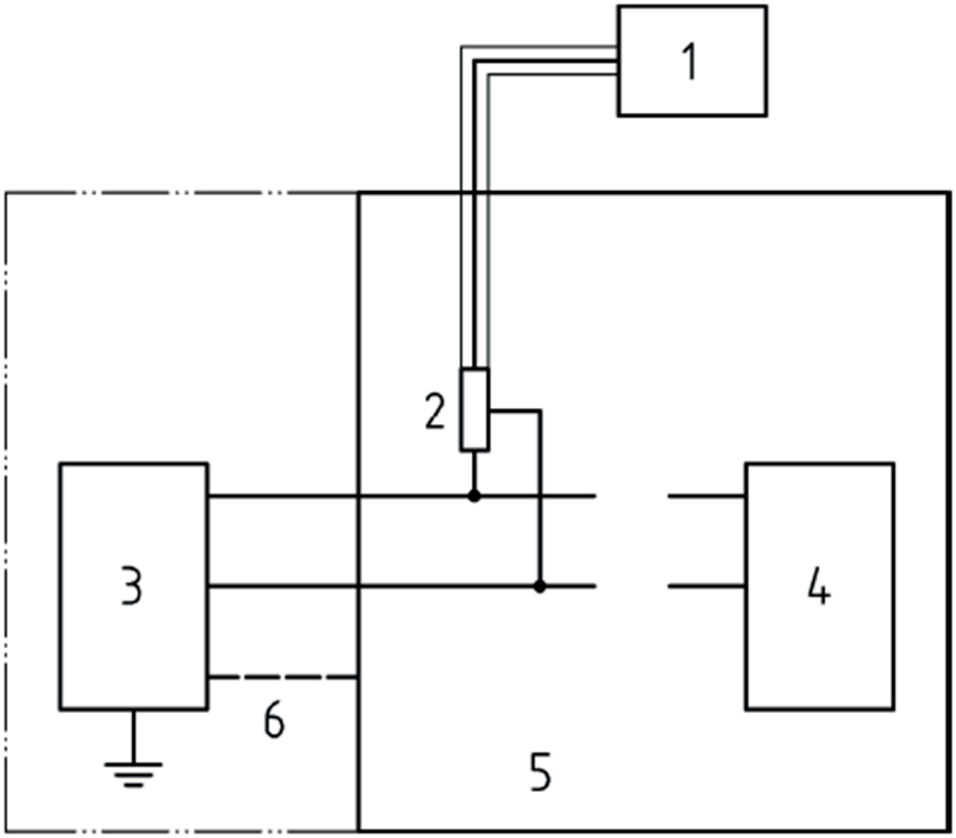

Key

1 oscilloscope or equivalent
2 voltage probe
3 test pulse generator with internal resistance R_i
4 DUT disconnected
5 ground plane
6 ground connection; maximum length for test pulse 3 is 100 mm

Figure 2 — Generator verification setup

In addition, ISO 7637-2:2011, Annex D provides equations for voltage, current and energy calculation of a simple RC discharging network, consisting of a storage capacitor, internal and external resistor.

© ISO 2016 – All rights reserved

Documents
Document Sharing Hub
Full document details: PD ISO/TR 7637-5:2016

With these setup and tolerance definitions, all existing pulse generators can be verified successfully. But the limited definitions and wide tolerances lead to different test results with different test generators and especially under load conditions as described in 4.3.3 and Annex A.

Resonances and nonlinear behaviour of test generators, occurring when a real DUT is connected and powered via the pulse generator, cannot be detected with the existing verification method. Hence, more detailed definitions of pulse shaping, coupling and decoupling network and an enhanced verification definition are necessary.

4.2.3 Extended verification setups

Extended verification setups represent a wider range of application load impedances. These may be expected in real applications and enable to determine the available power. Based on the existing verification setup, an extended set of termination impedances is defined and the pulses are described with closer tolerances.

The following set of verification impedances is defined in Table 2:

— open load conditions;

— matched resistor to generator source impedance;

— low resistive load to simulate applications with high current consumption;

— resistive-capacitive load, to simulate low power loads (e.g. sensors).

This set of termination networks define the relevant values for the frequency spectra of the pulses.

Table 2 — Generator verification condition and load definition

Supply	Load	1	2a	3a	3b
unsupplied	open load	defined	defined	defined	defined
$U_a = 0$ V	matched load	defined	defined	defined	defined
supplied $U_a = U_N$	open load	—	new	tbd	tbd
	matched load	—	new	tbd	tbd
	1Ω	new	new	—	—
	100nF||1kΩ	new	new	—	—

© ISO 2016 – All rights reserved
Documents
Document Sharing Hub
Full document details: PD ISO/TR 7637-5:2016

An enhanced generator verification setup is described in Figure 3.

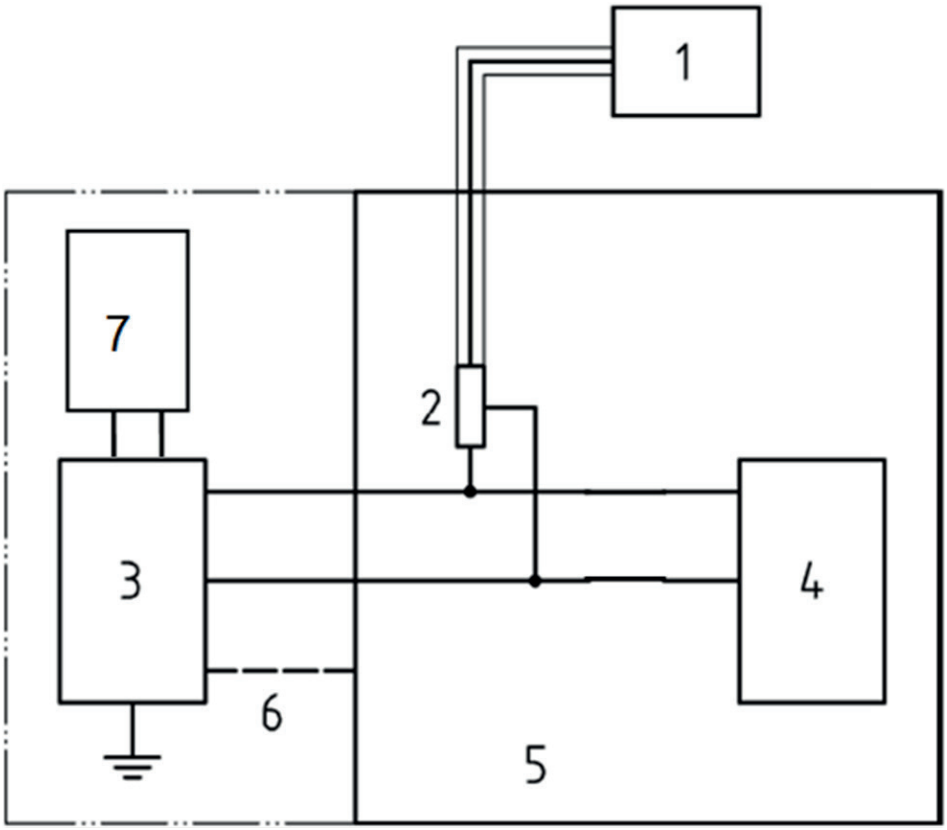

Key

1 oscilloscope or equivalent
2 voltage probe
3 test pulse generator with internal resistance R_i
4 verification load
5 ground plane
6 ground connection; max. length for test pulse 3 is 100 mm
7 battery or power supply

Figure 3 — Enhanced generator verification setup

4.3 Generator verification

4.3.1 General

The performances of 16 pulse generators, specified for pulse immunity test according to ISO 7637, have been verified in order to check the compliance with the standard and the behaviour under real test conditions with supply and typical loads.

In the first step, the test setups for generator verification defined in ISO 7637 were used and the compliance with the specification was checked. In the second step, the generator input was connected to a power supply and the pulse generator output was loaded with different load impedances as given by real devices under test (DUT). In both setups, the pulse waveform and the specified pulse parameters were monitored.

© ISO 2016 – All rights reserved

Documents
Document Sharing Hub
Full document details: PD ISO/TR 7637-5:2016

4.3.2 Verification results with existing setup definitions

For verification of the compliance with the standardized values, the maximal pulse voltage and the pulse width at three different test levels for pulse 1 were measured and the deviation to the standardized value was evaluated. Table 3 shows the verification results.

Table 3 — Generator verification result summary pulse 1

Test-pulse	Supply U_a	Load	Generator voltage U_s	Pulse voltage U_s (min/max)	U_s deviation % **standard** (min/max)	Pulse width t_d (min/max)	t_d deviation % **standard** (min/max)
ISO pulse 1 open-load definition[a]	no	open	−100 V	−100 V ± 10 V	**±10 %**	2 ms ± 0,4 ms	**±20 %**
result	no	open	−50 V	−56 V/−45 V	**5,0 %** (−9,4 %/+12,5 %)	1,8 ms/2,3 ms	**6,1 %** (−10 %/+15 %)
result[a]	no	open	−100 V	−109 V/−93 V	**3,5%** (−6,3 %/+9,2 %)	1,9 ms/2,2 ms	**5,4 %** (−5 %/+10 %)
result	no	open	−150 V	−142 V/−164 V	**3,5 %** (−5,2 %/+9,1 %)	1,9 ms/2,2 ms	**5,5 %** (−5 %/+10 %)
ISO pulse 1 10Ω-load definition[a]	no	10Ω	−100 V	−50 V ± 10 V	**±20 %**	1,5 ms ± 0,3 ms	**±20 %**
result	no	10Ω	−50 V	−25 V/−22 V	**3,3 %** (−5,8 %/+4,6 %)	1,4 ms/1,6 ms	**5 %** (−6,7 %/+6,7 %)
result[a]	no	10Ω	−100 V	−52 V/−46 V	**3,6 %** (−6,8 %/+5,5 %)	1,3 ms/1,5 ms	**4,1 %** (−13,3 %/0 %)
result	no	10Ω	−150 V	−80 V/−70 V	**4,4 %** (−6,9 %/7,5 %)	1,3 ms/1,5 ms	**3,9 %** (−13,3 %/0 %)

[a] Values to be verified according to ISO 7637-2 definition.

The standard deviation of the pulse voltage over all generators for pulse 1 for three levels −50 V, −100 V and −150 V varies between 3,5 % and 5 % for open load conditions. The maximal deviation increases up to 12,5 % at −50 V. The standard deviation of the pulse width over all generators for pulse 1 for three levels −50 V, −100 V and −150 V varies between 5,4 % and 6,1 % for open load conditions. The maximal deviation increases up to 15 % at −50 V. All generators are well within the standardized tolerances (required for −100 V).

The standard deviation of the pulse voltage over all generators for pulse 1 for three levels −50 V, −100 V and −150 V varies between 3,3 % and 4,4 % for 10Ω conditions. The maximal deviation increases up to 7,5 % at −150 V. The standard deviation of the pulse width over all evaluated generators for pulse 1 for three levels −50 V, −100 V and −150 V varies between 3,9 % and 5 % for 10Ω conditions. The maximal deviation increases up to −13,3 % at −100 V. One generator failed the pulse width requirements with −46,7 % and has been excluded from deviation assessment. All generators except one (excluded) are within the standardized tolerances (required for −100 V).

More information about the evaluated pulse parameters and monitored pulse wave forms are given in Annex A.

© ISO 2016 – All rights reserved
Documents
Document Sharing Hub
Full document details: PD ISO/TR 7637-5:2016

For compliance verification of pulse 2a, the maximal pulse voltage and the pulse width at four different test levels were measured. Furthermore, the deviation to the standardized values was evaluated. Table 4 shows the verification results.

Table 4 — Generator verification result summary pulse 2a

Test-pulse	Supply U_a	Load	Generator voltage U_s	Pulse voltage U_s (min/max)	U_s deviation % **standard** (min/max)	Pulse width t_d (min/max)	t_d deviation % **standard** (min/max)
ISO 2a open-load definition[a]	no	open	75 V	75 V ± 7,5 V	±10 %	50 µs ± 10 µs	±20 %
result	no	open	50 V	48 V/51 V	**3,0 %** (−4,0%/+5,6%)	45 µs/58 µs	**6,9 %** (−10,0 %/15,2 %)
result[a]	no	open	75 V	72 V/78 V	**2,9 %** (−3,5 %/+3,9 %)	45 µs/55 µs	**6,6 %** (−10,0 %/10%)
result	no	open	100 V	97 V/101 V	**1,6 %** (−2,9 %/+1,8 %)	45 µs/55 µs	**7,1 %** (−10,0 %/10 %)
result	no	open	125 V	120 V/126 V	**1,6 %** (−3,6 %/1,4 %)	44 µs/56 µs	**8,3 %** (−12 %/12 %)
ISO 2a 2-Ω-load definition[a]	no	2Ω	75 V	37,5 V ±7,5 V	±20 %	12 µs ± 2,4 µs	±20 %
result	no	2Ω	50 V	19 V/26 V	**9,4 %** (−24,8 %/+4,0 %)	11,8 µs/15 µs	**10,6 %** (−1,7 %/25 %)
result[a]	no	2Ω	75 V	33 V/41 V	**8,3 %** (−13 %/+9,2 %)	11,8 µs/14,4 µs	**8,6 %** (−1,7 %/20 %)
result	no	2Ω	100 V	44 V/53 V	**7,0 %** (−11,3 %/+5,8 %)	11,8 µs/14 µs	**7,3 %** (−1,7 %/16,7 %)
result	no	2Ω	125 V	56 V/68 V	**7,7 %** (−10,9 %/+8 %)	11,8 µs/13,7 µs	**6,4 %** (−1,7 %/14,2 %)

[a] Values to be verified according to ISO 7637-2 definition.

The standard deviation of the pulse voltage over all generators for pulse 2a for four levels 50 V, 75 V, 100 V and 125 V varies between 1,6 % and 3 % for open load conditions. The maximal deviation increases up to 5,6 % at 50 V. The standard deviation of the pulse width over all generators for pulse 2a for four levels 50 V, 75 V, 100 V and 125 V varies between 6,6 % and 8,3 % for open load conditions. The maximal deviation increases up to 15,2 % at 50 V. All generators are well within the standardized tolerances (required for 75 V).

The standard deviation of the pulse voltage over all generators for pulse 2a for four levels 50 V, 75 V, 100 V and 125 V varies between 7 % and 9,4 % for 2Ω load conditions. The maximal deviation increases significantly up to 24,8 % at 50 V. The standard deviation of the pulse width over all evaluated generators for pulse 2a for four levels 50 V, 75 V, 100 V and 125 V varies between 6,4 % and 10,6 % for 2Ω load conditions. The maximal deviation increases significantly up to 25 % at 50 V. One generator failed the pulse width requirements with +38,3 % and has been excluded from deviation assessment. All generators except one (excluded) are within the standardized tolerances (required for 75 V).

More information about the evaluated pulse parameters and monitored pulse wave forms are given in Annex A.

© ISO 2016 – All rights reserved

Documents
Document Sharing Hub
Full document details: PD ISO/TR 7637-5:2016

4.3.3 Verification results with extended setup definitions

For verification of the different generator performance for pulse 1 under test conditions with application load impedances the same tests have been performed. The maximal pulse voltage and the pulse width at three different test levels were measured and the deviations to the expected pulse voltage values were evaluated. Two different loads, low resistive load 1Ω and high impedance load 1kΩ//100nF, were used. Table 5 shows the verification results.

Table 5 — Generator extended verification result summary for pulse 1

Test-pulse	Supply U_a	Load	Generator voltage U_s	Pulse target voltage U_s (min/max)	Pulse voltage U_s (min/max)	U_s deviation % **standard** (min/max)
ISO 1 open-load definition	no	open	−100 V	−100 V	−100 V ± 10 V	**±10 %**
ISO 1 10-Ω-load definition	no	10Ω	−100 V	−50 V	−50 V ± 10 V	**±20 %**
result	no	1Ω	−50 V	−4,6 V	−5,6 V/−4,2 V	**9,1 %** (−7,7 % /+24,4 %)
result	no	1Ω	−100 V	−9,1 V	−10,6 V/−8,3 V	**8,1 %** (−8,6 %/+16,8 %)
result	no	1Ω	−150 V	−13,6 V	−25 V/−12,4 V	**23,2 %** (−9,0 %/+83,1 %)
result	no	1kΩ||100nF	−50 V	−49,5 V	−61 V/−45 V	**7,5 %** (−9,6 %/+23,4 %)
result	no	1kΩ||100nF	−100 V	−99 V	−133 V/−92 V	**10,4 %** (−6,8 %/+34,8 %)
result	no	1kΩ||100nF	−150 V	−148 V	−204 V/−140 V	**12,1 %** (−5,9 %/37,4 %)

The standard deviation of the pulse voltage over all generators for pulse 1 for three levels −50 V, −100 V and −150 V varies between 8,1 % and 23,2 % for 1Ω load conditions. But the maximal deviation increases significantly up to 83 % at −150 V.

The standard deviation of the pulse voltage over all generators for pulse 1 for three levels −50 V, −100 V and −150 V varies between 7,5 % and 12,1 % for 1kΩ||100nF load conditions. The maximum deviation is 37,4 % at −150 V.

Although all generators are well within the standardized tolerances under test conditions with application load impedances, the results are spread over a wide range up to 83 % deviation which needs to be solved.

More information about the evaluated pulse parameters and monitored pulse wave forms are given in Annex A.

For verification of the different generator performance for pulse 2a under test conditions with power supply and connected application load impedances the same tests have been performed. The maximal pulse voltage and the pulse width at four different test levels were measured and the deviation to the expected pulse voltage values was evaluated. Four different loads were used (open, match, low resistive load 1Ω and high impedance load 1kΩ//100nF). Table 6 shows the verification results.

© ISO 2016 – All rights reserved
Documents
Document Sharing Hub
Full document details: PD ISO/TR 7637-5:2016