PUBLISHED DOCUMENT

PD ISO/TR 9464:2008

Guidelines for the use of ISO 5167:2003

ICS 17.120.10

NO COPYING WITHOUT BSI PERMISSION EXCEPT AS PERMITTED BY COPYRIGHT LAW

British Standards

Full document details: PD ISO/TR 9464:2008

National foreword

This Published Document is the UK implementation of ISO/TR 9464:2008. It supersedes BS ISO TR 9464:1998, which is withdrawn.

The UK participation in its preparation was entrusted by Technical Committee CPI/30, Measurement of fluid flow in closed conduits, to Subcommittee CPI/30/2, Differential pressure methods.

A list of organizations represented on this committee can be obtained on request to its secretary.

This publication does not purport to include all the necessary provisions of a contract. Users are responsible for its correct application.

This Published Document was published under the authority of the Standards Policy and Strategy Committee on 30 June 2008

© BSI 2008

ISBN 978 0 580 55216 8

Amendments/corrigenda issued since publication

Date	Comments

Documents
Document Sharing Hub

Full document details: PD ISO/TR 9464:2008

TECHNICAL REPORT

ISO/TR 9464

Second edition
2008-05-15

Guidelines for the use of ISO 5167:2003

Lignes directrices pour l'utilisation de l'ISO 5167:2003

Reference number
ISO/TR 9464:2008(E)

Documents
Document Sharing Hub

Full document details: PD ISO/TR 9464:2008

Documents
Document Sharing Hub

Full document details: PD ISO/TR 9464:2008

Contents

Page

Foreword ... iv

Introduction ... v

1 Scope ... 1

2 Normative references ... 1

3 Terms and definitions ... 2

4 How the structure of this guide relates to ISO 5167:2003 (all parts) ... 2

5 Guidance on the use of ISO 5157:2003 (all parts) ... 2
5.1 Guidance specific to the use of ISO 5167-1:2003 ... 2
5.2 Guidance specific to the use of ISO 5167-2:2003 ... 8
5.3 Guidance specific to the use of ISO 5167-3:2003 ... 23
5.4 Guidance specific to the use of ISO 5167-4:2003 ... 24

6 Information of a general nature relevant to the application of ISO 5167:2003 (all parts) ... 25
6.1 Secondary instrumentation ... 25
6.2 Measurement of pressure and differential pressure ... 27
6.3 Measurement of temperature ... 31
6.4 Determination of density ... 35
6.5 Electrical supply and electrical installations ... 40

Annex A (informative) **Principles of measurement and computation** ... 41

Annex B (informative) **Computation of compressibility factor for natural gases** ... 57

Annex C (informative) **Orifice plate assembly** ... 59

Bibliography ... 68

Documents
Document Sharing Hub

Full document details: PD ISO/TR 9464:2008

Foreword

ISO (the International Organization for Standardization) is a worldwide federation of national standards bodies (ISO member bodies). The work of preparing International Standards is normally carried out through ISO technical committees. Each member body interested in a subject for which a technical committee has been established has the right to be represented on that committee. International organizations, governmental and non-governmental, in liaison with ISO, also take part in the work. ISO collaborates closely with the International Electrotechnical Commission (IEC) on all matters of electrotechnical standardization.

International Standards are drafted in accordance with the rules given in the ISO/IEC Directives, Part 2.

The main task of technical committees is to prepare International Standards. Draft International Standards adopted by the technical committees are circulated to the member bodies for voting. Publication as an International Standard requires approval by at least 75 % of the member bodies casting a vote.

In exceptional circumstances, when a technical committee has collected data of a different kind from that which is normally published as an International Standard ("state of the art", for example), it may decide by a simple majority vote of its participating members to publish a Technical Report. A Technical Report is entirely informative in nature and does not have to be reviewed until the data it provides are considered to be no longer valid or useful.

Attention is drawn to the possibility that some of the elements of this document may be the subject of patent rights. ISO shall not be held responsible for identifying any or all such patent rights.

ISO/TR 9464 was prepared by Technical Committee ISO/TC 30, *Measurement of fluid flow in closed conduits*, Subcommittee SC 2, *Pressure differential devices*.

This second edition cancels and replaces the first edition (ISO/TR 9464:1998), which has been technically revised.

Documents
Document Sharing Hub
Full document details: PD ISO/TR 9464:2008

Introduction

The objective of this Technical Report is to assist users of ISO 5167, which was published in 2003 in four parts. Guidance on particular clauses of ISO 5157:2003 is given.

Some clauses of ISO 5167:2003 (parts 1 to 4) are not commented upon and the corresponding clause numbers are therefore omitted from this Technical Report, except when it has been thought to be useful to keep a continuous numbering of paragraphs.

Documents
Document Sharing Hub

Full document details: PD ISO/TR 9464:2008

blank

Documents
Document Sharing Hub

Full document details: PD ISO/TR 9464:2008

Guidelines for the use of ISO 5167:2003

1 Scope

The objective of this Technical Report is to provide guidance on the use of ISO 5167:2003 (all parts). ISO 5167:2003 is an International Standard for flow measurement based on the differential pressure generated by a constriction introduced into a circular conduit (see ISO 5167-1:2003, 5.1). It presents a set of rules and requirements based on theory and experimental work undertaken in the field of flow measurement.

For a more detailed description of the scope, reference should be made to ISO 5167-1:2003, Clause 1. Definitions and symbols applicable to this Technical Report are given in ISO 5167-1:2003, Clauses 3 and 4.

Neither ISO 5167-1:2003 nor this Technical Report give detailed theoretical background, for which reference should be made to any general textbook on fluid flow.

With the application of the rules and requirements set out in ISO 5167-1:2003, it is practicable to achieve flow measurement within an uncertainty of approximately 1 % of the calculated flowrate. The constraints applicable to each of the primary devices described in ISO 5167:2003 (parts 2 to 4) need to be given consideration before determining the most suitable type for a particular application. Parts 2 to 4 can also be used to form the basis for preliminary design of a metering system.

The information necessary for detailed design, manufacture and final check is specified in the clauses and paragraphs of ISO 5167:2003 (parts 2 to 4).

Secondary instrumentation is not covered by ISO 5167-1:2003, but Clause 6 of this Technical Report makes normative reference to ISO 2186.

2 Normative references

The following referenced documents are indispensable for the application of this document. For dated references, only the edition cited applies. For undated references, the latest edition of the referenced document (including any amendments) applies.

ISO 2186, *Fluid flow in closed conduits — Connections for pressure signal transmissions between primary and secondary elements*

ISO/TR 3313:1998, *Measurement of fluid flow in closed conduits — Guidelines on the effects of flow pulsations on flow-measurement instruments*

ISO 4006, *Measurement of fluid flow in closed conduits — Vocabulary and symbols*

ISO 5167-1:2003, *Measurement of fluid flow by means of pressure differential devices inserted in circular cross-section conduits running full — Part 1: General principles and requirements*

ISO 5167-2:2003, *Measurement of fluid flow by means of pressure differential devices inserted in circular cross-section conduits running full — Part 2: Orifice plates*

ISO 5167-3:2003, *Measurement of fluid flow by means of pressure differential devices inserted in circular cross-section conduits running full — Part 3: Nozzles and Venturi nozzles*

Documents
Document Sharing Hub

Full document details: PD ISO/TR 9464:2008

ISO 5167-4:2003, *Measurement of fluid flow by means of pressure differential devices inserted in circular cross-section conduits running full — Part 4: Venturi tubes*

3 Terms and definitions

For the purposes of this document, the terms and definitions given in ISO 4006 apply.

4 How the structure of this guide relates to ISO 5167:2003 (all parts)

Clause 5 of this Technical Report sets out the guidance specific to each of the four parts of ISO 5167:2003:

— 5.1 covers part 1;

— 5.2 covers part 2;

— 5.3 covers part 3;

— 5.4 covers part 4.

Subsequent subclause numbering relates to the clauses in each of the parts. Hence, 5.1.1 covers Clause 1 in part 1; 5.4.3.1.1 covers Subclause 3.1.1 in part 4.

Guidance applicable to all four parts is given in Clause 6.

5 Guidance on the use of ISO 5157:2003 (all parts)

5.1 Guidance specific to the use of ISO 5167-1:2003

5.1.1 Scope

No comments on this clause.

5.1.2 Normative references

No comments on this clause.

5.1.3 Terms and definitions

No comments on this clause.

5.1.4 Symbols and subscripts

No comments on this clause.

5.1.5 Principle of the method of measurement and computation

5.1.5.1 Principle of the method of measurement

No comments on this subclause.

Documents
Document Sharing Hub
Full document details: PD ISO/TR 9464:2008

5.1.5.2 Method of determination of the diameter ratio of the standard primary device

See Annex A of this Technical Report.

5.1.5.3 Computation of flowrate

The equations to be used to determine the flowrate of a measuring system are given in ISO 5167-1:2003, Clause 5. Some results of these calculations will be fixed with installation dimensions and will only need to be computed once. Other calculations will need to be repeated for every flow measurement point. Annex A gives worked examples of the iterative computations shown in ISO 5167-1:2003, Annex A.

5.1.5.4 Determination of density, pressure and temperature

5.1.5.4.1 General

No comments on this subclause.

5.1.5.4.2 Density

For details on density measurement, see 6.4.

For details on density computation, see Annex B of this Technical Report.

5.1.5.4.3 Static pressure

No comments on this subclause.

5.1.5.4.4 Temperature

The computation of temperature decrease resulting from expansion of the fluid through the primary device requires knowledge of the Joule-Thomson coefficient. The coefficient is a function of temperature, pressure and gas composition. The calculation can be carried out using an equation of state (see, in Annex B, the "detailed method" using molar composition analysis) or by the use of an approximation valid for natural gas mixtures that are not too rich, and when p and T are in the range given below. In the last case, the coefficient is a function of p and T alone.

Provided that, in the molar composition of the natural gas, methane is greater than 80 %, the temperature is in the range 0 °C to 100 °C and the absolute static pressure is in the range 100 kPa to 20 MPa (1 bar to 200 bar).

$$\begin{aligned}\mu_{\mathrm{JT}} &= 0{,}35 - 0{,}001\,42t \\ &\quad + \left(0{,}231 - 0{,}002\,94t + 0{,}000\,0136t^2\right)\left(0{,}998 + 0{,}000\,41p - 0{,}000\,111\,5p^2 + 0{,}000\,000\,3p^3\right)\end{aligned} \tag{1}$$

where

μ_{JT} is the Joule-Thomson coefficient, in kelvin per bar (K/bar);

t is the temperature of the fluid, in degrees Celsius (°C);

p is the absolute static pressure of the fluid, in bar.

The uncertainty was determined from the differences between this equation and the Joule-Thomson coefficient of 14 common natural gases and is given by

$$U = 0{,}066\left(1 - \frac{t}{200}\right) \qquad \text{for } p \leqslant 70 \text{ bar (7 MPa)} \tag{2}$$

Documents
Document Sharing Hub

Full document details: PD ISO/TR 9464:2008

and

$$U = 0{,}066\left(1-\frac{t}{200}\right)\left[1-\frac{(290-t)}{4}\left(\frac{1}{70}-\frac{1}{p}\right)\right] \qquad \text{for } p > 70 \text{ bar (7 MPa)} \tag{3}$$

where U is the (expanded) uncertainty in the Joule-Thomson coefficient (K/bar).

NOTE If an orifice plate with $\beta = 0{,}6$ has a differential pressure $\Delta p = 0{,}5$ bar, the uncertainty in the Joule-Thomson coefficient corresponds to an uncertainty in flowrate in the range from 0,001 % to 0,009 %, depending on the temperature, the pressure and the gas composition.

5.1.6 General requirements for the measurements

5.1.6.1 Primary device

5.1.6.1.1 No comments on this subclause.

5.1.6.1.2 No comments on this subclause.

5.1.6.1.3 Table 1, whilst not exhaustive, lists materials most commonly used for the manufacture of primary devices.

Table 1 — Steels commonly used for the manufacture of primary devices

	AISI	BS 970	AFNOR	DIN
Stainless steels	304 316	304-S15 316-S16	Z6CN18-09 Z6CND17-11	1.4301 1.4401
High elastic limit stainless steel	420	420-S37	Z30C13	

Table 2 gives the mean linear expansion coefficient, elasticity moduli and yield stresses for the materials of Table 1 according to their AISI designation.

Table 2 — Characteristics of commonly used steels

AISI designation	Mean linear expansion coefficient between 0 °C and 100 °C K^{-1}	Elasticity modulus Pa	Yield stress Pa
304	17×10^{-6}	193×10^{9}	215×10^{6}
316	16×10^{-6}	193×10^{9}	230×10^{6}
420	10×10^{-6}	200×10^{9}	494×10^{6}

The values given in Table 2 vary with both temperature and the treatment process of the steel. For precise calculations, it is recommended that the data are obtained from the manufacturer.

When the primary device under operating conditions is at a different temperature from the one at which the diameter "d" was determined (this temperature is referred to as the reference or calibration temperature), the expansion or contraction of the primary device should be calculated. The corrected diameter "d" to be used in the computation of diameter ratio and flowrate should be calculated using Equation (4), assuming there is no restraint due to the mounting:

Documents
Document Sharing Hub
Full document details: PD ISO/TR 9464:2008

$$d = d_0[1 + \lambda_d(T - T_0)] \quad (4)$$

where

d is the primary device diameter in flowing conditions;

d_0 is the primary device diameter at reference temperature;

λ_d is the mean linear expansion coefficient of the primary device material;

T is the primary device temperature in flowing conditions;

T_0 is the reference or calibration temperature.

Where automatic temperature correction is not required in the flow computer, the uncertainty for "d" included in the overall uncertainty calculations should be increased for the change in "d" due to temperature variation (see ISO 5167-1:2003, 8.2.2.4). An initial calculation may show that this additional uncertainty is small enough to be considered negligible.

5.1.6.2 Nature of the fluid

No comments on this subclause.

5.1.6.3 Flow conditions

5.1.6.3.1 No comments on this subclause.

5.1.6.3.2 If there is a likelihood of such a change of phase, a way of overcoming the problem is to increase the diameter ratio, so that the differential pressure is reduced.

5.1.6.3.3 No comments on this subclause.

5.1.7 Installation requirements

5.1.7.1 General

The following list of inspection equipment is not exhaustive, but provides a basis for inspection control:

— calipers (thickness, diameters);

— internal micrometer (diameters);

— micrometer (thickness);

— gauge block, feeler gauge (relative position, absolute standard for checking micrometers);

— protractor (angles);

— profile measuring apparatus (edge);

— straight edge rule (flatness);

— three point bore gauge (internal diameter).

Only instruments which may be calibrated to primary standards should be used if optimum accuracy is required.

5.1.7.1.1 No comments on this subclause.

AVA Documents
Document Sharing Hub

Full document details: PD ISO/TR 9464:2008

5.1.7.1.2 No comments on this subclause.

5.1.7.1.3 No comments on this subclause.

5.1.7.1.4 No comments on this subclause.

5.1.7.1.5 No comments on this subclause.

5.1.7.1.6 The requirements in this subclause of ISO 5167-1, where drain or vent holes are located near to the primary device, are illustrated in Figure 1. This figure illustrates the importance of placing the drain or vent hole in the annular chamber where one is used. It should be noted that the location of a drain or vent hole relative to a pressure tapping is of greater importance where there is no annular chamber and the drain or vent hole enters the pipe itself.

It should be realized that the flowing fluid may cause deposition, corrosion or erosion of the inner wall of the pipe. The installation may therefore not conform to the requirements of ISO 5167-1. Internal inspection of the pipe should be carried out at intervals appropriate to the conditions of application.

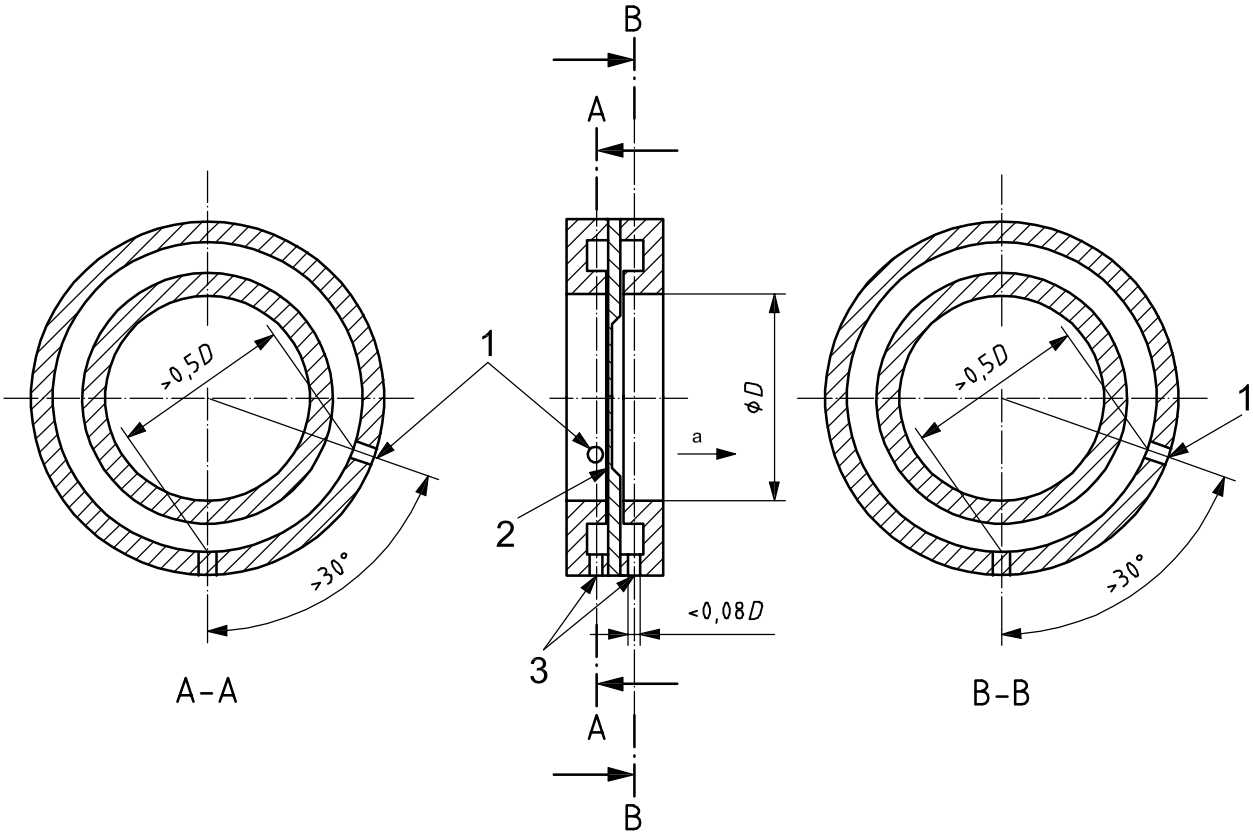

Key

1 pressure tapping

2 orifice plate

3 drain holes and/or vent holes

[a] Flow direction.

Figure 1 — Location of drain holes and/or vent holes

Documents
Document Sharing Hub
Full document details: PD ISO/TR 9464:2008

5.1.7.1.7 This subclause is intended to ensure a reliable measurement of temperature. Although the flowing temperature is not a quantity directly involved in the equation for calculating flowrate, it is an important parameter since it may be used to calculate "d" and "D" plus critical process parameters under flowing conditions.

5.1.7.2 Minimum upstream and downstream straight lengths

5.1.7.2.1 No comments on this subclause.

5.1.7.2.2 When designing a metering pipe installation, it is recommended that the required minimum straight lengths are determined by the maximum diameter ratio that is expected in the life of the installation.

For diameter ratios not actually shown in ISO 5167-2:2003, Table 3, ISO 5167-3:2003, Table 3 or ISO 5167-4:2003, Table 1 but which are inside the limits of the standard, it is reasonable practice to interpolate linearly between the values obtained at the nearest two diameter ratios.

If an orifice meter is designed to measure the flowrate in either direction, the minimum straight lengths of pipe on both sides of the orifice plate should conform to the minimum requirements for upstream and downstream straight lengths as specified in ISO 5167-2:2003, 6.2 and Table 3.

5.1.7.3 General requirement for flow conditions at the primary device

No comments on this subclause.

5.1.7.4 Flow conditioners

It should be noted that although swirl is generally not detectable in visual inspection of the pipe, swirl and asymmetry are sometimes visible in the coating, if present, on an orifice plate. A typical herring bone or chevron pattern that may be seen on a plate that has been in service for some time may indicate that the flow at the orifice plate may be swirling or asymmetrical. Swirl has a greater effect on measurement than any other fluid dynamic mechanism and, although straight lengths of pipe will eliminate swirl, decay may occur very slowly and the swirl may persist over considerable distances. The use of straight lengths of pipe to eliminate swirl is questionable, especially in large pipe sizes, as the decay of induced swirl from common pipe components may not be sufficient to ensure fully developed profiles within the minimum lengths required in the tables.

Flow conditioners are strongly recommended for use downstream of a metering system header and in the following circumstances:

a) where the upstream fittings or arrangement of fittings are not defined in the tables;

b) where a primary device of high β ratio is to be used for a given fitting, a flow conditioner which has passed the compliance test may reduce the upstream length necessary to achieve a good velocity profile, or may improve the velocity profile for a given straight length.

Many new flow conditioners have been developed since the previous edition of ISO 5167 published in 1991, and ISO 5167-1:2003 describes compliance testing for flow conditioners.

Various flow conditioners and straighteners are described in ISO 5167-1:2003, Annex C and ISO 5167-2:2003, Annex B, respectively. Not all of the conditioners described have been subjected to or have necessarily passed the compliance testing procedure.

5.1.8 Uncertainty on the measurement of flowrate

In 1995, ISO in cooperation with BIPM, IEC, IFCC, IUPAC, IUAP and OIML published the *Guide to the expression of uncertainty in measurement* (GUM). The content of this document and ISO 5168 should be taken into account when performing uncertainty analyses.

AVA Documents
Document Sharing Hub

Full document details: PD ISO/TR 9464:2008

Any manufacturer's specification of error should be studied carefully to ensure that the limits of error are known at the measured value concerned. Some points to note include the following:

a) uncertainties are often expressed as a percentage of full scale or range;

b) uncertainties are often defined at specified reference conditions. Additional uncertainties may arise when operating conditions differ from reference conditions.

5.2 Guidance specific to the use of ISO 5167-2:2003

5.2.1 Scope

This part of ISO 5157:2003 is concerned solely with orifice plates and their geometry and installation. It is necessary to read ISO 5167-2 in conjunction with ISO 5167-1.

Orifice plate meters with three arrangements of tappings are described and specified: flange tappings; corner tappings; and D and $D/2$ tappings.

5.2.2 Normative references

No comments on this clause.

5.2.3 Terms, definitions and symbols

No comments on this clause.

5.2.4 Principles of the method of measurement and computation

The density and viscosity of the fluid can be measured (see 6.4) or calculated (see Annex B) from the gas composition. A number of computer programs are available for carrying out the calculation of density and viscosity. In the case of a compressible fluid, the isentropic exponent at working conditions is necessary for the flow calculation and this can be calculated from gas composition.

5.2.5 Orifice plates

5.2.5.1 Description

5.2.5.1.1 General

No comments on this subclause.

5.2.5.1.2 General shape

5.2.5.1.2.1 No comments on this subclause.

5.2.5.1.2.2 No comments on this subclause.

5.2.5.1.2.3 Referring to Annex C, three factors need to be taken into consideration in designing an orifice plate to avoid excessive deformation.

— First, the mounting arrangements should not impose any forces on the orifice plate which would cause the limit of 0,5 % slope given in ISO 5167-2:2003, 5.1.3.1 to be exceeded under the condition of no differential pressure.

— Secondly, the thickness of the plate, E, should be such that, taking account of the modulus of elasticity of the plate material, the differential pressure for the maximum design flowrate should not cause a 1 % slope to be exceeded. When the flowrate is reduced to zero, the plate will return to the original maximum 0,5 % slope.

Documents
Document Sharing Hub
Full document details: PD ISO/TR 9464:2008

— Thirdly, it is necessary to ensure that, if it is possible for differential pressures in excess of those for maximum design flowrate to be applied, plastic buckling (i.e. permanent deformation) will not occur.

For the first point, great care is needed in both the design and manufacture of the mounting arrangements. Single or double chamber mounting devices are satisfactory. When mounting orifice plates between standard flanges, the flanges shall be at 90° ± 1° to the pipe axis. The pipe sections on both sides of the orifice plate should be adequately supported to ensure that no undue strain is placed on the orifice plate.

For the second point, it should be understood that elastic deformation of an orifice plate introduces an error in the flow measurement results. As long as the deformation does not exceed the 1 % slope required by ISO 5167-2:2003, 5.1.2.3, no additional uncertainty will result. Theoretical and experimental research (see Reference [13]) indicates that the maximum change in discharge coefficient for a 1 % slope is 0,2 %. Therefore, orifice plates that conform to the 0,5 % slope specified in ISO 5167-2:2003, 5.1.3.1 can deform an additional 0,5 % slope (i.e. 0,1 % change in discharge coefficient) whilst still conforming to the requirements of this subclause. Table 3 tabulates the plate thickness to plate support diameter ratios (E/D') for various values of β and differential pressures, valid for an orifice plate manufactured from AISI stainless steel 304 or 316, and simply supported at its rim.

Table 3 — Minimum E/D' ratios for orifice plates manufactured in AISI 304 or AISI 316 stainless steel

β	Δp for maximum flowrate kPa						
	10	30	50	75	100	200	400
0,2	0,009	0,011	0,013	0,014	0,014	0,016	0,018
0,3	0,010	0,013	0,015	0,016	0,017	0,020	0,022
0,4	0,010	0,014	0,016	0,018	0,019	0,022	0,025
0,5	0,010	0,014	0,016	0,018	0,020	0,023	0,027
0,6	0,010	0,014	0,016	0,018	0,019	0,023	0,026
0,7	0,009	0,012	0,014	0,016	0,017	0,020	0,024
0,75	0,008	0,011	0,013	0,014	0,016	0,018	0,021

Table 3 is based on the use of Equation (5) when $100\,\Delta q_m/q_m$ is not to exceed 0,1 in magnitude and $E^* = 193 \times 10^9$ Pa:

$$100\frac{\Delta q_m}{q_m} = -\frac{\Delta p}{E^*}\left(\frac{D'}{E}\right)^2\left(a\frac{D'}{E} - b\right) \tag{5}$$

where

$a =$ $\beta(13{,}5 - 15{,}5\beta)$;

$b =$ $117 - 106\,\beta^{1,3}$;

E^* is the modulus of elasticity of plate material;

D' is the plate support diameter (this may differ from pipe bore D);

E is the plate thickness.

For the third point, the maximum differential pressure (which can be greater than Δp in Table 3) that could be applied has to be determined by the designer. This could occur when the metering section is isolated and then vented to reduce it to atmospheric pressure to enable the orifice plate to be removed for inspection, or when pressurizing the metering section before putting into service.

AVA Documents
Document Sharing Hub

Full document details: PD ISO/TR 9464:2008

To avoid plastic deformation (buckling), the orifice plate thickness should be such that:

$$\frac{E}{D'} > \sqrt{\frac{\Delta p}{\sigma_y}\left(0,681 - 0,651\beta\right)} \qquad (6)$$

where

Δp is the maximum differential pressure determined by the designer, in pascals (Pa);

σ_y is the yield stress of the orifice plate material, in pascals (Pa).

NOTE 1 For stainless steel, σ_y = 300 MPa, but it is advisable to use a value of 100 MPa for design purposes.

The thickness of the orifice plate chosen should be whichever is the greater when determined by Equations (5) and (6), but should not exceed the 0,05D required in ISO 5167-2:2003, 5.1.5.3. Should the calculations indicate that the E required is greater than 0,05D, the designer should either reduce Δp or else introduce a stronger material.

EXAMPLE

— Equation (5):

β = 0,2

E^* = 193 GPa

Δp = 50 kPa (0,5 bar)

gives $E/D' > 0,013$ from Equation (5) or Table 3.

— Equation (6):

β = 0,2

σ_y = 300 MPa for stainless steel, but for design purposes it is advisable to use

σ_y = 100 MPa

Δp = 100 kPa (1 bar) (see NOTE 2)

gives $E/D' > 0,023$.

Consequently, E/D' should be at least 0,023.

NOTE 2 100 kPa (1 bar) is the maximum anticipated differential pressure.

5.2.5.1.3 Upstream face A

5.2.5.1.3.1 Table 4 gives values of deflection of the inner edge of the orifice corresponding to the 0,5 % slope for various pipe diameters and diameter ratios, β, assuming the deformation is rectilinear.

Documents
Document Sharing Hub
Full document details: PD ISO/TR 9464:2008

Table 4 — Plate flatness tolerances

β	Nominal diameter of the measuring pipe in millimetres										
	50	100	200	300	400	500	600	700	800	900	1 000
	Maximum deflection h in millimetres for 0,5 % slope										
0,20	0,10	0,20	0,40	0,50	0,80	1,00	1,20	1,40	1,60	1,80	2,00
0,25	0,09	0,19	0,38	0,56	0,75	0,94	1,13	1,31	1,50	1,69	1,88
0,30	0,09	0,18	0,35	0,52	0,70	0,88	1,05	1,22	1,40	1,57	1,75
0,35	0,08	0,16	0,32	0,49	0,65	0,81	0,97	1,14	1,30	1,46	1,63
0,40	0,07	0,15	0,30	0,45	0,60	0,75	0,90	1,05	1,20	1,35	1,50
0,45	0,07	0,14	0,27	0,41	0,55	0,69	0,82	0,96	1,10	1,24	1,38
0,50	0,06	0,13	0,25	0,38	0,50	0,63	0,75	0,88	1,00	1,13	1,25
0,55	0,06	0,11	0,22	0,34	0,45	0,56	0,67	0,79	0,90	1,01	1,13
0,60	0,05	0,10	0,20	0,30	0,40	0,50	0,60	0,70	0,80	0,90	1,00
0,65	0,04	0,09	0,18	0,26	0,35	0,44	0,52	0,61	0,70	0,79	0,88
0,70	0,04	0,07	0,15	0,22	0,30	0,38	0,45	0,52	0,60	0,67	0,75
0,75	0,03	0,06	0,13	0,19	0,25	0,31	0,38	0,44	0,50	0,56	0,63
Reference [13].											

5.2.5.1.3.2 The roughness criterion in this subclause may not be adequate to ensure that the edge sharpness requirements of ISO 5167-2:2003, 5.1.7.2 can be achieved. It is recommended that $Ra \leqslant 10^{-5}d$ should be used. The roughness of the orifice bore should conform to the same criterion.

5.2.5.1.3.3 It is very important that the bevelled side of the plate (if applicable) is located downstream. If the plate is inserted with the bevel upstream, the flowrate can be as much as 20 % underestimated. It should be normal practice to mark the plate, if practical, to indicate the upstream face in such a way that the marking can be seen when the plate is installed.

One common method of identifying the upstream face where the orifice plate is installed between flanges is to install a “paddle plate” where the critical details are engraved on the handle which extends from the flange joint.

In no circumstances should the upstream face of the orifice plate within diameter “D” be indented by any marking.

5.2.5.1.4 Downstream face B

No comments on this subclause.

5.2.5.1.5 Thicknesses E and e

No comments on this subclause.

5.2.5.1.6 Angle of bevel

No comments on this subclause.

5.2.5.1.7 Edges G, H and I

5.2.5.1.7.1 No comments on this subclause.

Documents
Document Sharing Hub

Full document details: PD ISO/TR 9464:2008

5.2.5.1.7.2 The last paragraph of this subclause requires the edge radius to be measured should there be any doubt that it conforms to the requirements of ISO 5167-2:2003, 5.1.7.1 and 5.1.7.2. In those exceptional cases, some suitable techniques are given below.

a) Casting method (see Reference [8])

A replica of the edge is produced using a casting technique. The casting is made in two stages, firstly with a coloured cold-forming plastic which takes up a negative form of the orifice plate edge, and then backed with a semi-transparent epoxy resin taking the place of the orifice plate. The completed casting is cut into two halves exposing the replica of the orifice plate edge, polished and photographed with magnification. The edge condition can then be measured.

b) Lead foil impression method (see Reference [8])

An impression of the edge is made by pressing lead foil, 0,1 mm thick, onto the orifice plate edge. The lead foil is held in a micrometer controlled inspection gauge and pressed onto the edge to give an indentation 0,12 mm deep. The indentation is examined using a projection microscope or similar equipment where the image is magnified, and a tracing of the outline is drawn. The edge condition can then be measured.

c) Paper-recording roughness method (see Figure 2)

This instrument records on a magnified scale the movements of a tracing stylus. To obtain an enlarged reproduction of the orifice edge, the paper speed should be chosen equal to the driving velocity times the magnification of the transverse movements. To establish the correct edge radius of the orifice, the tip radius of the stylus has to be subtracted from the edge radius measured from reproduction and divided by the degree of magnification. It should be noted that the finite dimensions of the stylus, such as tip angle, tip radius and stylus length, can invalidate the measurement or conceal irregularities on the edge.

When edge sharpness is to be measured, it should be in at least 4 positions, equally spaced around the bore. When a defect is visible to the naked eye, the edge sharpness should also be measured at this point.

Interpretation of the edge profile, whatever the reproduction technique, is a matter of expert judgement. Standard machining practice can cause the profile to be very irregular, even though the orifice plate conforms to all the requirements for dimensions and surface roughness.

All edges lying within the shaded region of Figure 3, with an additional margin for surface roughness, can be considered as acceptable. Some surface roughness is tolerable in accordance with ISO 5167-2:2003, 5.1.3.2, but very irregular edges should be rejected.

A simple way of estimating the actual edge radius is by comparing the profile with curves (see examples in Figure 4) reproduced on a transparent foil.

Edge sharpness measurement is a specialist activity. There are laboratories in many countries that are capable of measuring edge sharpness to the standard required in ISO 5167-2:2003, 5.1.7.2. See Reference [8].

Documents
Document Sharing Hub
Full document details: PD ISO/TR 9464:2008

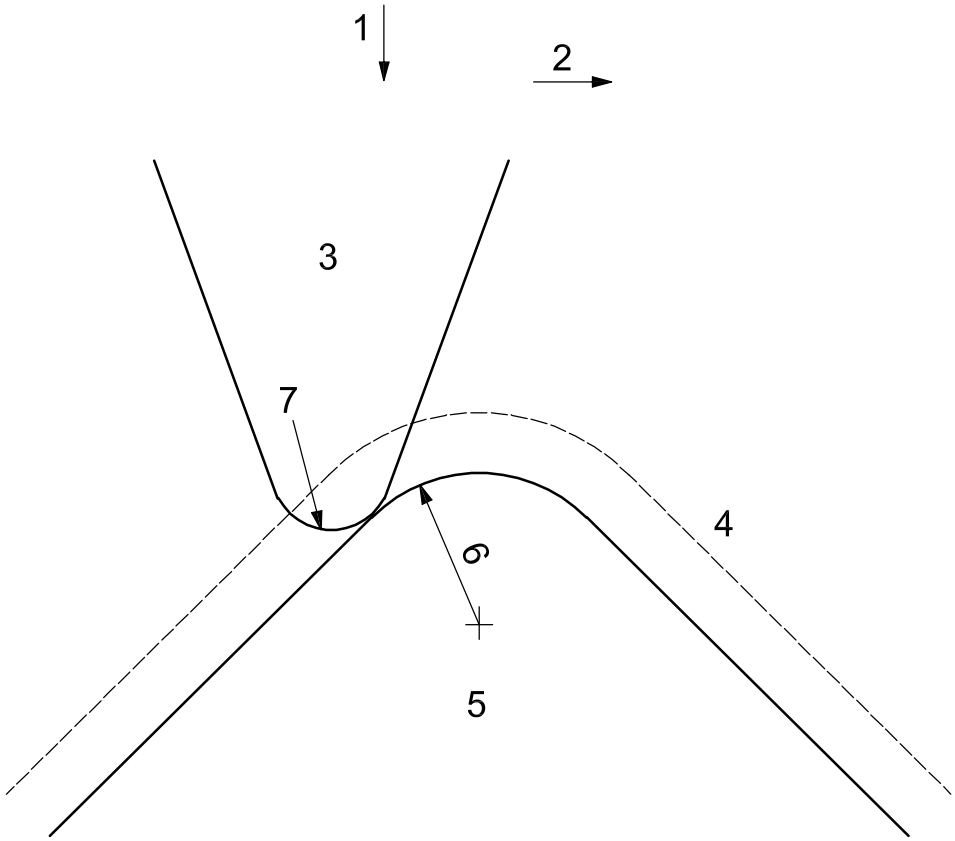

Key

1 recorded movement
2 driving movement
3 stylus
4 traced path
5 square edge
6 R = edge radius
7 radius

Figure 2 — Paper-recording roughness method

Documents
Document Sharing Hub
Full document details: PD ISO/TR 9464:2008

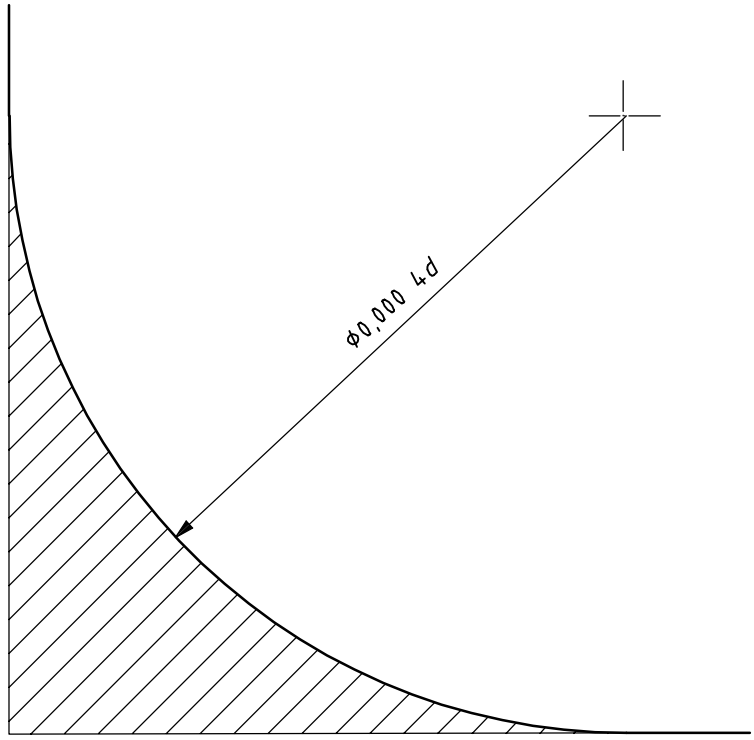

Figure 3 — Maximum edge radius

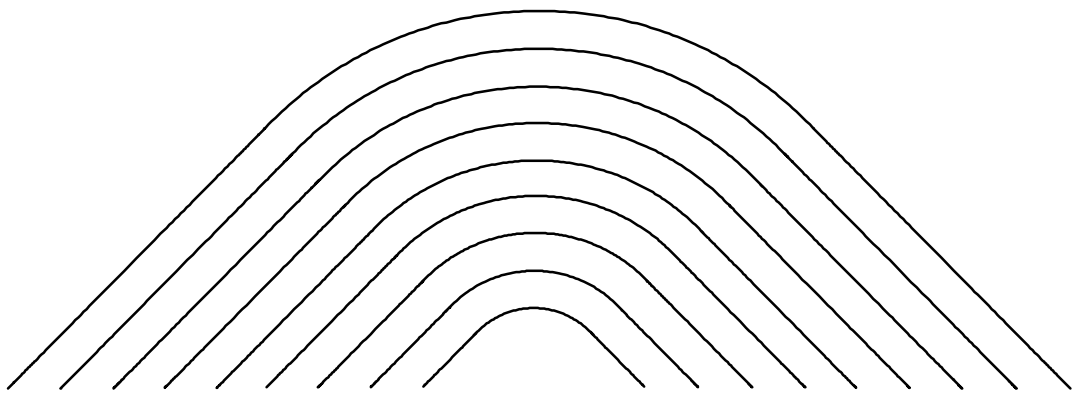

Figure 4 — Edge radius curves

5.2.5.1.7.3 No comments on this subclause.

5.2.5.1.7.4 No comments on this subclause.

5.2.5.1.8 Diameter of orifice, d

5.2.5.1.8.1 Because of the uncertainty of the discharge coefficient, and strict requirements on eccentricity, pipe roughness and upstream straight lengths, the user is advised to remain below a diameter ratio, β, of 0,6 for the most accurate measurements.

5.2.5.1.8.2 No comments on this subclause.

Documents
Document Sharing Hub
Full document details: PD ISO/TR 9464:2008

5.2.5.1.8.3 To enable the requirements of this subclause (i.e. 0,05 % difference) to be shown to have been met, it is necessary to measure or compare with an uncertainty of at most 0,02 %.

5.2.5.1.9 Bidirectional plates

5.2.5.1.9.1 A symmetrical plate is intended to be used for the measurement of a fluid that may flow in either direction. Such a plate should not be bevelled.

The thickness, E, of the plate should then not be greater than 0,02D. As a consequence, symmetrical plates should only be used with low values of differential pressure to prevent deformation (see ISO 5167-2:2003, 5.1.2.3).

5.2.5.1.9.2 The appropriate tappings for the direction of flow should be used.

5.2.5.1.10 Material and manufacture

Subclause 5.1.6.1.3 gives some information on the most commonly used materials and their characteristics.

5.2.5.2 Pressure tappings

This subclause means that pressure tappings have to be installed as follows: at least one upstream tapping and one downstream tapping of the same type, i.e. D and D/2, flange or corner (see ISO 5167-2:2003, 5.2.1). Tappings of several types may be installed at the same location. In such cases, each type of tapping (each "set") will be totally independent from the others: the various sets should not interfere in any way and failure to comply with this will result in an inaccurate measurement.

This implies that, on the same side of the orifice plate, several tappings should not lie on the same axial plane (see Figure 5). Moreover, if they are of different types (e.g. flange and D and D/2), they should be offset by at least 30°. If they are of the same type (e.g. all flange), then no guidance on the acceptable offset in terms of angle is given. No tappings should affect the readings of any other tappings.

Documents
Document Sharing Hub

Full document details: PD ISO/TR 9464:2008

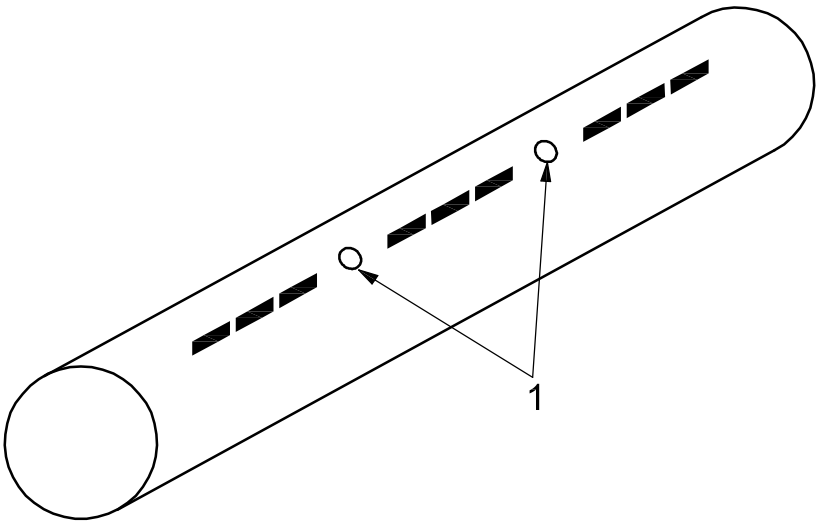

a) Example of incorrect positioning

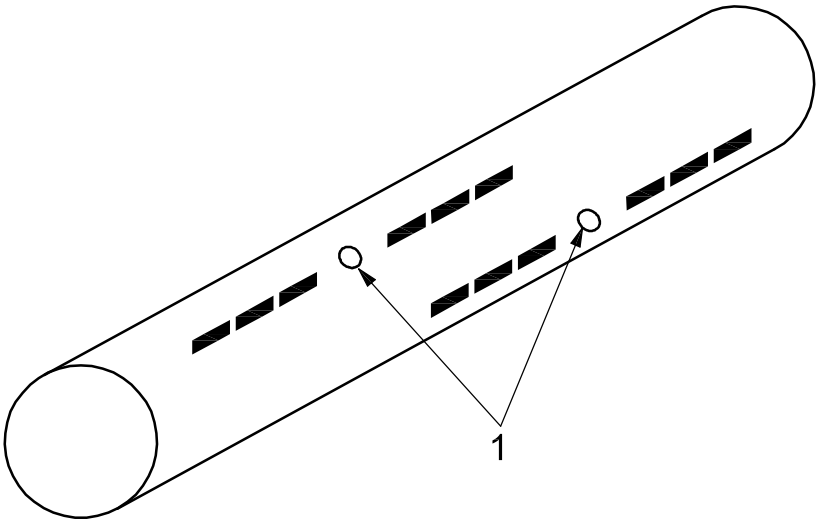

b) Example of correct positioning

Key

1 pressure tappings

Figure 5 — Relative position of pressure tappings of different types

5.2.5.3 Coefficients and corresponding uncertainties of orifice plates

No comments on this subclause.

5.2.5.4 Pressure loss, $\Delta\varpi$

Figure 5 in ISO 5167-2:2003 does not take account of frictional pressure losses in the pipe.

ΔT, as shown, is appropriate for a gas metering system.

Documents
Document Sharing Hub
Full document details: PD ISO/TR 9464:2008