PD ISO/TR 9464:2023

BSI Standards Publication

Guidelines for the use of ISO 5167:2022

Documents
Document Sharing Hub

Full document details: PD ISO/TR 9464:2023

National foreword

This Published Document is the UK implementation of ISO/TR 9464:2023. It supersedes PD ISO/TR 9464:2008, which is withdrawn.

The UK participation in its preparation was entrusted to Technical Committee CPI/30/2, Differential pressure methods.

A list of organizations represented on this committee can be obtained on request to its committee manager.

Contractual and legal considerations

This publication has been prepared in good faith, however no representation, warranty, assurance or undertaking (express or implied) is or will be made, and no responsibility or liability is or will be accepted by BSI in relation to the adequacy, accuracy, completeness or reasonableness of this publication. All and any such responsibility and liability is expressly disclaimed to the full extent permitted by the law.

This publication is provided as is, and is to be used at the recipient's own risk.

The recipient is advised to consider seeking professional guidance with respect to its use of this publication.

This publication is not intended to constitute a contract. Users are responsible for its correct application.

This publication is not to be regarded as a British Standard.

© The British Standards Institution 2023
Published by BSI Standards Limited 2023

ISBN 978 0 539 24466 3

ICS 17.120.10

Compliance with a Published Document cannot confer immunity from legal obligations.

This Published Document was published under the authority of the Standards Policy and Strategy Committee on 30 September 2023.

Amendments/corrigenda issued since publication

Date	Text affected

Documents
Document Sharing Hub

Full document details: PD ISO/TR 9464:2023

TECHNICAL REPORT

ISO/TR 9464

Third edition
2023-09

Guidelines for the use of ISO 5167:2022

Lignes directrices pour l'utilisation de l'ISO 5167:2022

Reference number
ISO/TR 9464:2023(E)

Documents
Document Sharing Hub
© ISO 2023

Full document details: PD ISO/TR 9464:2023

COPYRIGHT PROTECTED DOCUMENT

© ISO 2023

All rights reserved. Unless otherwise specified, or required in the context of its implementation, no part of this publication may be reproduced or utilized otherwise in any form or by any means, electronic or mechanical, including photocopying, or posting on the internet or an intranet, without prior written permission. Permission can be requested from either ISO at the address below or ISO's member body in the country of the requester.

ISO copyright office
CP 401 • Ch. de Blandonnet 8
CH-1214 Vernier, Geneva
Phone: +41 22 749 01 11
Email: copyright@iso.org
Website: www.iso.org

Published in Switzerland

© ISO 2023 – All rights reserved

Documents
Document Sharing Hub

Full document details: PD ISO/TR 9464:2023

Contents

Page

Foreword ... **v**
Introduction ... **vi**
1 Scope ... **1**
2 Normative references ... **1**
3 Terms and definitions ... **1**
4 How the structure of this guide relates to the ISO 5167:2022 series ... **1**
5 Guidance on the use of the ISO 5167:2022 series ... **2**
5.1 Guidance specific to the use of ISO 5167-1:2022 ... 2
5.1.1 Scope ... 2
5.1.2 Normative references ... 2
5.1.3 Terms and definitions ... 2
5.1.4 Symbols and subscripts ... 2
5.1.5 Principle of the method of measurement and computation ... 2
5.1.6 General requirements for the measurements ... 4
5.1.7 Installation requirements ... 5
5.1.8 Uncertainty on the measurement of flowrate ... 7
5.2 Guidance specific to the use of ISO 5167-2:2022 ... 7
5.2.1 Scope ... 7
5.2.2 Normative references ... 7
5.2.3 Terms, definitions and symbols ... 8
5.2.4 Principles of the method of measurement and computation ... 8
5.2.5 Orifice plates ... 8
5.2.6 Installation requirements ... 15
5.2.7 Flow calibration of orifice meters ... 21
5.3 Guidance specific to the use of ISO 5167-3:2022 ... 21
5.3.1 Scope ... 21
5.3.2 Normative references ... 21
5.3.3 Terms and definitions ... 21
5.3.4 Principles of the method of measurement and computation ... 22
5.3.5 Nozzles and Venturi nozzles ... 22
5.3.6 Installation requirements ... 22
5.3.7 Flow calibration of nozzles ... 22
5.4 Guidance specific to the use of ISO 5167-4:2022 ... 22
5.5 Guidance specific to the use of ISO 5167-5:2022 ... 22
5.6 Guidance specific to the use of ISO 5167-6:2022 ... 22
6 Information of a general nature relevant to the application of ISO 5167:2022 (all parts) ... **23**
6.1 Secondary instrumentation ... 23
6.1.1 General ... 23
6.1.2 General requirements concerning installation of secondary instruments ... 23
6.2 Measurement of pressure and differential pressure ... 25
6.2.1 General ... 25
6.2.2 Connections for pressure signal transmissions between primary and secondary elements ... 25
6.2.3 Pressure measurement devices ... 25
6.3 Measurement of temperature ... 27
6.3.1 General ... 27
6.3.2 Fundamentals of measuring the temperature of a moving fluid ... 27
6.3.3 Sensor installation ... 28
6.3.4 Precautions for accurate measurement ... 28
6.3.5 Restrictions on thermowells ... 29
6.3.6 Additional precautions in the case of fluctuating temperatures ... 29

AVA Documents
Document Sharing Hub

© ISO 2023 – All rights reserved

Full document details: PD ISO/TR 9464:2023

6.3.7 Devices for temperature measurement ... 29
6.4 Determination of density ... 31
6.4.1 General ... 31
6.4.2 Installation of density transducers ... 32
6.4.3 Additional method for the determination of the density of gas ... 35
6.4.4 Special consideration concerning gas density ... 35
6.4.5 Special considerations concerning liquid density ... 35
6.5 Electrical supply and electrical installations ... 36
6.5.1 Potentially explosive atmospheres ... 36
6.5.2 Cabling ... 36
6.5.3 Electronic equipment ... 36
Annex A (informative) **Principles of measurement and computation** ... **37**
Annex B (informative) **Computation of compressibility factor for natural gases** ... **53**
Annex C (informative) **Orifice plate assembly** ... **54**
Bibliography ... **63**

© ISO 2023 – All rights reserved
Documents
Document Sharing Hub
Full document details: PD ISO/TR 9464:2023

Foreword

ISO (the International Organization for Standardization) is a worldwide federation of national standards bodies (ISO member bodies). The work of preparing International Standards is normally carried out through ISO technical committees. Each member body interested in a subject for which a technical committee has been established has the right to be represented on that committee. International organizations, governmental and non-governmental, in liaison with ISO, also take part in the work. ISO collaborates closely with the International Electrotechnical Commission (IEC) on all matters of electrotechnical standardization.

The procedures used to develop this document and those intended for its further maintenance are described in the ISO/IEC Directives, Part 1. In particular, the different approval criteria needed for the different types of ISO document should be noted. This document was drafted in accordance with the editorial rules of the ISO/IEC Directives, Part 2 (see www.iso.org/directives).

ISO draws attention to the possibility that the implementation of this document may involve the use of (a) patent(s). ISO takes no position concerning the evidence, validity or applicability of any claimed patent rights in respect thereof. As of the date of publication of this document, ISO had not received notice of (a) patent(s) which may be required to implement this document. However, implementers are cautioned that this may not represent the latest information, which may be obtained from the patent database available at www.iso.org/patents. ISO shall not be held responsible for identifying any or all such patent rights.

Any trade name used in this document is information given for the convenience of users and does not constitute an endorsement.

For an explanation of the voluntary nature of standards, the meaning of ISO specific terms and expressions related to conformity assessment, as well as information about ISO's adherence to the World Trade Organization (WTO) principles in the Technical Barriers to Trade (TBT), see www.iso.org/iso/foreword.html.

This document was prepared by Technical Committee ISO/TC 30, *Measurement of fluid flow in closed conduits*, Subcommittee SC 2, *Pressure differential devices*.

This third edition cancels and replaces the second edition (ISO/TR 9464:2008), which has been technically revised.

The main changes are as follows:

— this document has been revised to be consistent with ISO 5167:2022;

— this document is consistent with ISO/IEC Guide 98-3;

— the subclause on pressure transmitters has been updated.

Any feedback or questions on this document should be directed to the user's national standards body. A complete listing of these bodies can be found at www.iso.org/members.html.

© ISO 2023 – All rights reserved

Documents
Document Sharing Hub
Full document details: PD ISO/TR 9464:2023

Introduction

The objective of this document is to assist users of ISO 5167, which was published in 2022 in six parts. Guidance on particular clauses of ISO 5167:2022 is given.

Some clauses of ISO 5167:2022 series are not commented upon and the corresponding clause numbers are therefore omitted from this document, except when it has been thought to be useful to keep a continuous numbering of paragraphs.

© ISO 2023 – All rights reserved
Documents
Document Sharing Hub
Full document details: PD ISO/TR 9464:2023

Guidelines for the use of ISO 5167:2022

1 Scope

The objective of this document is to provide guidance on the use of ISO 5167:2022 series. ISO 5167:2022 is an International Standard for flow measurement based on the differential pressure generated by a constriction introduced into a circular conduit (see ISO 5167-1:2022, 5.1). It presents a set of rules and requirements based on theory and experimental work undertaken in the field of flow measurement.

For a more detailed description of the scope, reference is made to ISO 5167-1:2022, Clause 1. Definitions and symbols applicable to this document are given in ISO 5167-1:2022, Clauses 3 and 4.

Neither ISO 5167-1:2022 nor this document gives detailed theoretical background, for which reference is made to any general textbook on fluid flow.

2 Normative references

The following documents are referred to in the text in such a way that some or all of their content constitutes requirements of this document. For dated references, only the edition cited applies. For undated references, the latest edition of the referenced document (including any amendments) applies.

ISO 4006, *Measurement of fluid flow in closed conduits — Vocabulary and symbols*

3 Terms and definitions

For the purposes of this document, the terms and definitions given in ISO 4006 apply.

ISO and IEC maintain terminology databases for use in standardization at the following addresses:

— ISO Online browsing platform: available at https://www.iso.org/obp

— IEC Electropedia: available at https://www.electropedia.org/

4 How the structure of this guide relates to the ISO 5167:2022 series

Clause 5 of this document sets out the guidance specific to each of the six parts of ISO 5167:2022:

— 5.1 covers part 1;

— 5.2 covers part 2;

— 5.3 covers part 3;

— 5.4 covers part 4;

— 5.5 covers part 5;

— 5.6 covers part 6.

Subsequent subclause numbering relates to the clauses in each of the parts. Hence, 5.1.1 covers Clause 1 in ISO 5167-1:2022; 5.2.6.4.3 covers 6.4.3 in ISO 5167-2:2022.

Guidance applicable to all six parts is given in Clause 6.

© ISO 2023 – All rights reserved

Documents
Document Sharing Hub
Full document details: PD ISO/TR 9464:2023

5 Guidance on the use of the ISO 5167:2022 series

5.1 Guidance specific to the use of ISO 5167-1:2022

5.1.1 Scope

No comments on this clause.

5.1.2 Normative references

No comments on this clause.

5.1.3 Terms and definitions

No comments on this clause.

5.1.4 Symbols and subscripts

No comments on this clause.

5.1.5 Principle of the method of measurement and computation

5.1.5.1 Principle of the method of measurement

No comments on this subclause.

5.1.5.2 Method of determination of the diameter ratio of the standard primary device

See Annex A.

5.1.5.3 Computation of flowrate

The formulae to be used to determine the flowrate of a metering system are given in ISO 5167-1:2022, Clause 5. Some results of these calculations will be fixed with installation dimensions and will only need to be computed once. Other calculations will need to be repeated for every flow measurement point. Annex A gives worked examples of the iterative computations shown in ISO 5167-1:2022, Annex A.

5.1.5.4 Determination of density, pressure and temperature

5.1.5.4.1 General

No comments on this subclause.

5.1.5.4.2 Density

For details on density measurement, see 6.4.

For details on density computation, see Annex B.

5.1.5.4.3 Static pressure

No comments on this subclause.

5.1.5.4.4 Temperature

The computation of temperature decrease resulting from expansion of the fluid through the primary device requires knowledge of the Joule-Thomson coefficient. The coefficient is a function of temperature.

© ISO 2023 – All rights reserved
Documents
Document Sharing Hub
Full document details: PD ISO/TR 9464:2023

pressure and gas composition. The calculation can be carried out using an equation of state (see, in Annex B, the "detailed method" using molar composition analysis) or by the use of an approximation valid for natural gas mixtures that are not too rich, and when p and T are in the range given below. In the last case, the coefficient is a function of p and T alone.

Provided that, in the molar composition of the natural gas, methane is greater than 80 %, the temperature is in the range 0 °C to 100 °C and the absolute static pressure is in the range 100 kPa to 20 MPa (1 bar to 200 bar)

$$\mu_{\mathrm{JT}} = 0{,}35 - 0{,}001\,42t + \left(0{,}231 - 0{,}002\,94t + 0{,}000\,013\,6t^2\right)\left(0{,}998 + 0{,}000\,41p - 0{,}000\,111\,5p^2 + 0{,}000\,000\,3p^3\right) \quad (1)$$

where

μ_{JT} is the Joule-Thomson coefficient, in kelvin per bar (K/bar);

t is the temperature of the fluid, in degrees Celsius (°C);

p is the absolute static pressure of the fluid, in bar.

The uncertainty was determined from the differences between this equation and the Joule-Thomson coefficient of 14 common natural gases and is given by

$$U = 0{,}066\left(1 - \frac{t}{200}\right) \qquad \text{for } p \leq 70 \text{ bar (7 MPa)} \quad (2)$$

and

$$U = 0{,}066\left(1 - \frac{t}{200}\right)\left[1 - \frac{(290 - t)}{4}\left(\frac{1}{70} - \frac{1}{p}\right)\right] \qquad \text{for } p > 70 \text{ bar (7 MPa)} \quad (3)$$

where U is the expanded uncertainty in the Joule-Thomson coefficient (K/bar) at k = 2 (approximately 95 % confidence level).

NOTE If an orifice plate with β = 0,6 has a differential pressure Δp = 0,5 bar, the uncertainty in the Joule-Thomson coefficient corresponds to an expanded uncertainty in flowrate in the range from 0,001 % to 0,009 % at k = 2 (approximately 95 % confidence level), depending on the temperature, the pressure and the gas composition.

5.1.5.5 Differential pressure flow measurement system

No comments on this subclause.

5.1.5.6 Differential pressure flow measurement system design considerations

5.1.5.6.1 No comments on this subclause.

5.1.5.6.2 No comments on this subclause.

5.1.5.6.3 When comparing the permanent pressure loss with alternative differential pressure meter designs, it is important to compare meter designs that are sized to provide a similar range of differential pressure, rather than to compare different meter designs with the same value of β.

5.1.5.6.4 No comments on this subclause.

5.1.5.6.5 No comments on this subclause.

© ISO 2023 – All rights reserved

Documents
Document Sharing Hub
Full document details: PD ISO/TR 9464:2023

5.1.6 General requirements for the measurements

5.1.6.1 Primary device

5.1.6.1.1 No comments on this subclause.

5.1.6.1.2 No comments on this subclause.

5.1.6.1.3 Although not exhaustive, Table 1 lists materials most commonly used for the manufacture of primary devices.

Table 1 — Steels commonly used for the manufacture of primary devices

	ASTM/AISI	BS 970	AFNOR	DIN
Stainless steels	304 316	304-S15 316-S16	Z6CN18-09 Z6CND17-11	1.4301 1.4401
High elastic limit stainless steel	420	420-S37	Z30C13	

Table 2 gives the mean linear expansion coefficient, elasticity moduli and yield stresses for the materials of Table 1 according to their ASTM/AISI designation.

Table 2 — Typical characteristics of commonly used steels

ASTM/AISI designation	Mean linear expansion coefficient between 0 °C and 100 °C K^{-1}	Elasticity modulus Pa	Yield stress Pa
304	17×10^{-6}	193×10^{9}	215×10^{6}
316	16×10^{-6}	193×10^{9}	230×10^{6}
420	10×10^{-6}	200×10^{9}	494×10^{6}

The values given in Table 2 vary with both temperature and the treatment process of the steel. For precise calculations, it is recommended that the data are obtained from the manufacturer.

When the primary device under operating conditions is at a different temperature from the one at which the diameter "*d*" was determined (this temperature is referred to as the reference or calibration temperature), it is necessary to calculate the expansion or contraction of the primary device. The corrected diameter "*d*" to be used in the computation of diameter ratio and flowrate is calculated using Formula (4), assuming there is no restraint due to the mounting:

$$d = d_0 [1 + \lambda_d (T - T_0)] \tag{4}$$

where

d is the primary device diameter in flowing conditions;

d_0 is the primary device diameter at reference temperature;

λ_d is the mean linear expansion coefficient of the primary device material;

T is the primary device temperature in flowing conditions;

T_0 is the reference or calibration temperature.

© ISO 2023 – All rights reserved
Documents
Document Sharing Hub
Full document details: PD ISO/TR 9464:2023

Where automatic temperature correction is not required in the flow computer, the uncertainty for "*d* " included in the overall uncertainty calculations is increased for the change in "*d* " due to temperature variation (see ISO 5167-1:2022, 8.3.2.4). An initial calculation might show that this additional uncertainty is small enough to be considered negligible.

5.1.6.2 Nature of the fluid

No comments on this subclause.

5.1.6.3 Flow conditions

5.1.6.3.1 No comments on this subclause.

5.1.6.3.2 No comments on this subclause.

5.1.6.3.3 No comments on this subclause.

5.1.7 Installation requirements

5.1.7.1 General

The following list of inspection equipment is not exhaustive, but provides a basis for inspection control:

— calipers (thickness, diameters);

— internal micrometer (diameters);

— micrometer (thickness);

— gauge block, feeler gauge (relative position, absolute standard for checking micrometers);

— protractor (angles);

— profile measuring apparatus (edge);

— straight edge rule (flatness);

— three point bore gauge (internal diameter).

It is necessary only to use instruments that can be calibrated to primary standards if optimum accuracy is required.

5.1.7.1.1 No comments on this subclause.

5.1.7.1.2 No comments on this subclause.

5.1.7.1.3 No comments on this subclause.

5.1.7.1.4 No comments on this subclause.

5.1.7.1.5 No comments on this subclause.

5.1.7.1.6 The requirements in this subclause of ISO 5167-1, where drain or vent holes are located near to the primary device, are illustrated in Figure 1. This figure illustrates the importance of placing the drain or vent hole in the annular chamber where one is used. The location of a drain or vent hole relative

© ISO 2023 – All rights reserved

Documents
Document Sharing Hub
Full document details: PD ISO/TR 9464:2023

to a pressure tapping is of greater importance where there is no annular chamber and the drain or vent hole enters the pipe itself.

The flowing fluid might cause deposition, corrosion or erosion of the inner wall of the pipe. The installation might therefore not conform to the requirements of ISO 5167-1. Internal inspection of the pipe is carried out at intervals appropriate to the conditions of application.

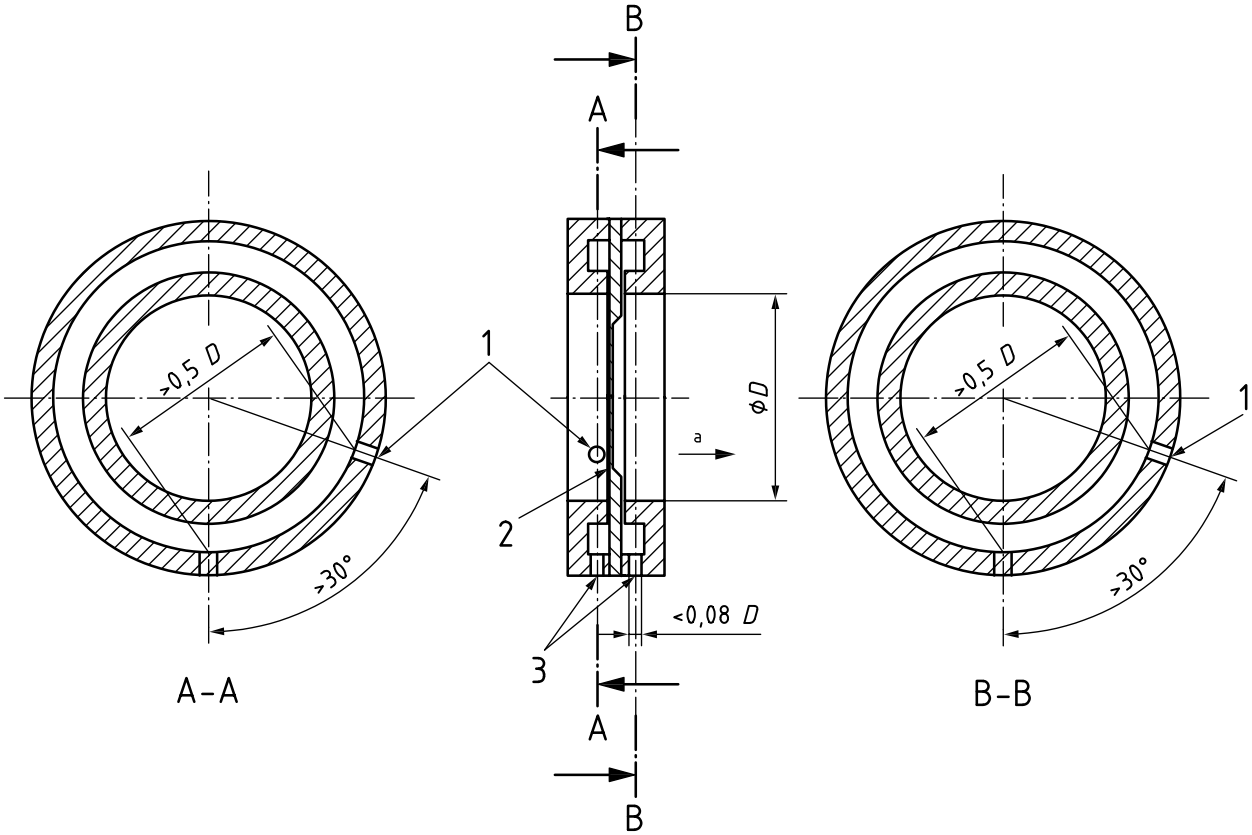

Key

1 pressure tapping

2 orifice plate

3 drain holes and/or vent holes

[a] Flow direction.

Figure 1 — Location of drain holes and/or vent holes

5.1.7.1.7 This subclause is intended to ensure a reliable measurement of temperature. The flowing temperature is an important parameter since it is used in calculating the density of the flowing fluid and is used to calculate *d* and *D*. Furthermore, it is used to calculate critical process parameters under flowing conditions.

5.1.7.2 Minimum upstream and downstream straight lengths

5.1.7.2.1 No comments on this subclause.

© ISO 2023 – All rights reserved

Documents
Document Sharing Hub
Full document details: PD ISO/TR 9464:2023

5.1.7.2.2 When designing a metering pipe installation, it is recommended that the required minimum straight lengths are determined by the maximum diameter ratio that is expected in the life of the installation.

For diameter ratios not actually shown in ISO 5167-2:2022, Table 3, ISO 5167-3:2022, Table 3 or ISO 5167-4:2022, Table 1 but which are inside the limits of the standard, it is reasonable practice to interpolate linearly between the values obtained at the nearest two diameter ratios.

If an orifice meter is designed to measure the flowrate in either direction, the minimum requirements for upstream and downstream straight lengths as specified in ISO 5167-2:2022, 6.2 and Table 3 are applicable on both sides of the orifice plate.

5.1.7.3 General requirement for flow conditions at the primary device

No comments on this subclause.

5.1.7.4 Flow conditioners

Although swirl is generally not detectable in visual inspection of the pipe, swirl and asymmetry are sometimes visible in the coating, if present, on an orifice plate. A typical herring bone or chevron pattern that is seen on a plate that has been in service for some time might indicate that the flow at the orifice plate is swirling or asymmetrical. Swirl has a greater effect on measurement than any other fluid dynamic mechanism and, although straight lengths of pipe will eliminate swirl, decay occurs very slowly and the swirl persists over considerable distances.

Flow conditioners are strongly recommended where the upstream fittings or arrangement of fittings are not defined in the tables, e.g. a metering system header. They can also be useful to reduce the required upstream length. However, the additional permanent pressure loss induced by a flow conditioner is also a consideration.

ISO 5167-1:2022 describes compliance testing for flow conditioners.

5.1.8 Uncertainty on the measurement of flowrate

ISO/IEC Guide 98-3[12] and ISO 5168[9] are taken into account when performing uncertainty analyses.

Careful study of any manufacturer's specification of uncertainty helps to ensure that the metering system uncertainty is known at the measured value concerned. Some points to note include the following:

a) uncertainties are often expressed as a percentage of full scale or range;

b) uncertainties are often defined at specified reference conditions. Additional uncertainties might arise when operating conditions differ from reference conditions.

5.2 Guidance specific to the use of ISO 5167-2:2022

5.2.1 Scope

ISO 5167-2 is concerned solely with orifice plates and their geometry and installation. It is necessary to read ISO 5167-2 in conjunction with ISO 5167-1.

Orifice plate meters with three arrangements of tappings are described and specified: flange tappings; corner tappings; and D and $D/2$ tappings.

5.2.2 Normative references

No comments on this clause.

© ISO 2023 – All rights reserved

Documents
Document Sharing Hub
Full document details: PD ISO/TR 9464:2023

5.2.3 Terms, definitions and symbols

No comments on this clause.

5.2.4 Principles of the method of measurement and computation

The density and viscosity of the fluid can be measured (see 6.4) or calculated (see Annex B) from the gas composition. A number of computer programs are available for carrying out the calculation of density and viscosity. In the case of a compressible fluid, the isentropic exponent at working conditions is necessary for the flow calculation and this can be calculated from gas composition.

5.2.5 Orifice plates

5.2.5.1 Description

5.2.5.1.1 General

No comments on this subclause.

5.2.5.1.2 General shape

5.2.5.1.2.1 No comments on this subclause.

5.2.5.1.2.2 No comments on this subclause.

5.2.5.1.2.3 Referring to Annex C, three rules need to be taken into consideration in designing an orifice plate to avoid excessive deformation:

— Firstly, that the mounting arrangements are such that no forces are imposed on the orifice plate which would cause the limit of 0,5 % slope given in ISO 5167-2:2022, 5.1.3.1 to be exceeded under the condition of no differential pressure.

— Secondly, that the thickness of the plate, E, is such that, taking account of the modulus of elasticity of the plate material, the differential pressure for the maximum design flowrate does not cause a 1 % slope to be exceeded. When the flowrate is reduced to zero, the plate will return to the original maximum 0,5 % slope.

— Thirdly, that, if it is possible for differential pressures in excess of those for maximum design flowrate to be applied, plastic buckling (i.e. permanent deformation) does not occur.

For the first point, great care is needed in both the design and the manufacture of the mounting arrangements. Single or double chamber mounting devices are satisfactory. When mounting orifice plates correctly between standard flanges, the flanges are at 90° ± 1° to the pipe axis. The pipe sections on both sides of the orifice plate are adequately supported to ensure that no undue strain is placed on the orifice plate.

For the second point, it is clear that elastic deformation of an orifice plate introduces an error in the flow measurement results. As long as the deformation does not exceed the 1 % slope required by ISO 5167-2:2022, 5.1.2.3, no additional uncertainty will result. Theoretical and experimental research (see Reference [21]) indicates that the maximum change in discharge coefficient for a 1 % slope is 0,2 %. Therefore, orifice plates that conform to the 0,5 % slope specified in ISO 5167-2:2022, 5.1.3.1 can deform an additional 0,5 % slope (i.e. 0,1 % change in discharge coefficient) while still conforming to the requirements of this subclause. Table 3 tabulates the plate thickness to plate support diameter ratios (E/D') for various values of β and differential pressures, valid for an orifice plate manufactured from ASTM/AISI stainless steel 304 or 316, and simply supported at its rim.

© ISO 2023 – All rights reserved
Documents
Document Sharing Hub
Full document details: PD ISO/TR 9464:2023

Table 3 — Minimum E/D' ratios for orifice plates manufactured in ASTM/AISI 304 or ASTM/AISI 316 stainless steel

β	Δp for maximum flowrate kPa						
	10	30	50	75	100	200	400
0,2	0,009	0,011	0,013	0,014	0,014	0,016	0,018
0,3	0,010	0,013	0,015	0,016	0,017	0,020	0,022
0,4	0,010	0,014	0,016	0,018	0,019	0,022	0,025
0,5	0,010	0,014	0,016	0,018	0,020	0,023	0,027
0,6	0,010	0,014	0,016	0,018	0,019	0,023	0,026
0,7	0,009	0,012	0,014	0,016	0,017	0,020	0,024
0,75	0,008	0,011	0,013	0,014	0,016	0,018	0,021

Table 3 is based on the use of Formula (5) when 100 $\Delta q_m/q_m$ is not to exceed 0,1 in magnitude and $Y = 193 \times 10^9$ Pa:

$$100\frac{\Delta q_m}{q_m} = -\frac{\Delta p}{Y}\left(\frac{D'}{E}\right)^2\left(\frac{aD'}{E} - b\right) \tag{5}$$

where

a is equal to $\beta\,(13{,}5 - 15{,}5\beta)$;

b is equal to $117 - 106\,\beta^{1,3}$;

Y is the modulus of elasticity of plate material;

D' is the plate support diameter (this might differ from pipe bore D);

E is the plate thickness.

For the third point, the maximum differential pressure (which can be greater than Δp in Table 3) that could be applied is determined by the designer. This could occur when the metering section is isolated and then vented to reduce it to atmospheric pressure to enable the orifice plate to be removed for inspection, or when pressurizing the metering section before putting into service.

To avoid plastic deformation (buckling), the orifice plate thickness is such that:

$$\frac{E}{D'} > \sqrt{\frac{\Delta p}{\sigma_y}(0{,}681 - 0{,}651\beta)} \tag{6}$$

where

Δp is the maximum differential pressure determined by the designer, in Pa;

σ_y is the yield stress of the orifice plate material, in Pa.

NOTE 1 For stainless steel, σ_y = 300 MPa, but it is advisable to use a value of 100 MPa for design purposes.

The minimum thickness of the orifice plate is whichever is the greater when determined by Formulae (5) and (6). If the calculations indicate that the necessary E is greater than $0{,}05D$ (see ISO 5167-2:2022, 5.1.5.3), the designer either reduces Δp or else introduces a stronger material.

EXAMPLE

— Formula (5):

© ISO 2023 – All rights reserved

Documents
Document Sharing Hub
Full document details: PD ISO/TR 9464:2023

β = 0,2

Y = 193 GPa

Δp = 50 kPa (0,5 bar)

gives E/D' > 0,013 from Formula (5) or Table 3.

— Formula (6):

β = 0,2

σ_y = 300 MPa for stainless steel, but for design purposes it is advisable to use

σ_y = 100 MPa

Δp = 100 kPa (1 bar) (see NOTE 2)

gives E/D' > 0,023.

Consequently, E/D' is at least 0,023.

NOTE 2 100 kPa (1 bar) is the maximum anticipated differential pressure.

5.2.5.1.3 Upstream face A

Table 4 gives values of deflection of the inner edge of the orifice corresponding to the 0,5 % slope for various pipe diameters and diameter ratios, β, assuming the deformation is rectilinear.

Table 4 — Plate flatness tolerances

β	Nominal diameter of the measuring pipe in millimetres										
	50	100	200	300	400	500	600	700	800	900	1 000
	Maximum deflection h in millimetres for 0,5 % slope										
0,20	0,10	0,20	0,40	0,50	0,80	1,00	1,20	1,40	1,60	1,80	2,00
0,25	0,09	0,19	0,38	0,56	0,75	0,94	1,13	1,31	1,50	1,69	1,88
0,30	0,09	0,18	0,35	0,52	0,70	0,88	1,05	1,22	1,40	1,57	1,75
0,35	0,08	0,16	0,32	0,49	0,65	0,81	0,97	1,14	1,30	1,46	1,63
0,40	0,07	0,15	0,30	0,45	0,60	0,75	0,90	1,05	1,20	1,35	1,50
0,45	0,07	0,14	0,27	0,41	0,55	0,69	0,82	0,96	1,10	1,24	1,38
0,50	0,06	0,13	0,25	0,38	0,50	0,63	0,75	0,88	1,00	1,13	1,25
0,55	0,06	0,11	0,22	0,34	0,45	0,56	0,67	0,79	0,90	1,01	1,13
0,60	0,05	0,10	0,20	0,30	0,40	0,50	0,60	0,70	0,80	0,90	1,00
0,65	0,04	0,09	0,18	0,26	0,35	0,44	0,52	0,61	0,70	0,79	0,88
0,70	0,04	0,07	0,15	0,22	0,30	0,38	0,45	0,52	0,60	0,67	0,75
0,75	0,03	0,06	0,13	0,19	0,25	0,31	0,38	0,44	0,50	0,56	0,63
See Reference [21].											

5.2.5.1.3.2 The roughness criterion in this subclause might not be adequate to ensure that the edge sharpness requirements of ISO 5167-2:2022, 5.1.7.2 can be achieved. It is advised that $Ra \leq 10^{-5}d$ and that the roughness of the orifice bore conforms to the same criterion.

5.2.5.1.3.3 It is very important that the bevelled side of the plate (if applicable) is located downstream. If the plate is inserted with the bevel upstream, the flowrate can be as much as 20 % underestimated.

© ISO 2023 – All rights reserved
Documents
Document Sharing Hub
Full document details: PD ISO/TR 9464:2023

It is good practice to mark the plate, if practical, to indicate the upstream face in such a way that the marking can be seen when the plate is installed.

One common method of identifying the upstream face where the orifice plate is installed between flanges is to install a "paddle plate" where the critical details are engraved on the handle which extends from the flange joint.

The upstream face of the orifice plate within diameter "*D*" is never indented by any marking.

5.2.5.1.4 Downstream face B

No comments on this subclause.

5.2.5.1.5 Thicknesses *E* and *e*

No comments on this subclause.

5.2.5.1.6 Angle of bevel

No comments on this subclause.

5.2.5.1.7 Edges G, H and I

5.2.5.1.7.1 No comments on this subclause.

5.2.5.1.7.2 The last paragraph of this subclause requires the edge radius to be measured if there is any doubt that it conforms to the requirements of ISO 5167-2:2022, 5.1.7.1 and 5.1.7.2. In those exceptional cases, some suitable techniques are given below.

a) Casting method (see Reference [17])

   A replica of the edge is produced using a casting technique. The casting is made in two stages, firstly with a coloured cold-forming plastic which takes up a negative form of the orifice plate edge, and then backed with a semi-transparent epoxy resin taking the place of the orifice plate. The completed casting is cut into two halves exposing the replica of the orifice plate edge, polished and photographed with magnification. The edge condition can then be measured.

b) Lead foil impression method (see Reference [17])

   An impression of the edge is made by pressing lead foil, 0,1 mm thick, onto the orifice plate edge. The lead foil is held in a micrometer-controlled inspection gauge and pressed onto the edge to give an indentation 0,12 mm deep. The indentation is examined using a projection microscope or similar equipment where the image is magnified, and a tracing of the outline is drawn. The edge condition can then be measured.

c) Paper-recording roughness method (see Figure 2)

   This instrument records on a magnified scale the movements of a tracing stylus. To obtain an enlarged reproduction of the orifice edge, the paper speed is chosen equal to the driving velocity times the magnification of the transverse movements. To establish the correct edge radius of the orifice, the tip radius of the stylus is subtracted from the edge radius measured from reproduction and divided by the degree of magnification. Note that the finite dimensions of the stylus, such as tip angle, tip radius and stylus length, can invalidate the measurement or conceal irregularities on the edge.

When edge sharpness is to be measured, at least 4 positions are used, equally spaced around the bore. When a defect is visible to the naked eye, the edge sharpness is also measured at this point.

© ISO 2023 – All rights reserved

Documents
Document Sharing Hub
Full document details: PD ISO/TR 9464:2023

Interpretation of the edge profile, whatever the reproduction technique, is a matter of expert judgement. Standard machining practice can cause the profile to be very irregular, even though the orifice plate conforms to all the requirements for dimensions and surface roughness.

All edges lying within the shaded region of Figure 3, with an additional margin for surface roughness, can be considered as acceptable. Some surface roughness is tolerable in accordance with ISO 5167-2:2022, 5.1.3.2, but very irregular edges are not acceptable.

A simple way of estimating the actual edge radius is by comparing the profile with curves (see examples in Figure 4) reproduced on a transparent foil.

Edge sharpness measurement is a specialist activity. There are laboratories in many countries that are capable of measuring edge sharpness to the standard required in ISO 5167-2:2022, 5.1.7.2. See Reference [17].

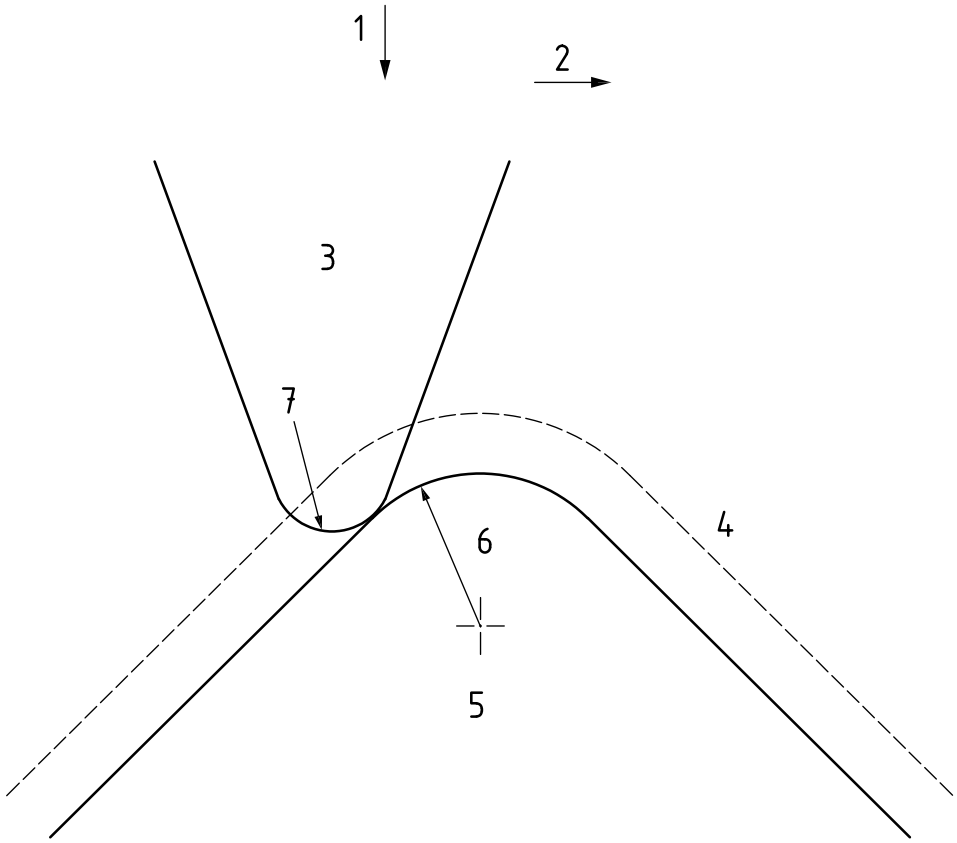

Key

1 recorded movement
2 driving movement
3 stylus
4 traced path
5 square edge
6 R = edge radius
7 radius

Figure 2 — Paper-recording roughness method

© ISO 2023 – All rights reserved
Documents
Document Sharing Hub
Full document details: PD ISO/TR 9464:2023

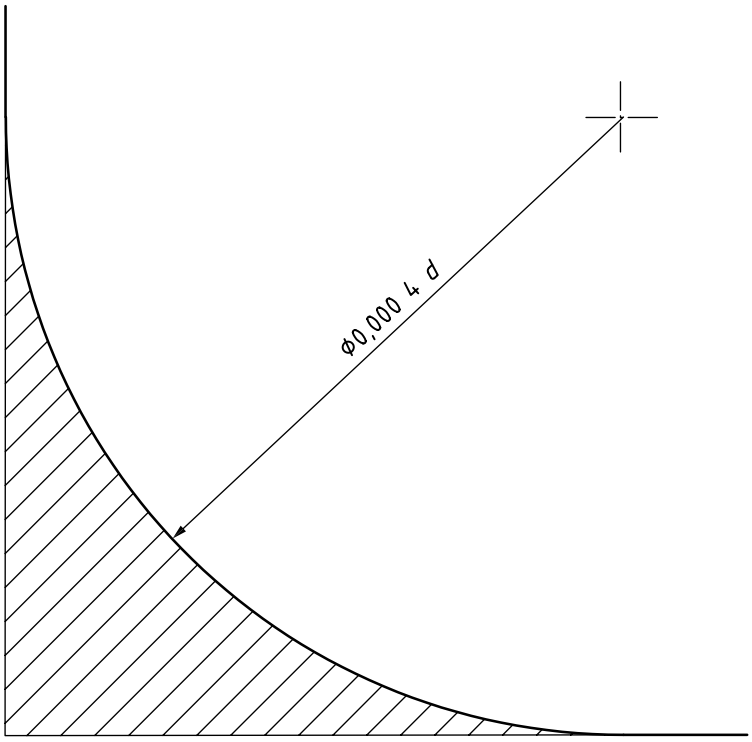

Figure 3 — Maximum edge radius

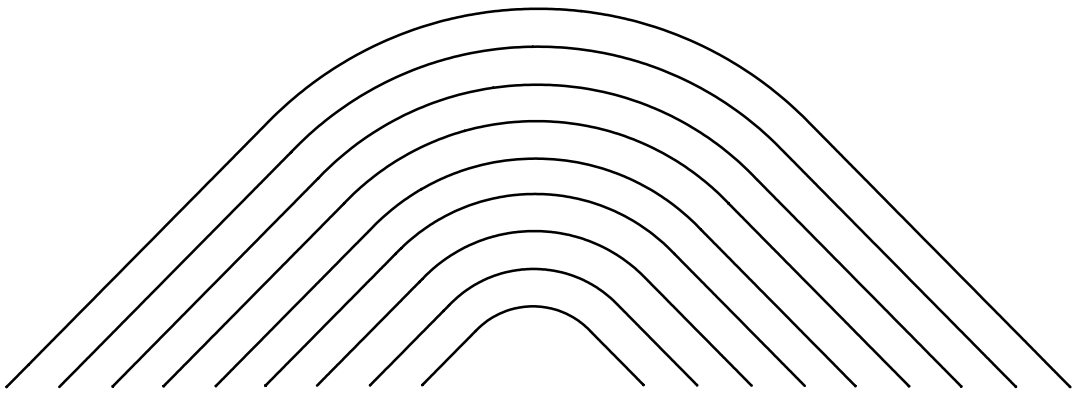

Figure 4 — Edge radius curves

5.2.5.1.7.3 No comments on this subclause.

5.2.5.1.7.4 No comments on this subclause.

5.2.5.1.8 Diameter of orifice, *d*

5.2.5.1.8.1 Because of the uncertainty of the discharge coefficient, and strict requirements on eccentricity, pipe roughness and upstream straight lengths, the user is advised to remain below a diameter ratio, β, of 0,6 for the most accurate measurements.

5.2.5.1.8.2 No comments on this subclause.

5.2.5.1.8.3 To enable the requirements of this subclause (i.e. 0,05 % difference) to be shown to have been met, it is necessary to measure or compare with an expanded uncertainty of at most 0,02 %.

© ISO 2023 – All rights reserved

AVA Documents Document Sharing Hub
Full document details: PD ISO/TR 9464:2023

5.2.5.1.9 Bidirectional plates

5.2.5.1.9.1 A symmetrical plate is intended to be used for the measurement of a fluid that flows in either direction. Such a plate is not bevelled.

The thickness, E, of the plate is then not greater than 0,02D. As a consequence, symmetrical plates are only used with low values of differential pressure to prevent deformation (see ISO 5167-2:2022, 5.1.2.3).

5.2.5.1.9.2 The appropriate tappings for the direction of flow are used.

5.2.5.1.10 Material and manufacture

Subclause 5.1.6.1.3 gives some information on the most commonly used materials and their characteristics.

5.2.5.2 Pressure tappings

This subclause means that pressure tappings are installed as follows: at least one upstream tapping and one downstream tapping of the same type, i.e. D and $D/2$, flange or corner (see ISO 5167-2:2022, 5.2.1). It is possible to install tappings of several types at the same location. In such cases, each type of tapping (each "set") is designed to be totally independent of the others: the various sets are designed not to interfere in any way, and failure to comply with this results in an inaccurate measurement.

For correct design this implies that, on the same side of the orifice plate, several tappings do not lie on the same axial plane (see Figure 5). Moreover, if they are of different types (e.g. flange and D and $D/2$), they are offset by at least 30°. If they are of the same type (e.g. all flange), then no guidance on the acceptable offset in terms of angle is given. Good design means that no tappings affect the readings of any other tappings.

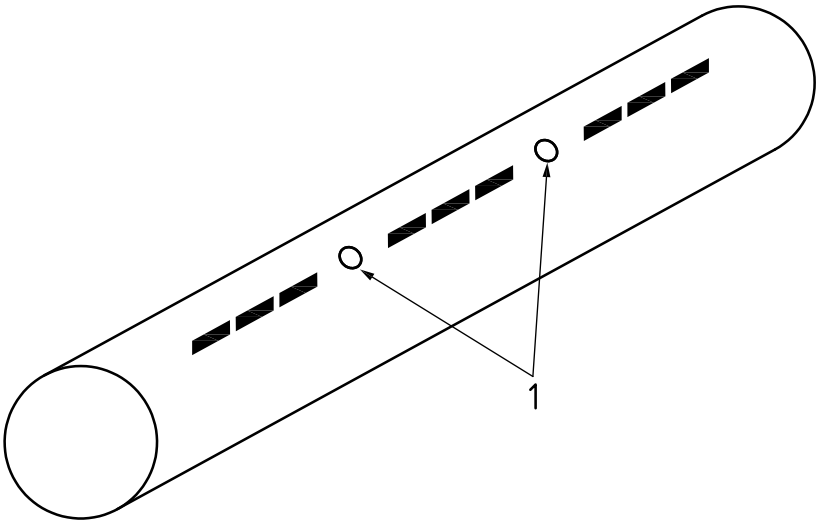

a) Example of incorrect positioning

© ISO 2023 – All rights reserved
Documents
Document Sharing Hub
Full document details: PD ISO/TR 9464:2023

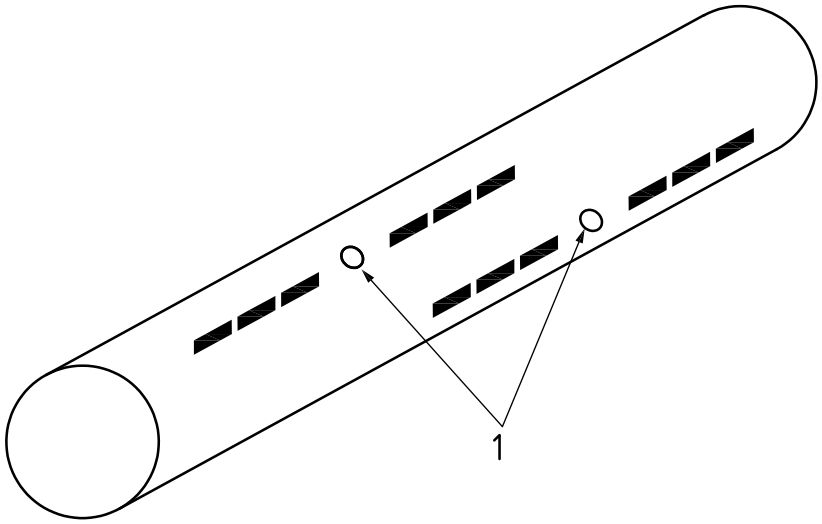

b) Example of correct positioning

Key

1 pressure tappings

Figure 5 — Relative position of pressure tappings of different types

5.2.5.3 Coefficients and corresponding uncertainties of orifice plates

No comments on this subclause.

5.2.5.4 Pressure loss, $\Delta\varpi$

ISO 5167-2:2022, Figure 5 does not take account of frictional pressure losses in the pipe.

ΔT, as shown, is appropriate for a gas metering system.

5.2.6 Installation requirements

5.2.6.1 General

No comments on this subclause.

5.2.6.2 Minimum upstream and downstream straight lengths for installation between various fittings and the orifice plate

No comments on this subclause.

5.2.6.3 Flow conditioners

No comments on this subclause.

5.2.6.4 Circularity and cylindricality of the pipe

NOTE To conform to the given specifications, the pipe lengths adjacent to the primary device might have to be specially machined. To ensure that no significant diameter difference exists between the various lengths of the measuring pipe (ISO 5167-2), it is wise that the ones adjacent to the primary device be made of a thicker pipe so that the correct internal diameter can be obtained after machining a length of 2 pipe diameters upstream of the primary device. This method results in a measuring pipe having homogeneous dimensions.

© ISO 2023 – All rights reserved

Documents
Document Sharing Hub
Full document details: PD ISO/TR 9464:2023