PD ISO/TS 13399-201:2014

BSI Standards Publication

Cutting tool data representation and exchange

Part 201: Creation and exchange of 3D models — Regular inserts

bsi.

...making excellence a habit.™

Document Sharing Hub

National foreword

This Published Document is the UK implementation of ISO/TS 13399-201:2014.

The UK participation in its preparation was entrusted to Technical Committee MTE/18, Tools tips and inserts for cutting applications.

A list of organizations represented on this committee can be obtained on request to its secretary.

This publication does not purport to include all the necessary provisions of a contract. Users are responsible for its correct application.

© The British Standards Institution 2014. Published by BSI Standards Limited 2014

ISBN 978 0 580 86820 7

ICS 25.100.01; 35.240.50

Compliance with a British Standard cannot confer immunity from legal obligations.

This Published Document was published under the authority of the Standards Policy and Strategy Committee on 31 July 2014.

Amendments issued since publication

Date	Text affected

Documents
Document Sharing Hub

Full document details: PD ISO/TS 13399-201:2014

TECHNICAL SPECIFICATION

ISO/TS 13399-201

First edition
2014-07-01

Cutting tool data representation and exchange —

Part 201: Creation and exchange of 3D models — Regular inserts

Représentation et échange des données relatives aux outils coupants —

Partie 201: Création et échange de modèles 3D — Plaquettes régulières

Reference number
ISO/TS 13399-201:2014(E)

Documents
Document Sharing Hub
© ISO 2014

Full document details: PD ISO/TS 13399-201:2014

COPYRIGHT PROTECTED DOCUMENT

© ISO 2014

All rights reserved. Unless otherwise specified, no part of this publication may be reproduced or utilized otherwise in any form or by any means, electronic or mechanical, including photocopying, or posting on the internet or an intranet, without prior written permission. Permission can be requested from either ISO at the address below or ISO's member body in the country of the requester.

ISO copyright office
Case postale 56 • CH-1211 Geneva 20
Tel. + 41 22 749 01 11
Fax + 41 22 749 09 47
E-mail copyright@iso.org
Web www.iso.org

Published in Switzerland

© ISO 2014 – All rights reserved

Documents
Document Sharing Hub

Full document details: PD ISO/TS 13399-201:2014

Contents

Page

Foreword ..... **iv**
Introduction ..... **vi**
1 Scope **1**
2 Normative references **1**
3 Starting elements, coordinate systems, planes **1**
3.1 General 1
3.2 Reference system 2
3.3 Coordinate systems 2
3.4 Planes 4
4 Design of the model **4**
5 Detailed geometry **4**
5.1 Equilateral and equiangular inserts and equilateral but non-equiangular inserts 4
5.2 “Non-equilateral but equiangular” and “non-equilateral and non-equiangular” inserts 17
5.3 Round inserts 21
5.4 Fixing hole geometry of the inserts 22
5.5 Insert thickness total 24
6 Attributes of surfaces — visualization of the model features **26**
7 Structure of design elements (tree of model) **26**
7.1 General 26
7.2 Examples of the model structure 26
8 Data exchange model **29**
Annex A (informative) **Information about nominal dimensions** **31**
Bibliography **32**

© ISO 2014 – All rights reserved

Documents
Document Sharing Hub
Full document details: PD ISO/TS 13399-201:2014

Foreword

ISO (the International Organization for Standardization) is a worldwide federation of national standards bodies (ISO member bodies). The work of preparing International Standards is normally carried out through ISO technical committees. Each member body interested in a subject for which a technical committee has been established has the right to be represented on that committee. International organizations, governmental and non-governmental, in liaison with ISO, also take part in the work. ISO collaborates closely with the International Electrotechnical Commission (IEC) on all matters of electrotechnical standardization.

The procedures used to develop this document and those intended for its further maintenance are described in the ISO/IEC Directives, Part 1. In particular the different approval criteria needed for the different types of ISO documents should be noted. This document was drafted in accordance with the editorial rules of the ISO/IEC Directives, Part 2 (see www.iso.org/directives).

Attention is drawn to the possibility that some of the elements of this document may be the subject of patent rights. ISO shall not be held responsible for identifying any or all such patent rights. Details of any patent rights identified during the development of the document will be in the Introduction and/or on the ISO list of patent declarations received (see www.iso.org/patents).

Any trade name used in this document is information given for the convenience of users and does not constitute an endorsement.

For an explanation on the meaning of ISO specific terms and expressions related to conformity assessment, as well as information about ISO's adherence to the WTO principles in the Technical Barriers to Trade (TBT) see the following URL: Foreword - Supplementary information

The committee responsible for this document is ISO/TC 29, *Small tools*.

ISO/TS 13399 consists of the following parts, under the general title *Cutting tool data representation and exchange*:

— *Part 1: Overview, fundamental principles and general information model*

— *Part 2: Reference dictionary for the cutting items* [Technical Specification]

— *Part 3: Reference dictionary for tool items* [Technical Specification]

— *Part 4: Reference dictionary for adaptive items* [Technical Specification]

— *Part 5: Reference dictionary for assembly items* [Technical Specification]

— *Part 50: Reference dictionary for reference systems and common concepts* [Technical Specification]

— *Part 60: Reference dictionary for connection systems* [Technical Specification]

— *Part 80: Creation and exchange of 3D models — Overview and principles* [Technical Specification]

— *Part 100: Definitions, principles and methods for reference dictionaries* [Technical Specification]

— *Part 150: Usage guidelines* [Technical Specification]

— *Part 201: Creation and exchange of 3D models — Regular inserts* [Technical Specification]

— *Part 301: Concept for the design of 3D models based on properties according to ISO/TS 13399-3: Modelling of thread-cutting taps, thread-forming taps and thread-cutting dies* [Technical Specification]

— *Part 302: Concept for the design of 3D models based on properties according to ISO/TS 13399-3: Modelling of solid drills and countersinking tools* [Technical Specification]

The following parts are under preparation:

© ISO 2014 – All rights reserved
Documents
Document Sharing Hub
Full document details: PD ISO/TS 13399-201:2014

— *Part 51: Designation system for customer solution cutting tools*

— *Part 202: Creation and exchange of 3D models — Irregular inserts* [Technical Specification]

— *Part 203: Creation and exchange of 3D models — Replaceable inserts for drilling* [Technical Specification]

— *Part 204: Creation and exchange of 3D models — Inserts for reaming* [Technical Specification]

— *Part 303: Creation and exchange of 3D models — Solid end mills* [Technical Specification]

— *Part 304: Creation and exchange of 3D models — Solid milling cutter with arbor hole* [Technical Specification]

— *Part 307: Creation and exchange of 3D models — End mills for indexable inserts* [Technical Specification]

— *Part 308: Creation and exchange of 3D models — Milling cutter with arbor hole for indexable inserts* [Technical Specification]

— *Part 309: Creation and exchange of 3D models — Tool holders for indexable inserts* [Technical Specification]

— *Part 311: Creation and exchange of 3D models — Solid reamers* [Technical Specification]

— *Part 312: Creation and exchange of 3D models — Reamers for indexable inserts* [Technical Specification]

— *Part 401: Creation and exchange of 3D models — Converting, extending and reducing adaptive items* [Technical Specification]

— *Part 405: Creation and exchange of 3D models — Collets* [Technical Specification]

© ISO 2014 – All rights reserved

Documents
Document Sharing Hub
Full document details: PD ISO/TS 13399-201:2014

Introduction

This part of ISO 13399 defines the concept, terms, and definitions regarding the creation and exchange of simplified 3D models of regular inserts that can be used with 3D models of cutting tools for NC-programming, simulation of manufacturing processes, and the collision determination within machining processes. It is not intended to standardize the design of the indexable insert itself, nor the cutting tool.

A regular insert is used in combination with a cutting tool in a machine to remove material from a workpiece by a shearing action at the cutting edges of the tool. Cutting tool data that can be described by ISO 13399 include, but are not limited to, everything between the workpiece and the machine tool. Information about inserts, solid tools, assembled tools, adaptors, components, and their relationships can be represented by this part of ISO 13399. The increasing demand providing the end user with 3D models for the purposes defined above is the basis for the development of this series of International Standards.

The objective of ISO 13399 is to provide the means to represent the information that describes cutting tools in a computer sensible form that is independent from any particular computer system. The representation will facilitate the processing and exchange of cutting tool data within and between different software systems and computer platforms and support the application of this data in manufacturing planning, cutting operations, and the supply of tools. The nature of this description makes it suitable not only for neutral file exchange, but also as a basis for implementing and sharing product databases and for archiving. The methods that are used for these representations are those developed by ISO TC184/SC4 for the representation of product data by using standardized information models and reference dictionaries.

Definitions and identifications of dictionary entries are defined by means of standard data that consist of instances of the EXPRESS entity data types defined in the common dictionary schema, resulting from a joint effort between ISO TC184/SC4/WG2 “Standard for the neutral representation of standard parts” and IEC “International electro technical commission”, TC 3 “Information structures, documentation and graphical symbols”, SC3D “Product properties and classes and their identification”, and in its extensions defined in ISO 13584-24 and ISO 13584-25.

© ISO 2014 – All rights reserved
Documents
Document Sharing Hub
Full document details: PD ISO/TS 13399-201:2014

Cutting tool data representation and exchange —

Part 201: Creation and exchange of 3D models — Regular inserts

1 Scope

This part of ISO 13399 specifies a concept for the design of cutting items, limited to regular inserts, with the usage of the related properties and domains of values.

This part of ISO 13399 specifies a common way of designing simplified models that contain the following:

— definitions and identification of the design features of regular inserts, with a link to the properties used;

— definitions and identification of the internal structure of the 3D model that represents features and properties of regular inserts.

The following are outside the scope of this part of ISO 13399:

— applications where these standard data can be stored or referenced;

— creation and exchange of simplified 3D models for cutting tools;

— creation and exchange of simplified 3D models for tool items;

— creation and exchange of simplified 3D models for other cutting items not described in this part of ISO 13399;

— creation and exchange of simplified 3D models for adaptive items;

— creation and exchange of simplified 3D models for assembly items and auxiliary items.

2 Normative references

The following documents, in whole or in part, are normatively referenced in this document and are indispensable for its application. For dated references, only the edition cited applies. For undated references, the latest edition of the referenced document (including any amendments) applies.

ISO 1832, *Indexable inserts for cutting tools — Designation*

ISO/TS 13399-2, *Cutting tool data representation and exchange — Part 2: Reference dictionary for the cutting items*

ISO/TS 13399-80[1)], *Cutting tool data representation and exchange — Part 80: Concept for the design of 3D models based on properties according to ISO 13399: Overview and principles*

3 Starting elements, coordinate systems, planes

3.1 General

The creation of 3D models shall be done by means of nominal dimensions.

1) To be published.

© ISO 2014 – All rights reserved

Documents
Document Sharing Hub

Full document details: PD ISO/TS 13399-201:2014

WARNING — There is no guarantee that the 3D model, created according to the methods described in this part of ISO 13399, is a true representation of the physical tool supplied by the tool manufacturer. If the models are used for simulation purposes, e.g. CAM simulation, it shall be taken into consideration that the real product dimensions can differ from those nominal dimensions.

NOTE Some of the definitions have been taken from ISO/TS 13399-50.

3.2 Reference system

The reference system consists of the following standard elements:

— **standard coordinate system**: right-handed rectangular Cartesian system in three dimensional space, called “primary coordinate system” (PCS);

— **three orthogonal planes**: planes in the coordinate system that contain the axes of the system, named “XY plane” (XYP), “XZ plane” (XZP), and “YZ plane” (YZP);

— **three orthogonal axes**: axes built as intersections of the three orthogonal plane lines respectively, named “x-axis” (XA), “y-axis” (YA), and “z-axis” (ZA).

3.3 Coordinate systems

3.3.1 General

In principle, an insert has two coordinate systems:

— the primary coordinate system, which determines the insert position in space (see Figure 1);

— the secondary coordinate system that helps to mount the insert on to a tool body (see Figure 2).

3.3.2 Coordinate system for insert location

The reference coordinate system “PCS” (primary coordinate system) defines the insert position in space. The determinations are as follows:

— the insert is located in the XY quadrant;

— the cutting edges are colinear with the XY plane;

— the major cutting edge is colinear with the positive x-axis;

— the theoretical sharp cutting point is on the y-axis;

— the direction of the insert thickness is parallel to the negative z-axis.

These determinations are valid for right-handed or neutral inserts. Left-handed inserts are mirrored through the YZ plane.

© ISO 2014 – All rights reserved
Documents
Document Sharing Hub
Full document details: PD ISO/TS 13399-201:2014

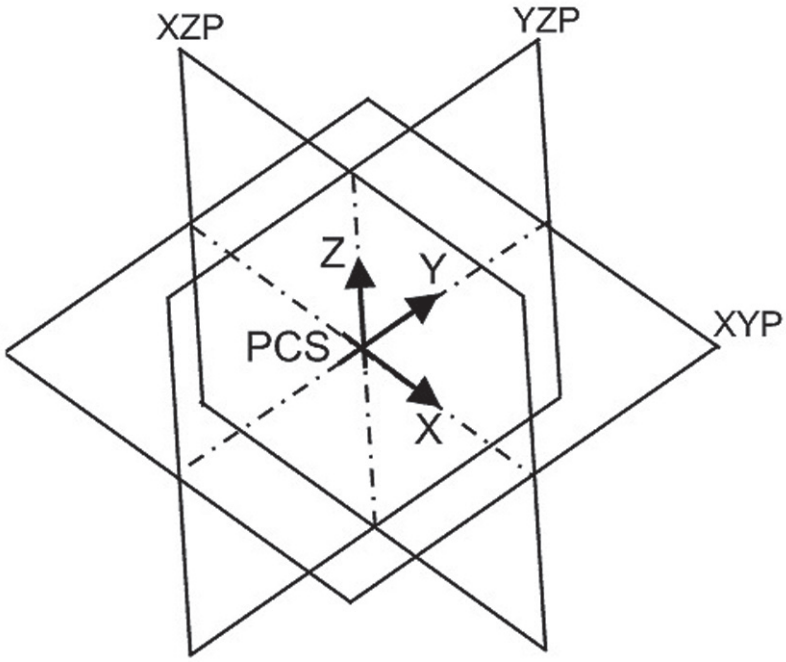

Figure 1 — Reference coordinate system "PCS"

3.3.3 Coordinate system for insert mounting

The reference coordinate system "MCS" (mounting coordinate system) is placed on the XY-plane of the PCS with the same orientation as the PCS, as in Figure 2, with the following determinations:

— at the centre of the inscribed circle of all equilateral and equiangular inserts (styles T, S, O, P, H according to ISO 1832);

— at the centre of the inscribed circle of all equilateral but non-equiangular inserts (styles C, D, E, M, V, W according to ISO 1832);

— at the centre of the inscribed circle of all round inserts (style R according to ISO 1832);

— at the intersection of the two diagonal lines of all non-equilateral but equiangular inserts (style L according to ISO 1832) and of all non-equiangular and non-equilateral inserts (style A, B, K according to ISO 1832);

— if it is not possible to create the diagonal lines on the inserts of style A, B, K and L, the origin of the MCS shall be created by means of using reference planes that are perpendicular to the XY-plane and located in the middle of the insert length (INSL) and the insert width (W1) and parallel to them.

a) **b)**

Figure 2 — Reference coordinate system "MCS"

© ISO 2014 – All rights reserved

Documents
Document Sharing Hub
Full document details: PD ISO/TS 13399-201:2014

If regular inserts have a specific design and are not interchangeable between vendors, the location of the MCS is at the manufacturer's discretion; either on the top face or on the bottom face. The orientation of the coordinate system shall follow the definitions in this part of ISO 13399.

3.4 Planes

To distinguish between the PCS and the MCS planes, the MCS planes shall be given the prefix "M":

— XYP (PCS) → MXYP (MCS)

— XZP (PCS) → MXZP (MCS)

— YZP (PCS) → MYZP (MCS)

4 Design of the model

The sketches (outline contour) and features of the basic model shall not contain details like chip breakers, face land geometry, or tipped cutting parts made of other cutting materials. Those features shall be designed as separate design elements after the basic geometry and shall be grouped as detail geometry, as described in Clause 5.

The structure and sequence of the modelling shall be kept as described. The defined preferred symbols shall be taken as names for the variables.

The models of the regular inserts shall contain the following design features:

— basic geometry;

— corner configuration geometry;

— mounting geometry.

The total amount of design features depends on the desired level of modelling and the complexity of the insert.

Within 3D CAD systems, the specified model structure of the basic shapes of the inserts are described in Clause 5.

5 Detailed geometry

5.1 Equilateral and equiangular inserts and equilateral but non-equiangular inserts

5.1.1 Necessary properties

This clause describes equilateral and equiangular inserts of the ISO shapes T, S, H, O, P and equilateral but non-equiangular inserts of the ISO shapes C, D, E, M, V, W. The modelling of the shapes C, D, E, M, V, and S is defined in this clause because of the special characteristic of the shape S (square) which is similar to the rhombic shape with an insert included angle (EPSR) of 90°.

For this group of inserts, the properties listed in Table 1 are valid.

© ISO 2014 – All rights reserved
Documents
Document Sharing Hub
Full document details: PD ISO/TS 13399-201:2014

Table 1 — Properties for the modelling of equilateral and equiangular inserts and equilateral but non-equiangular inserts

Preferred name	Preferred symbol
clearance angle major	AN
clearance angle wiper edge	AS
corner chamfer length	BCH[b]
wiper edge length	BS[c]
insert included angle	EPSR
inscribed circle diameter	IC
corner chamfer angle	KCH[b]
cutting edge angle major	KRINS[c]
cutting edge length[a]	L[a]
corner radius	RE[b]
insert thickness	S

[a] Shall be calculated; is dependent on IC and EPSR.

[b] Dependent on corner configuration, either rounded or chamfered.

[c] Shall be used if a wiper edge is on the insert.

Information about the connection interface code shall be filed as properties within the model and is necessary for using the model.

NOTE The information above and other relevant properties could be incorporated into the model as parameters or taken as a separate file.

5.1.2 Insert, triangular shape

5.1.2.1 General

Figure 3 indicates the properties that shall be used for the modelling of triangular inserts.

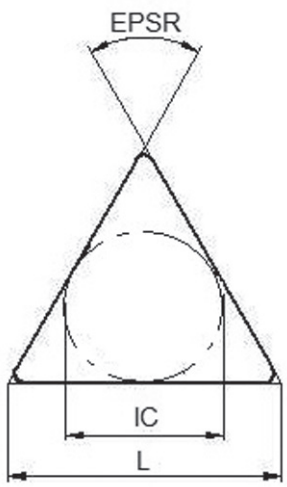

Figure 3 — Properties of triangular insert

© ISO 2014 – All rights reserved

Documents
Document Sharing Hub
Full document details: PD ISO/TS 13399-201:2014

5.1.2.2 Basic geometry

The geometry shall be designed as a solid model, containing all design features within the primary coordinate system "PCS". The position of the insert is according to ISO/TS 13399-2.

Design of the contour:

— A sketch without definition of the corner geometry shall be defined for the extrusion and the cutting edges shall be tangential to the inscribed circle; the model shall be designed with its theoretical sharp corners.

— Dimensioning shall be done with the listed properties (see Table 1).

The sketch shall be extruded with the property "insert thickness" (symbol "S") along the negative z-axis, with a negative inclination of "clearance angle major" (symbol "AN"). The basic model is shown in Figure 4.

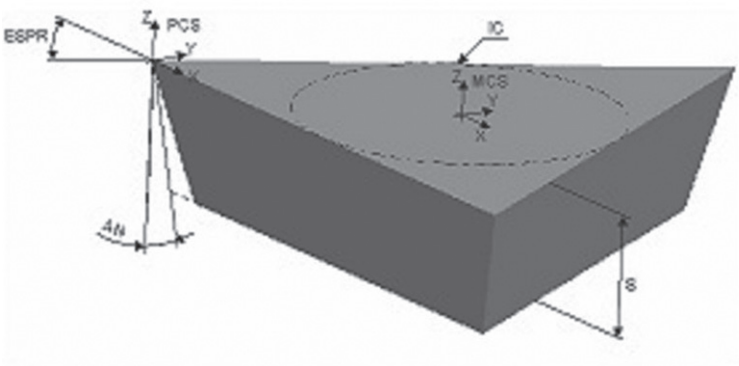

Figure 4 — Basic geometry of triangular insert

5.1.2.3 Detailed contour with corner geometry

5.1.2.3.1 General

This geometry shall also be designed as solid model. It shall have the same determinations as described in 5.1.2.2.

Three different detailed contours are possible:

— contour with corner radius;

— contour with corner chamfer;

— contour with wiper edge and corner chamfer.

5.1.2.3.2 Detailed contour with corner radius

The extrusion sketch shall contain all parameters describing the corner radius. The sketch shall be positioned with its theoretical sharp corner on the y-axis as defined in ISO/TS 13399-2.

The sketch shall be extruded as described in 5.1.2.2. Basic contour are illustrated in Figure 5.

© ISO 2014 – All rights reserved
Documents
Document Sharing Hub
Full document details: PD ISO/TS 13399-201:2014