PD ISO/TS 13399-302:2013

BSI Standards Publication

Cutting tool data representation and exchange

Part 302: Concept for the design of 3D models based on properties according to ISO/TS 13399-3: Modelling of solid drills and countersinking tools

bsi.

...making excellence a habit.™

Document Sharing Hub

Full document details: PD ISO/TS 13399-302:2013

National foreword

This Published Document is the UK implementation of ISO/TS 13399-302:2013.

The UK participation in its preparation was entrusted to Technical Committee MTE/18, Tools tips and inserts for cutting applications.

A list of organizations represented on this committee can be obtained on request to its secretary.

This publication does not purport to include all the necessary provisions of a contract. Users are responsible for its correct application.

© The British Standards Institution 2013. Published by BSI Standards Limited 2013

ISBN 978 0 580 83145 4

ICS 25.100.01; 35.240.50

Compliance with a British Standard cannot confer immunity from legal obligations.

This Published Document was published under the authority of the Standards Policy and Strategy Committee on 31 October 2013.

Amendments issued since publication

Date	Text affected

Documents
Document Sharing Hub

Full document details: PD ISO/TS 13399-302:2013

TECHNICAL SPECIFICATION

ISO/TS 13399-302

First edition
2013-10-15

Cutting tool data representation and exchange —

Part 302: Concept for the design of 3D models based on properties according to ISO/TS 13399-3: Modelling of solid drills and countersinking tools

Représentation et échange des données relatives aux outils coupants —

Partie 302: Description des modèles 3D basés sur les propriétés de l'ISO/TS 13399-3: Modélisation des forets monoblocs et des outils de lamage

Reference number
ISO/TS 13399-302:2013(E)

Documents
Document Sharing Hub

© ISO 2013

Full document details: PD ISO/TS 13399-302:2013

COPYRIGHT PROTECTED DOCUMENT

© ISO 2013

All rights reserved. Unless otherwise specified, no part of this publication may be reproduced or utilized otherwise in any form or by any means, electronic or mechanical, including photocopying, or posting on the internet or an intranet, without prior written permission. Permission can be requested from either ISO at the address below or ISO's member body in the country of the requester.

ISO copyright office
Case postale 56 • CH-1211 Geneva 20
Tel. + 41 22 749 01 11
Fax + 41 22 749 09 47
E-mail copyright@iso.org
Web www.iso.org

Published in Switzerland

© ISO 2013 – All rights reserved

Documents
Document Sharing Hub

Full document details: PD ISO/TS 13399-302:2013

Contents

Page

Foreword ..... **v**

Introduction ..... **vii**

1 Scope **1**

2 Normative references **1**

3 Starting elements, coordinate systems, planes **1**
3.1 General 1
3.2 Reference system 2
3.3 Coordinate system at the cutting part 2
3.4 MCS coordinate system 3
3.5 Planes 4
3.6 Cutting reference point (CRP) 4

4 Design of the model **5**
4.1 General 5
4.2 Necessary parameters for the connection interface feature 6

5 Twist drill **6**
5.1 General 6
5.2 Necessary properties 7
5.3 Geometry of the non-cutting part including the connection 8
5.4 Geometry of the cutting part 8
5.5 Twist drill — Complete 9

6 Step drill **10**
6.1 General 10
6.2 Necessary properties 10
6.3 Geometry of the non-cutting part including the connection 11
6.4 Geometry of the cutting part 11
6.5 Step drill — Complete 12

7 Core drill **12**
7.1 General 12
7.2 Necessary properties 13
7.3 Geometry of the non-cutting part including the connection 14
7.4 Geometry of the cutting part 14
7.5 Core drill — Complete 15

8 Counterbore **15**
8.1 General 15
8.2 Necessary properties 16
8.3 Geometry of the non-cutting part including the connection 16
8.4 Geometry of the cutting part 16
8.5 Counterbore — Complete 17

9 Stepped countersinking tool or tapered countersinking tool **18**
9.1 General 18
9.2 Necessary properties 19
9.3 Geometry of the non-cutting part including the connection 20
9.4 Geometry of the cutting part 20
9.5 Stepped or tapered countersinking tool — Complete 22

10 Spot drill **23**
10.1 General 23
10.2 Necessary properties 23
10.3 Geometry of the non-cutting part including the connection 24
10.4 Geometry of the cutting part 24
10.5 Spot drill — Complete 25

AVA Documents
Document Sharing Hub

© ISO 2013 – All rights reserved

Full document details: PD ISO/TS 13399-302:2013

11 Centre drill ... **25**
11.1 General ... 25
11.2 Necessary properties ... 27
11.3 Geometry of the non-cutting part including the connection ... 28
11.4 Geometry of the cutting part ... 28
11.5 Centre drill — Complete ... 29

12 Shell core drills ... **30**
12.1 General ... 30
12.2 Necessary properties ... 31
12.3 Geometry of the non-cutting part ... 32
12.4 Geometry of the cutting part ... 33
12.5 Shell core drill — Complete ... 34

13 Shell counterbore ... **34**
13.1 General ... 34
13.2 Necessary properties ... 35
13.3 Geometry of the non-cutting part ... 35
13.4 Geometry of the cutting part ... 35
13.5 Shell counterbore — Complete ... 35

14 Tapered shell countersinking tool ... **36**
14.1 General ... 36
14.2 Necessary properties ... 37
14.3 Geometry of the non-cutting part ... 37
14.4 Geometry of the cutting part ... 38
14.5 Tapered shell countersinking tool ... 38

15 Stepped shell countersinking tool ... **38**
15.1 General ... 38
15.2 Necessary properties ... 39
15.3 Geometry of the non-cutting part ... 39
15.4 Geometry of the cutting part ... 40
15.5 Stepped shell countersinking tool complete ... 40

16 Modelling of guide pilots ... **40**
16.1 General ... 40
16.2 Necessary properties ... 41
16.3 Guide pilot ... 41

17 Design of details ... **42**
17.1 Basis for modelling ... 42
17.2 Contact/clamping surfaces — Orientation ... 42
17.3 Chamfers, roundings, others ... 43

18 Attributes of surfaces — Visualization of model features ... **43**

19 Structure of design elements (tree of model) ... **43**

20 Data exchange model ... **44**

Annex A (informative) **Information about nominal dimensions** ... **45**

Bibliography ... **46**

© ISO 2013 – All rights reserved

Documents
Document Sharing Hub
Full document details: PD ISO/TS 13399-302:2013

Foreword

ISO (the International Organization for Standardization) is a worldwide federation of national standards bodies (ISO member bodies). The work of preparing International Standards is normally carried out through ISO technical committees. Each member body interested in a subject for which a technical committee has been established has the right to be represented on that committee. International organizations, governmental and non-governmental, in liaison with ISO, also take part in the work. ISO collaborates closely with the International Electrotechnical Commission (IEC) on all matters of electrotechnical standardization.

The procedures used to develop this document and those intended for its further maintenance are described in the ISO/IEC Directives, Part 1. In particular the different approval criteria needed for the different types of ISO documents should be noted. This document was drafted in accordance with the editorial rules of the ISO/IEC Directives, Part 2. www.iso.org/directives

Attention is drawn to the possibility that some of the elements of this document may be the subject of patent rights. ISO shall not be held responsible for identifying any or all such patent rights. Details of any patent rights identified during the development of the document will be in the Introduction and/or on the ISO list of patent declarations received. www.iso.org/patents

Any trade name used in this document is information given for the convenience of users and does not constitute an endorsement.

For an explanation on the meaning of ISO specific terms and expressions related to conformity assessment, as well as information about ISO's adherence to the WTO principles in the Technical Barriers to Trade (TBT) see the following URL: Foreword - Supplementary information

The committee responsible for this document is ISO/TC 29, *Small tools*.

ISO/TS 13399 consists of the following parts, under the general title *Cutting tool data representation and exchange*:

— *Part 1: Overview, fundamental principles and general information model*

— *Part 2: Reference dictionary for the cutting items* [Technical Specification]

— *Part 3: Reference dictionary for tool items* [Technical Specification]

— *Part 4: Reference dictionary for adaptive items* [Technical Specification]

— *Part 5: Reference dictionary for assembly items* [Technical Specification]

— *Part 50: Reference dictionary for reference systems and common concepts* [Technical Specification]

— *Part 60: Reference dictionary for connection systems* [Technical Specification]

— *Part 100: Definitions, principles and methods for reference dictionaries* [Technical Specification]

— *Part 150: Usage guidelines* [Technical Specification]

— *Part 301: Concept for the design of 3D models based on properties according to ISO/TS 13399-3: Modelling of thread-cutting taps, thread-forming taps and thread-cutting dies* [Technical Specification]

— *Part 302: Concept for the design of 3D models based on properties according to ISO/TS 13399-3: Modelling of solid drills and countersinking tools* [Technical Specification]

The following parts are under preparation:

— *Part 51: Designation system for customer solution cutting tools*

— *Part 80: Concept for the design of 3D models based on properties according to ISO/TS 13399: Overview and principles* [Technical Specification]

Documents
Document Sharing Hub

© ISO 2013 – All rights reserved

Full document details: PD ISO/TS 13399-302:2013

— *Part 201: Concept for the design of 3D models based on properties according to ISO/TS 13399-2: Modelling of regular inserts* [Technical Specification]

— *Part 202: Concept for the design of 3D models based on properties according to ISO/TS 13399-2: Modelling of irregular inserts* [Technical Specification]

— *Part 203: Concept for the design of 3D models based on properties according to ISO/TS 13399-2: Modelling of exchangeable inserts for drilling* [Technical Specification]

— *Part 204: Concept for the design of 3D models based on properties according to ISO/TS 13399-2: Modelling of inserts for reaming* [Technical Specification]

— *Part 303: Concept for the design of 3D models based on properties according to ISO/TS 13399-3: Modelling of end mills with solid cutting edges* [Technical Specification]

— *Part 304: Concept for the design of 3D models based on properties according to ISO/TS 13399-3: Modelling of milling cutters with arbor hole and solid cutting edges* [Technical Specification]

— *Part 307: Concept for the design of 3D models based on properties according to ISO/TS 13399-3: Modelling of end mills for indexable inserts* [Technical Specification]

— *Part 308: Concept for the design of 3D models based on properties according to ISO/TS 13399-3: Modelling of milling cutter with arbor hole for indexable inserts* [Technical Specification]

— *Part 309: Concept for the design of 3D models based on properties according to ISO/TS 13399-3: Tool holders for indexable inserts* [Technical Specification]

— *Part 311: Concept for the design of 3D models based on properties according to ISO/TS 13399-3: Modelling of solid reamers* [Technical Specification]

— *Part 312: Concept for the design of 3D models based on properties according to ISO/TS 13399-3: Modelling of reamers for indexable inserts* [Technical Specification]

— *Part 401: Concept for the design of 3D models based on properties according to ISO/TS 13399-4: Modelling of converting, extending and reducing adaptive items* [Technical Specification]

— *Part 405: Concept for the design of 3D models based on properties according to ISO/TS 13399-4: Modelling of collets* [Technical Specification]

© ISO 2013 – All rights reserved
Documents
Document Sharing Hub
Full document details: PD ISO/TS 13399-302:2013

Introduction

This part of ISO 13399 describes the concept, terms and definitions for designing simplified 3D models of drills and countersinking tools with solid cutting edges, which can be used for NC programming, simulation of manufacturing processes and the avoidance of collisions within machining processes. It is not intended to standardize the design of the cutting tool itself.

A cutting tool is used in a machine tool to remove material from a workpiece by a shearing action at the cutting edges of the tool. Cutting tool data that can be described by ISO 13399 (all parts) include, but are not limited to, everything between the workpiece and the machine tool. Information about inserts, solid tools, assembled tools, adaptors, components and their relationships can be represented by ISO 13399 (all parts). The increasing demand by the end user for 3D models for the purposes defined above is the basis for the development of this series of International Standards.

The objective of ISO 13399 (all parts) is to provide the means to represent information describing cutting tools in computer-sensible form, independent of any particular computer system. The representation will facilitate the processing and exchange of cutting tool data within and among different software systems and computer platforms and support the application of these data in manufacturing planning, cutting operations and the supply of tools. The nature of this description makes it suitable not only for neutral file exchange, but also as a basis for implementing and sharing product databases and for archiving. The methods used for these representations are those developed by ISO/TC 184/SC 4 for the representation of product data by standardized information models and reference dictionaries.

Dictionary entries are defined and identified by means of standard data that consist of instances of the EXPRESS entity data types defined in the common dictionary schema, resulting from a joint effort between ISO/TC 184/SC 4 and IEC SC3D, and its extensions defined in ISO 13584-24 and ISO 13584-25.

© ISO 2013 – All rights reserved

Documents
Document Sharing Hub
Full document details: PD ISO/TS 13399-302:2013

Documents
Document Sharing Hub

TECHNICAL SPECIFICATION ISO/TS 13399-302:2013(E)

Cutting tool data representation and exchange —

Part 302: Concept for the design of 3D models based on properties according to ISO/TS 13399-3: Modelling of solid drills and countersinking tools

1 Scope

This part of ISO 13399 specifies a concept for the design of tool items, limited to any kind of drilling and countersinking tools with solid cutting edges, together with the usage of the related properties and domains of values.

This part of ISO 13399 specifies a common way of designing simplified models that contain:

— definitions and identifications of the design features of drills and countersinking tools with solid cutting edges, with a link to the properties used;

— definitions and identifications of the internal structure of the 3D model that represents the features and properties of drills and countersinking tools with solid cutting edges.

The following are outside the scope of this part of ISO 13399:

— applications where these standard data may be stored or referenced;

— concept of 3D models for cutting tools;

— concept of 3D models for cutting items;

— concept of 3D models for other tool items not described in the scope of this part of ISO 13399;

— concept of 3D models for adaptive items;

— concept of 3D models for assembly and auxiliary items.

2 Normative references

The following documents, in whole or in part, are normatively referenced in this document and are indispensable to its application. For dated references, only the edition cited applies. For undated references, the latest edition of the referenced document (including any amendments) applies.

ISO/TS 13399-3, *Cutting tool data representation and exchange — Part 3: Reference dictionary for tool items*

ISO/TS 13399-60, *Cutting tool data representation and exchange — Part 60: Reference dictionary for connection systems*

3 Starting elements, coordinate systems, planes

3.1 General

3D models shall be modelled by means of nominal dimensions.

© ISO 2013 – All rights reserved

Documents
Document Sharing Hub
Full document details: PD ISO/TS 13399-302:2013

WARNING — There is no guarantee that the 3D model, created according to the methods described in this part of ISO 13399, is a true representation of the physical tool supplied by the tool manufacturer. If the model is used for simulation purposes (e.g. CAM simulation), it shall be taken into consideration that the real product dimensions may differ from those nominal dimensions.

NOTE Some of the definitions have been taken from ISO/TS 13399-50.

3.2 Reference system

The reference system consists of the following standard elements:

— standard coordinate system;

— right-handed rectangular Cartesian system in three-dimensional space, named "primary coordinate system" (PCS);

— three orthogonal planes;

— planes in the coordinate system that contain the axes of the system, named "xy-plane" (XYP), "xz-plane" (XZP) and "yz-plane" (YZP);

— three orthogonal axis;

— axes built as intersections of the three orthogonal planes lines, named "X-axis" (XA), "Y-axis" (YA) and "Z-axis" (ZA), respectively.

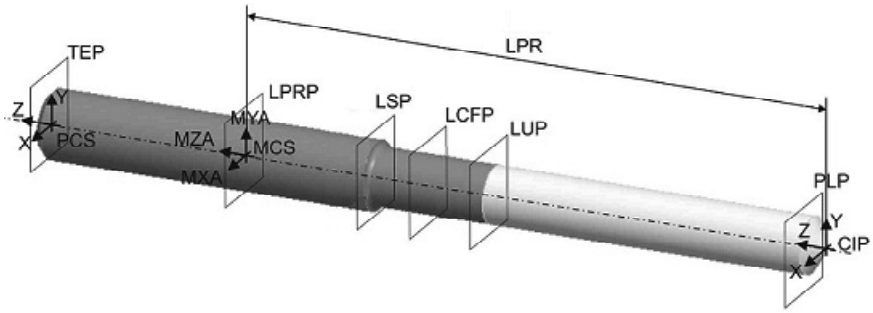

Figure 1 — Reference system

3.3 Coordinate system at the cutting part

The coordinate system at the cutting part, e.g. the drilling point or the planar countersunk face, named "coordinate system in process" (CIP), with a defined distance to the PCS shall be defined as indicated in Figure 1 and oriented as indicated in Figure 2 as follows:

— Z-axis of CIP points to the PCS;

— Z-axis of CIP is collinear to the Z-axis of PCS;

— Y-axis of CIP is parallel to the Y-axis of PCS.

© ISO 2013 – All rights reserved
Documents
Document Sharing Hub
Full document details: PD ISO/TS 13399-302:2013

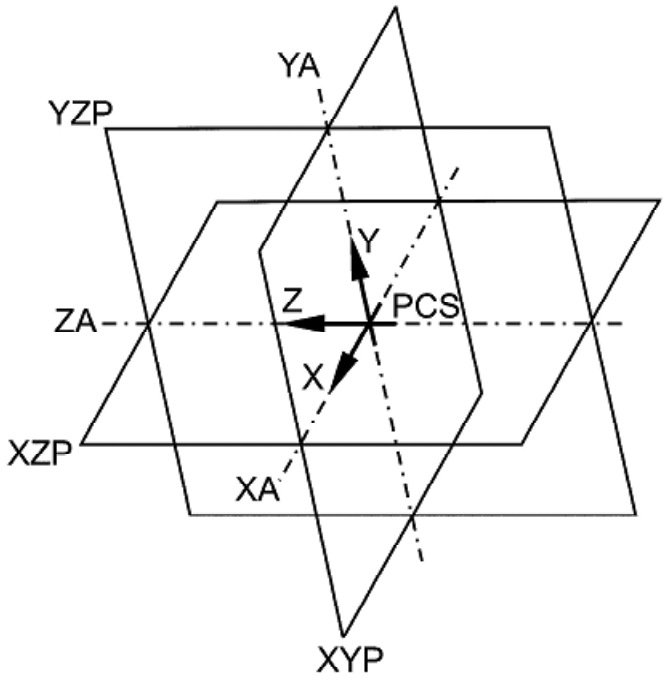

Figure 2 — Orientation of CIP

If the 3D modelling software gives the possibility to include interfaces for components, e.g. to mount a centre drill on to a complete cutting tool, it is advisable to use CIP.

If necessary, another designation has to be given on the interface of the component (dependent on the software). This is named "CSIF" (for "coordinate system interface") and it includes the CIP.

3.4 MCS coordinate system

A "mounting coordinate system" (MCS) shall be inserted within the 3D model to allow mounting with other components, congruent to the PCS. Figure 3 shows the orientation of MCS and PCS.

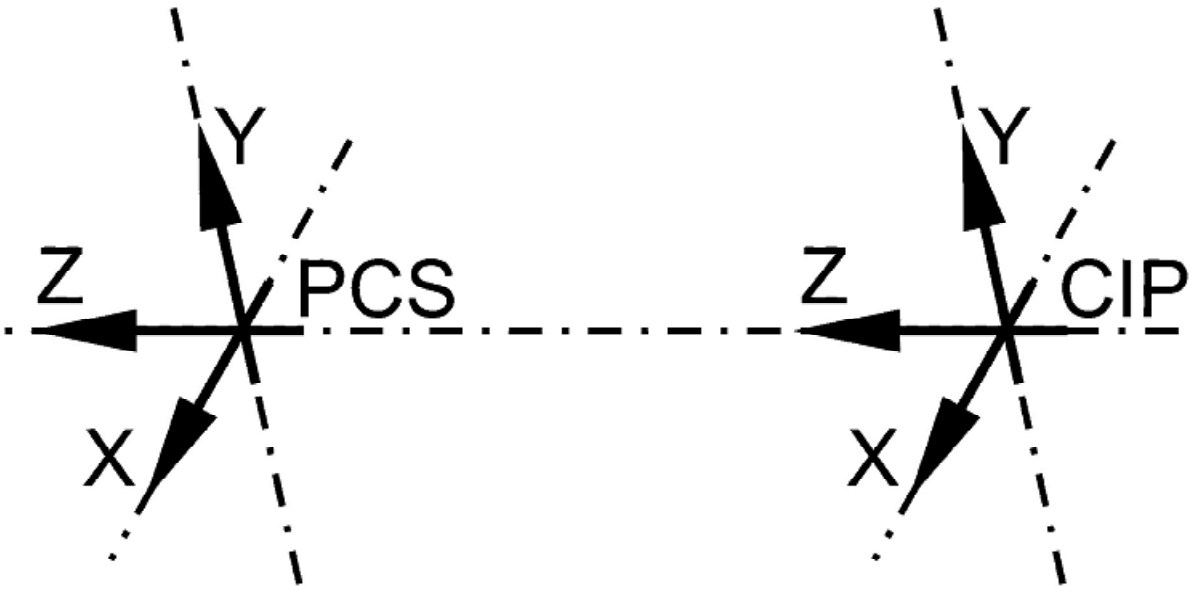

Figure 3 — Orientation of PCS and MCS reference system — Example

© ISO 2013 – All rights reserved

Documents
Document Sharing Hub
Full document details: PD ISO/TS 13399-302:2013

3.5 Planes

Modelling shall be based on planes according to Figure 3, to be used as reference, if applicable. It is, therefore, possible to vary the model or to suppress single features of independent designs by changing the value of one or more parameter(s) of the model design. Furthermore, identification of different areas shall be simplified by using the plane concept, even if they come into contact with each other with the same size (e.g. chip flute, shank).

The interdependency of design features requires a precise check of single elements, mainly on drills with different diameters, which shall be entered separately, even if they have the same value.

For 3D visualization of drilling and countersinking tools with non-indexable cutting edges, the planes shall be determined as indicated in Figure 4 as follows:

— "LCFP" plane for the chip flute length (LCF); based on CIP;

— "LPRP" plane for the protruding length (LPR); based on CIP;

— "LSP" plane for the shank length (LS); based on PCS;

— "LUP" plane for the usable length (LU); based on CIP;

— "PLP" plane for the distance between the front cutting point and the point that forms the full cutting diameter, measured parallel to the tool axis; based on CIP;

— "TEP" (tool end plane) plane for the overall length (OAL); based on CIP;

— MCS is located at the defined tool item position, if gauge lines are defined, or at the start of the protruding length [see LPRP (protruding length plane)].

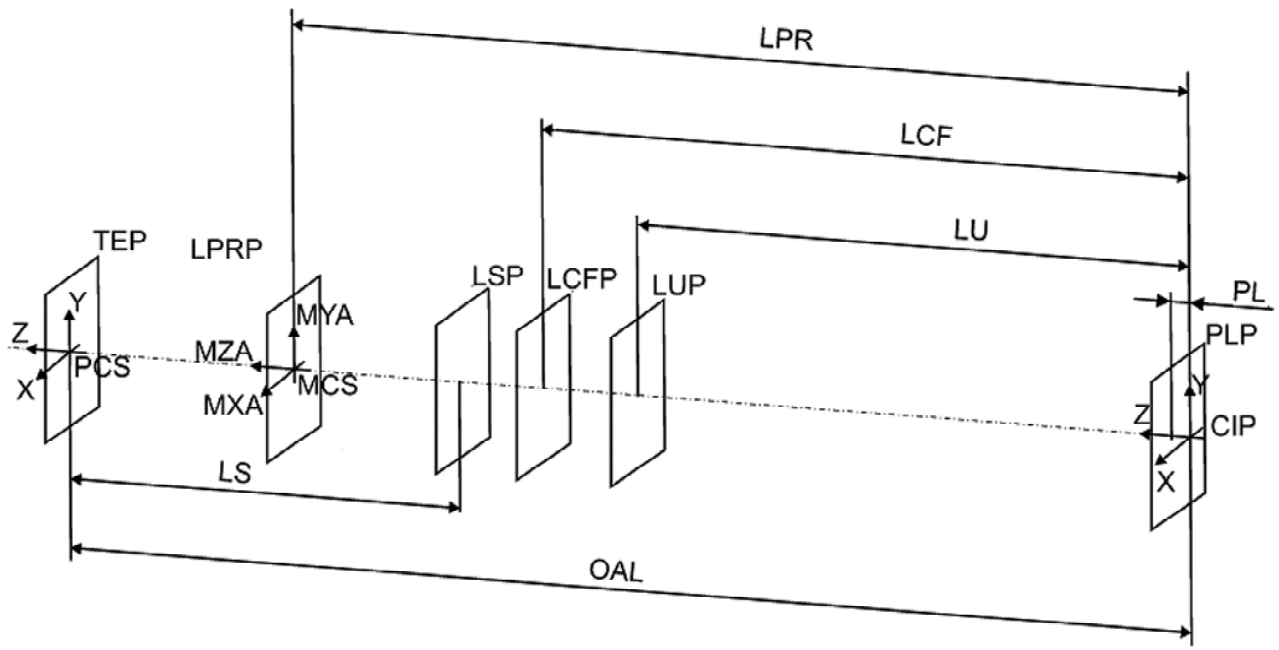

Figure 4 — Planes for design

3.6 Cutting reference point (CRP)

For the design of the point or chisel edge the cutting reference point shall be defined. The point is defined as the theoretical cutting edge in the XZ plane of the "PCS". It is, therefore, always referenced to the cutting diameter (see Figure 5).

© ISO 2013 – All rights reserved
Documents
Document Sharing Hub
Full document details: PD ISO/TS 13399-302:2013

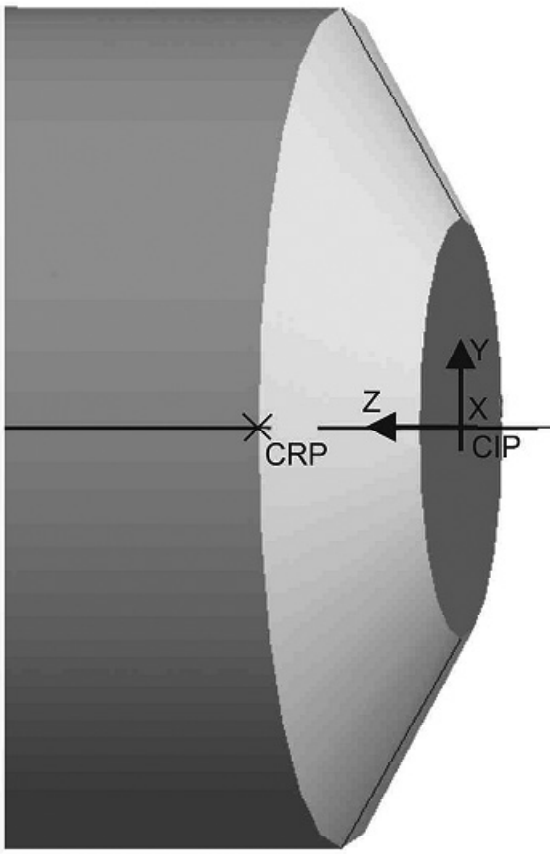

Figure 5 — Position of the CRP cutting reference point

4 Design of the model

4.1 General

Sketches and contours of the crude geometry do not contain any details, such as grooves, chamfers or rounding. These details shall be designed as separate design features, after the design of the crude geometry and are, therefore, named precision geometry.

The order of the structure of the model depends on the state of the technology of the CAD system. It shall be waived on references between the design components of the cutting and non-cutting part.

Drilling and countersinking tools with non-replaceable cutting edges shall be built as rotational symmetric design elements based on properties in accordance with ISO/TS 13399-3:

— geometry of the non-cutting part, including the connection interface, if applicable;

— geometry of the cutting part.

NOTE 1 Both these geometrical parts are coloured as described in Clause 18.

NOTE 2 The totality of design elements is focused on the depth of modelling and the complexity of the cutting tool.

The following subclauses describe the specified structure of the model of the defined basic shapes of drilling and countersinking tools .

The section of “CUT” area ends at the LUP, if the LCF is larger than the LU, and ends at the LCFP, if the usable length is larger than the LCF.

© ISO 2013 – All rights reserved

Documents
Document Sharing Hub
Full document details: PD ISO/TS 13399-302:2013

Examples of the design of different tool types are shown with a cylindrical shank or circular bore representing the connection interface feature.

4.2 Necessary parameters for the connection interface feature

Information about the connection interface code shall be filed as properties within the model and named as parameters as indicated in Table 1:

Table 1 — Parameter list for connection interface feature

Preferred symbol	Description	Source of symbol	ISO-ID number
CCMS	connection code machine side	ISO/TS 13399-3 and ISO/TS 13399–4	71D102AE3B252
CCTMS	connection code type machine side	ISO/TS 13399-60 short name of subtype of connection_interface_feature	feature_class
CCFMS	connection code form machine side	ISO/TS 13399-60 number of the variant of the subtype of connection_interface_feature	feature_class
CZCMS	connection size code machine side	connection size code (dependent on side)	71FC193318002

The information above and other relevant properties shall be incorporated into the model as parameters or else recorded as a separate file.

5 Twist drill

5.1 General

Figure 6 shows the properties used for identification and classification of twist drills.

© ISO 2013 – All rights reserved
Documents
Document Sharing Hub
Full document details: PD ISO/TS 13399-302:2013

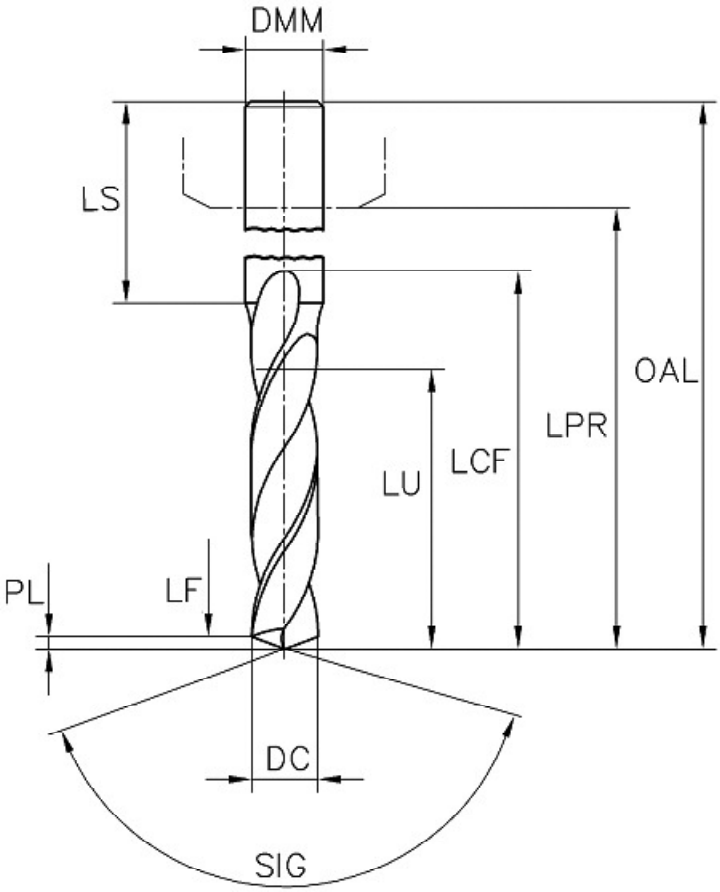

Figure 6 — Solid drill — Determination of properties

5.2 Necessary properties

Table 2 shows the properties needed for the modelling of a twist drill

Table 2 — Properties for the modelling of a twist drill

Preferred name	Preferred symbol
cutting diameter	DC
protruding length	LPR
usable length	LU
overall length	OAL
length chip flute	LCF
point length	PL
functional length	LF
connection thread nominal size machine side	THSZMS
shank diameter	DMM
shank length	LS
point angle	SIG

The properties LPR and LF shall be employed in the parameter list of the model, if they are well defined.

© ISO 2013 – All rights reserved

Documents
Document Sharing Hub
Full document details: PD ISO/TS 13399-302:2013

The property "PL" can be calculated from a function using the terms DMM and SIG terms, but for practical reasons, this property shall be used as a reference dimension.

5.3 Geometry of the non-cutting part including the connection

The basis of this part is a rotational design feature, containing all elements between the TEPand LUP planes.

The sketch includes all the elements indicated in Figure 7 and shall be designed on the YZ plane of the PCS. The rotational axis is the standard z-axis.

Design of the sketch:

— the sketch shall be determined as a half section;

— the sketch shall be constrained to the coordinate system PCS and to the planes TEP and LUP according to Figure 7. If the CAD software does not support the use of datum planes, the sketch shall be fully dimensioned; otherwise, the distances shall be in conjunction with the defined datum planes;

— dimensioning shall be done with the appropriate properties listed in Table 2.

The sketch shall be rotated about the Z-axis through 360°.

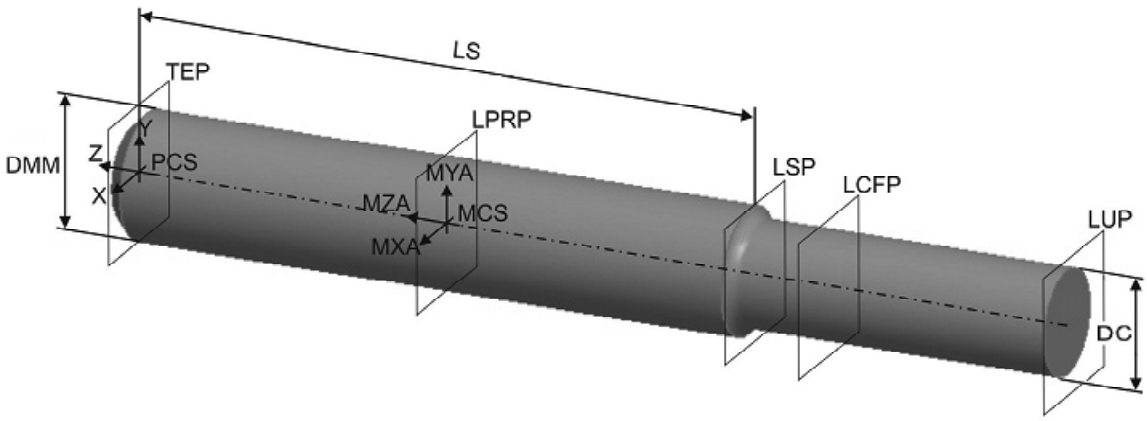

Figure 7 — Twist drill — Non-cutting part including the connection

5.4 Geometry of the cutting part

The geometry of the cutting part shall be designed as a sketch in the front view YZ plane of the PCS with reference to the CIP and the LUP.

The rotational axis is the standard Z-axis.

Design of the sketch:

— the sketch shall be determined as a half section; see Figure 8;

— the tip angle shall be defined as the point angle "SIG" and recorded as this value;

— the sketch shall be constrained to the CIP, to planes PLP and LUP according to Figures 8 and 9. If the CAD software does not support the use of datum planes, the sketch shall be fully dimensioned; otherwise, distances shall be in conjunction with the defined datum planes;

— Dimensioning shall be done with the appropriate properties listed in Table 1.

The sketch shall be rotated about the Z-axis through 360°.

© ISO 2013 – All rights reserved
Documents
Document Sharing Hub
Full document details: PD ISO/TS 13399-302:2013