PD ISO/TS 13399-304:2016

BSI Standards Publication

Cutting tool data representation and exchange

Part 304: Creation and exchange of 3D models — Solid milling cutters with arbor hole

bsi.

...making excellence a habit.™

Document Sharing Hub

Full document details: PD ISO/TS 13399-304:2016

National foreword

This Published Document is the UK implementation of ISO/TS 13399-304:2016.

The UK participation in its preparation was entrusted to Technical Committee MTE/18, Tools tips and inserts for cutting applications.

A list of organizations represented on this committee can be obtained on request to its secretary.

This publication does not purport to include all the necessary provisions of a contract. Users are responsible for its correct application.

© The British Standards Institution 2016. Published by BSI Standards Limited 2016

ISBN 978 0 580 92389 0

ICS 25.100.01; 35.240.50

Compliance with a British Standard cannot confer immunity from legal obligations.

This Published Document was published under the authority of the Standards Policy and Strategy Committee on 29 February 2016.

Amendments issued since publication

Date	Text affected

Documents
Document Sharing Hub

Full document details: PD ISO/TS 13399-304:2016

TECHNICAL SPECIFICATION

ISO/TS 13399-304

First edition
2016-02-01

Cutting tool data representation and exchange —

Part 304: Creation and exchange of 3D models — Solid milling cutters with arbor hole

Représentation et échange des données relatives aux outils coupants —

Partie 304: Création et échange de modèles 3D — Fraises monobloc à trou central

Reference number
ISO/TS 13399-304:2016(E)

Documents
Document Sharing Hub

© ISO 2016

Full document details: PD ISO/TS 13399-304:2016

COPYRIGHT PROTECTED DOCUMENT

© ISO 2016, Published in Switzerland

All rights reserved. Unless otherwise specified, no part of this publication may be reproduced or utilized otherwise in any form or by any means, electronic or mechanical, including photocopying, or posting on the internet or an intranet, without prior written permission. Permission can be requested from either ISO at the address below or ISO's member body in the country of the requester.

ISO copyright office
Ch. de Blandonnet 8 • CP 401
CH-1214 Vernier, Geneva, Switzerland
Tel. +41 22 749 01 11
Fax +41 22 749 09 47
copyright@iso.org
www.iso.org

© ISO 2016 – All rights reserved

Documents
Document Sharing Hub

Full document details: PD ISO/TS 13399-304:2016

Contents

Page

Foreword ..... **v**

Introduction ..... **vii**

1 Scope **1**

2 Normative references **1**

3 Starting elements, coordinate systems, planes **2**
3.1 General 2
3.2 Reference system 2
3.3 Coordinate system at the cutting part 3
3.4 Planes 3
3.5 Cutting reference point (CRP) 4

4 Design of the model **5**
4.1 Necessary properties for the connection interface feature 5

5 Plain milling cutter **6**
5.1 General 6
5.2 Necessary properties 6
5.3 Geometry of the non-cutting part inclusive of the connection 7
5.4 Geometry of the cutting part 9
5.5 Plain milling cutter, complete 9

6 Shell mill **9**
6.1 General 9
6.2 Necessary properties 10
6.3 Geometry of the non-cutting part inclusive of the connection 10
6.4 Geometry of the cutting part 10
6.5 Shell mill, complete 10

7 Thread milling cutter **11**
7.1 General 11
7.2 Necessary properties 11
7.3 Geometry of the non-cutting part inclusive of the connection 12
7.4 Geometry of the cutting part 12
7.5 Thread milling cutter, complete 12

8 Slotting cutter **12**
8.1 General 12
8.2 Necessary properties 13
8.3 Geometry of the non-cutting part inclusive of the connection 13
8.4 Geometry of the cutting part 13
8.5 Slotting cutter, complete 14

9 Pointed profile slotting cutter **14**
9.1 General 14
9.2 Necessary properties 15
9.3 Geometry of the non-cutting part inclusive of the connection 15
9.4 Geometry of the cutting part 16
9.5 Pointed profile slotting cutter 16

10 Flatted profile slotting cutter **16**
10.1 General 16
10.2 Necessary properties 17
10.3 Geometry of the non-cutting part inclusive of the connection 18
10.4 Geometry of the cutting part 18
10.5 Flatted profile slotting cutter, complete 18

11 Concave profile cutter **18**
11.1 General 18

AVA Documents
Document Sharing Hub

© ISO 2016 – All rights reserved

Full document details: PD ISO/TS 13399-304:2016

11.2 Necessary properties ... 19
11.3 Geometry of the non-cutting part inclusive of the connection ... 19
11.4 Geometry of the cutting part ... 20
11.5 Concave profile cutter, complete ... 20

12 Convex profile cutter ... 20
12.1 General ... 20
12.2 Necessary properties ... 21
12.3 Geometry of the non-cutting part inclusive of the connection ... 21
12.4 Geometry of the cutting part ... 21
12.5 Convex profile cutter, complete ... 21

13 Corner-rounding cutter ... 22
13.1 General ... 22
13.2 Necessary properties ... 23
13.3 Geometry of the non-cutting part inclusive of the connection ... 23
13.4 Geometry of the cutting part ... 23
13.5 Corner-rounding cutter, complete ... 23

14 Angular milling cutter ... 24
14.1 General ... 24
14.2 Necessary properties ... 24
14.3 Geometry of the non-cutting part inclusive of the connection ... 25
14.4 Geometry of the cutting part ... 25
14.5 Angular milling cutter, complete ... 25

15 Angular profile milling cutter ... 26
15.1 General ... 26
15.2 Necessary properties ... 26
15.3 Geometry of the non-cutting part inclusive of the connection ... 27
15.4 Geometry of the cutting part ... 27
15.5 Angular profile milling cutter, complete ... 27

16 Sawing blade ... 27
16.1 General ... 27
16.2 Necessary properties ... 28
16.3 Geometry of the non-cutting part inclusive of the connection ... 28
16.4 Geometry of the cutting part ... 28
16.5 Sawing blade, complete ... 28

17 Design of details ... 29
17.1 Basics for modelling ... 29
17.2 Contact surfaces, driving features — Orientation ... 29

18 Attributes of surfaces — Visualization of the model features ... 29

19 Structure of the design elements (tree of model) ... 29

20 Data exchange model ... 30

Annex A (informative) **Information about nominal dimensions ... 32**

Bibliography ... 33

© ISO 2016 – All rights reserved

Documents
Document Sharing Hub
Full document details: PD ISO/TS 13399-304:2016

Foreword

ISO (the International Organization for Standardization) is a worldwide federation of national standards bodies (ISO member bodies). The work of preparing International Standards is normally carried out through ISO technical committees. Each member body interested in a subject for which a technical committee has been established has the right to be represented on that committee. International organizations, governmental and non-governmental, in liaison with ISO, also take part in the work. ISO collaborates closely with the International Electrotechnical Commission (IEC) on all matters of electrotechnical standardization.

The procedures used to develop this document and those intended for its further maintenance are described in the ISO/IEC Directives, Part 1. In particular the different approval criteria needed for the different types of ISO documents should be noted. This document was drafted in accordance with the editorial rules of the ISO/IEC Directives, Part 2 (see www.iso.org/directives).

Attention is drawn to the possibility that some of the elements of this document may be the subject of patent rights. ISO shall not be held responsible for identifying any or all such patent rights. Details of any patent rights identified during the development of the document will be in the Introduction and/or on the ISO list of patent declarations received (see www.iso.org/patents).

Any trade name used in this document is information given for the convenience of users and does not constitute an endorsement.

For an explanation on the meaning of ISO specific terms and expressions related to conformity assessment, as well as information about ISO's adherence to the WTO principles in the Technical Barriers to Trade (TBT) see the following URL: Foreword - Supplementary information

The committee responsible for this document is ISO/TC 29, *Small tools*.

ISO/TS 13399 consists of the following parts, under the general title *Cutting tool data representation and exchange*:

— *Part 1: Overview, fundamental principles and general information model*

— *Part 2: Reference dictionary for the cutting items* [Technical Specification]

— *Part 3: Reference dictionary for tool items* [Technical Specification]

— *Part 4: Reference dictionary for adaptive items* [Technical Specification]

— *Part 5: Reference dictionary for assembly items* [Technical Specification]

— *Part 50: Reference dictionary for reference systems and common concepts* [Technical Specification]

— *Part 60: Reference dictionary for connection systems* [Technical Specification]

— *Part 80: Creation and exchange of 3D models — Overview and principles* [Technical Specification]

— *Part 100: Definitions, principles and methods for reference dictionaries* [Technical Specification]

— *Part 150: Usage guidelines* [Technical Specification]

— *Part 201: Creation and exchange of 3D models — Regular inserts* [Technical Specification]

— *Part 202: Creation and exchange of 3D models — Irregular inserts* [Technical Specification]

— *Part 203: Creation and exchange of 3D models — Replaceable inserts for drilling* [Technical Specification]

— *Part 204: Creation and exchange of 3D models — Inserts for reaming* [Technical Specification]

— *Part 301: Concept for the design of 3D models based on properties according to ISO/TS 13399-3: Modelling of thread-cutting taps, thread-forming taps and thread-cutting dies* [Technical Specification]

AVA Documents
Document Sharing Hub

© ISO 2016 – All rights reserved

Full document details: PD ISO/TS 13399-304:2016

— *Part 302: Concept for the design of 3D models based on properties according to ISO/TS 13399-3: Modelling of solid drills and countersinking tools* [Technical Specification]

— *Part 303: Concept for the design of 3D models based on properties according to ISO/TS 13399-3: Modelling of end mills with solid cutting edges* [Technical Specification]

— *Part 304: Concept for the design of 3D models based on properties according to ISO/TS 13399-3: Modelling of milling cutters with arbor hole and solid cutting edges* [Technical Specification]

— *Part 307: Creation and exchange of 3D models — End mills for indexable inserts* [Technical Specification]

— *Part 308: Creation and exchange of 3D models — Milling cutters with arbor hole for indexable inserts* [Technical Specification]

— *Part 309: Creation and exchange of 3D models — Tool holders for indexable inserts* [Technical Specification]

— *Part 311: Creation and exchange of 3D models — Solid reamers* [Technical Specification]

— *Part 312: Creation and exchange of 3D models — Reamers for indexable inserts* [Technical Specification]

— *Part 401: Creation and exchange of 3D models — Converting, extending and reducing adaptive items* [Technical Specification]

— *Part 405: Creation and exchange of 3D models — Collets* [Technical Specification]

The following parts are under preparation:

— *Part 70: Graphical data layout — Layer settings for tool designs* [Technical Specification]

— *Part 71: Graphical data layout — Creation of documents for the standardized data exchange — Graphical product information* [Technical Specification]

— *Part 72: Creation of documents for the standardized data exchange — Definition of properties for drawing header and their XML-data exchange* [Technical Specification]

— *Part 305: Creation and exchange of 3D models — Modular tooling systems with adjustable cartridges for boring* [Technical Specification]

— *Part 310: Creation and exchange of 3D models — Turning tools with carbide tips* [Technical Specification]

© ISO 2016 – All rights reserved
Documents
Document Sharing Hub
Full document details: PD ISO/TS 13399-304:2016

Introduction

This part of ISO/TS 13399 defines the concept, the terms and the definitions on how to design simplified 3D models of milling cutters with arbor hole and non-indexable cutting edges that can be used for NC-programming, simulation of the manufacturing processes and the determination of collision within machining processes. It is not intended to standardize the design of the cutting tool itself.

A cutting tool is used in a machine to remove material from a workpiece by a shearing action at the cutting edges of the tool. Cutting tool data that can be described by ISO/TS 13399 (all parts) include, but are not limited to, everything between the workpiece and the machine tool. Information about inserts, solid tools, assembled tools, adaptors, components and their relationships can be represented by ISO/TS 13399 (all parts). The increasing demand providing the end user with 3D models for the purposes defined above is the basis for the development of this series of International Standards.

The objective of ISO/TS 13399 (all parts) is to provide the means to represent the information that describes cutting tools in a computer-sensible form that is independent from any particular computer system. The representation will facilitate the processing and exchange of cutting tool data within and between different software systems and computer platforms and support the application of this data in manufacturing planning, cutting operations and the supply of tools. The nature of this description makes it suitable not only for neutral file exchange, but also as a basis for implementing and sharing product databases and for archiving. The methods that are used for these representations are those developed by ISO/TC 184/SC 4 for the representation of product data by using standardized information models and reference dictionaries.

Definitions and identifications of dictionary entries are defined by means of standard data that consist of instances of the EXPRESS entity data types defined in the common dictionary schema, resulting from a joint effort between ISO/TC 184/SC 4 and IEC/TC 3/SC 3D and in its extensions defined in ISO 13584-24 and ISO 13584-25.

© ISO 2016 – All rights reserved

Documents
Document Sharing Hub
Full document details: PD ISO/TS 13399-304:2016

Documents
Document Sharing Hub

Cutting tool data representation and exchange —

Part 304: Creation and exchange of 3D models — Solid milling cutters with arbor hole

1 Scope

This part of ISO/TS 13399 specifies a concept for the design of tool items, limited to any kind of milling cutters with arbor hole and non-indexable cutting edges, together with the usage of the related properties and domains of values.

This part of ISO/TS 13399 specifies a common way of design simplified models that contain the following:

— definitions and identifications of the design features of milling cutters with arbor hole and non-indexable cutting edges, with an association to the used properties;

— definitions and identifications of the internal structure of the 3D model that represents the features and the properties of milling cutters with arbor hole and non-indexable cutting edges.

The following are outside the scope of this part of ISO/TS 13399:

— applications where these standard data may be stored or referenced;

— concept of 3D models for cutting tools;

— concept of 3D models for cutting items;

— concept of 3D models for other tool items not being described in the scope of this part of ISO/TS 13399;

— concept of 3D models for adaptive items;

— concept of 3D models for assembly items and auxiliary items.

2 Normative references

The following documents, in whole or in part, are normatively referenced in this document and are indispensable for its application. For dated references, only the edition cited applies. For undated references, the latest edition of the referenced document (including any amendments) applies.

ISO/TS 13399-3, *Cutting tool data representation and exchange — Part 3: Reference dictionary for tool items*

ISO/TS 13399-4, *Cutting tool data representation and exchange — Part 4: Reference dictionary for adaptive items*

ISO/TS 13399-60, *Cutting tool data representation and exchange — Part 60: Reference dictionary for connection systems*

ISO/TS 13399-80, *Cutting tool data representation and exchange — Part 80: Creation and exchange of 3D models — Overview and principles*

© ISO 2016 – All rights reserved

Documents
Document Sharing Hub

Full document details: PD ISO/TS 13399-304:2016

3 Starting elements, coordinate systems, planes

3.1 General

The modelling of the 3D models shall be done by means of nominal dimensions.

WARNING — There is no guarantee that the 3D model, created according to the methods described in this part of ISO/TS 13399, is a true representation of the physical tool supplied by the tool manufacturer. If the models are used for simulation purposes, e.g. CAM simulation, it shall be taken into consideration that the real product dimension can differ from those nominal dimensions.

NOTE Some definitions are taken from ISO/TS 13399-50.

3.2 Reference system

The reference system (see Figure 1) consists of the following standard elements:

— standard coordinate system

right-handed rectangular Cartesian system in three-dimensional space called “primary coordinate system” (PCS);

— three orthogonal planes

planes in the coordinate system that contain the axis of the system, named “xy-plane” (XYP), “xz-plane” (XZP) and “yz-plane” (YZP);

— three orthogonal axis

axes built as intersections of the three orthogonal planes lines respectively, named “x-axis” (XA), “y-axis” (YA) and “z-axis” (ZA).

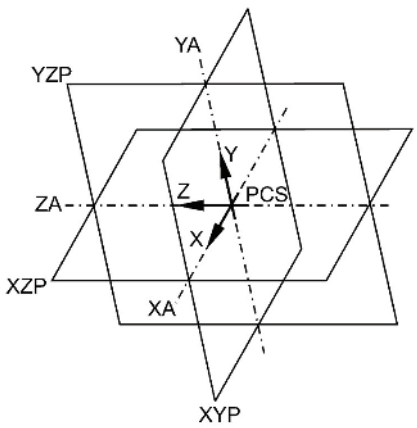

Figure 1 — Reference system

For virtually mounting of milling cutters onto an adaptive item, an additional reference system shall be defined. This reference system is called “mounting coordinate system” (MCS). It is located at the starting point of the protruding length of a tool item. The orientation is shown in Figure 2.

© ISO 2016 – All rights reserved
Documents
Document Sharing Hub
Full document details: PD ISO/TS 13399-304:2016

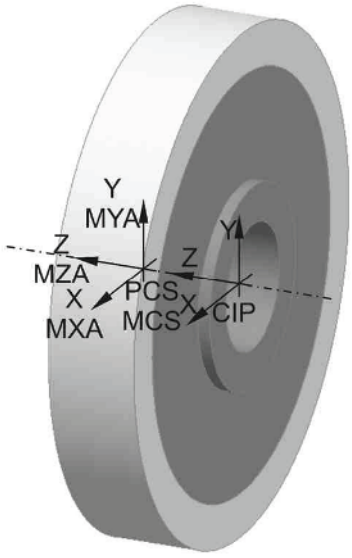

Figure 2 — Orientation of "PCS" and "MCS" reference system (example)

3.3 Coordinate system at the cutting part

The coordinate system at the cutting part shown in Figure 3, e.g. the front face, named "coordinate system in process" (CIP) with a defined distance to the PCS, shall be oriented as follows:

— z-axis of CIP points to the PCS;

— z-axis of CIP is collinear to the z-axis of PCS;

— y-axis of CIP is parallel to the y-axis of PCS.

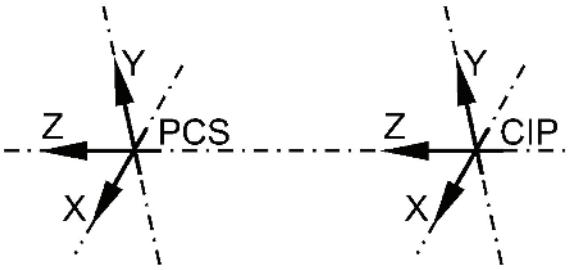

Figure 3 — Orientation of CIP

If the 3D modelling software gives the possibility to include interfaces for components to, for example, mount a face cutting part onto a complete cutting tool, it shall be advised to use the coordinate system "CIP".

If necessary, another designation can be given to the interface of the component (dependent on the software). The name is "CSIF" (for "coordinate system interface") and includes the coordinate system "CIP".

3.4 Planes

The modelling shall take place based on planes according to Figure 4, which shall be used as reference, if applicable. Therefore, it is ensured to be able to vary the model or to suppress single features of

© ISO 2016 – All rights reserved

AVA Documents Document Sharing Hub
Full document details: PD ISO/TS 13399-304:2016

independent design features by means of changing the value of one or more parameter of the model design. Furthermore, the identification of the different areas shall be simplified by using the plane concept, even if they contact each other with the same size, e.g. chip flute, shank and etc.

For the 3D visualization of milling cutter with arbor hole and non-indexable cutting edges, the planes shall be determined by the following and shown in Figure 4:

— "CWP" plane for the cutting width (CW), based on "CIP"; the distance of CWP to CIP shall be taken from the property "CW" or "CWN" if the cutting width is adjustable;

— "HEP" (head end plane) plane for the overall length (OAL), based on "PCS";

— "LCCBP" plane for the counter bore depth of a connection bore (LCCB), based on "CIP";

— "LCCP" plane for the distance of the cutting corner (distance cutting corner) of a profiled milling cutter, based on "CIP";

— "TEP" (tool end plane) plane that is the base of any other planes, located at origin of PCS.

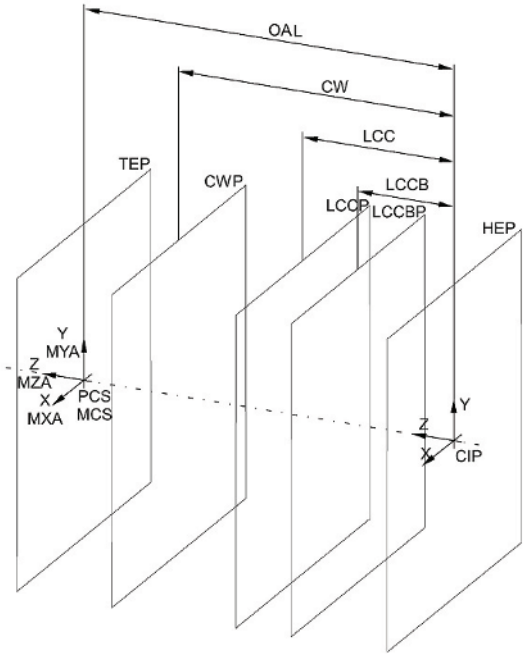

Figure 4 — Planes for design

3.5 Cutting reference point (CRP)

For the design, the cutting reference point shall be defined. The point is defined as the theoretical cutting edge in the XZ plane of the "PCS". Therefore, it is always referenced to the cutting diameter as shown in Figure 5.

© ISO 2016 – All rights reserved
Documents
Document Sharing Hub
Full document details: PD ISO/TS 13399-304:2016