PD ISO/TS 13399-305:2017

BSI Standards Publication

Cutting tool data representation and exchange

Part 305: Creation and exchange of 3D models — Modular tooling systems with adjustable cartridges for boring

Documents
Document Sharing Hub

Full document details: PD ISO/TS 13399-305:2017

National foreword

This Published Document is the UK implementation of ISO/TS 13399-305:2017.

The UK participation in its preparation was entrusted to Technical Committee MTE/18, Tools tips and inserts for cutting applications.

A list of organizations represented on this committee can be obtained on request to its secretary.

This publication does not purport to include all the necessary provisions of a contract. Users are responsible for its correct application.

© The British Standards Institution 2017.
Published by BSI Standards Limited 2017

ISBN 978 0 580 92986 1
ICS 25.100.01; 35.240.50

Compliance with a British Standard cannot confer immunity from legal obligations.

This Published Document was published under the authority of the Standards Policy and Strategy Committee on 31 January 2017.

Amendments/corrigenda issued since publication

Date	Text affected

Documents
Document Sharing Hub

Full document details: PD ISO/TS 13399-305:2017

TECHNICAL SPECIFICATION

ISO/TS 13399-305

First edition
2017-01

Cutting tool data representation and exchange —

Part 305: Creation and exchange of 3D models — Modular tooling systems with adjustable cartridges for boring

Représentation et échange des données relatives aux outils coupants —

Partie 305: Création et échange des modèles 3D — Systèmes d'outils modulables avec cartouches réglables pour alésage

Reference number
ISO/TS 13399-305:2017(E)

Documents
Document Sharing Hub

© ISO 2017

Full document details: PD ISO/TS 13399-305:2017

COPYRIGHT PROTECTED DOCUMENT

© ISO 2017, Published in Switzerland

All rights reserved. Unless otherwise specified, no part of this publication may be reproduced or utilized otherwise in any form or by any means, electronic or mechanical, including photocopying, or posting on the internet or an intranet, without prior written permission. Permission can be requested from either ISO at the address below or ISO's member body in the country of the requester.

ISO copyright office
Ch. de Blandonnet 8 • CP 401
CH-1214 Vernier, Geneva, Switzerland
Tel. +41 22 749 01 11
Fax +41 22 749 09 47
copyright@iso.org
www.iso.org

© ISO 2017 – All rights reserved

Documents
Document Sharing Hub

Full document details: PD ISO/TS 13399-305:2017

Contents

Page

Foreword ... **vi**
Introduction ... **vii**
1 Scope ... **1**
2 Normative references ... **1**
3 Terms and definitions ... **2**
4 Starting elements, coordinate systems, planes ... **2**
4.1 General ... 2
4.2 Reference system ... 2
4.3 Mounting coordinate system ... 3
4.4 Coordinate system at the cutting part ... 4
4.5 Planes ... 5
4.6 Adjustment coordinate system on workpiece side ... 6
4.6.1 General ... 6
4.6.2 Designation of the coordinate system workpiece side ... 7
4.6.3 Arrangement of coordinate system workpiece side ... 8
4.7 Design of the pocket seat and cutting reference point (CRP) of the insert ... 9
5 Design of the model ... **13**
5.1 General ... 13
5.2 Necessary parameters for the connection interface feature ... 13
5.3 Necessary properties for insert and pocket seat ... 14
5.3.1 General ... 14
5.3.2 Properties for equilateral, equiangular and equilateral, non-equiangular inserts ... 14
5.3.3 Properties for non-equilateral, equiangular and non-equilateral, non-equiangular inserts ... 15
5.3.4 Properties for round inserts ... 15
5.3.5 Design of the pocket seat feature ... 16
6 Basic shapes for extension bridges, adjustment and assembly parts ... **16**
6.1 Monoblock extension bridges with adaptor ... 16
6.1.1 General ... 16
6.1.2 Necessary properties ... 16
6.1.3 Basic geometry ... 17
6.2 Bridge tool adapter ... 19
6.2.1 General ... 19
6.2.2 Necessary properties ... 19
6.2.3 Basic geometry ... 19
6.3 Bridge tool ... 20
6.3.1 General ... 20
6.3.2 Necessary properties ... 21
6.3.3 Basic geometry ... 21
6.4 Slide for adjustable units ... 22
6.4.1 General ... 22
6.4.2 Necessary properties ... 22
6.4.3 Basic geometry of slides for adjustable units ... 22
6.5 Slide element ... 23
6.5.1 General ... 23
6.5.2 Necessary properties ... 24
6.5.3 Basic geometry of slide elements ... 24
6.6 Balance weight ... 25
6.6.1 General ... 25
6.6.2 Necessary properties ... 26
6.6.3 Basic geometry of balance weights ... 26

AVA Documents
Document Sharing Hub

© ISO 2017 – All rights reserved

Full document details: PD ISO/TS 13399-305:2017

7 Basic shapes for cartridges and insert holders ... 27
7.1 Adjustable unit ... 27
7.1.1 General ... 27
7.1.2 Necessary properties ... 28
7.1.3 Basic geometry of adjustable units ... 28
7.2 Boring head for adjustable units ... 29
7.2.1 General ... 29
7.2.2 Necessary properties ... 30
7.2.3 Basic geometry of boring heads for adjustable units ... 30

8 Basic shapes of rotating boring systems ... 31
8.1 General ... 31
8.2 Assembled single-point bridge tool ... 31
8.2.1 General ... 31
8.2.2 Necessary properties ... 32
8.2.3 Assembled model of single-point bridge tool ... 33
8.3 Assembled single-point bridge tool for reverse internal operations ... 35
8.3.1 General ... 35
8.3.2 Necessary properties ... 36
8.3.3 Assembled model of single-point bridge tool for reverse operations ... 36
8.4 Assembled multi-point bridge tool ... 37
8.4.1 General ... 37
8.4.2 Necessary properties ... 38
8.4.3 Assembled model of multi-point bridge tool ... 39
8.5 Assembled single-point bridge tool for external operations ... 40
8.5.1 General ... 40
8.5.2 Necessary properties ... 40
8.5.3 Assembled model of single-point bridge tool for external operations ... 41
8.6 Assembled multi-point bridge tool for external operations ... 42
8.6.1 General ... 42
8.6.2 Necessary properties ... 43
8.6.3 Assembled model of a multi-point bridge tool for external operations ... 43
8.7 Single-point bridge tool for axial grooving ... 44
8.7.1 General ... 44
8.7.2 Necessary properties ... 45
8.7.3 Assembled model of single-point bridge tool for axial grooving ... 46
8.8 Assembled multi-point bridge tool for axial grooving ... 47
8.8.1 General ... 47
8.8.2 Necessary properties ... 47
8.8.3 Assembled model of multi-point bridge tool for axial grooving ... 47
8.9 Boring head ... 48
8.9.1 General ... 48
8.9.2 Necessary properties ... 49
8.9.3 Assembled model of boring head ... 49
8.10 Fine boring head with boring bar ... 50
8.10.1 General ... 50
8.10.2 Necessary properties ... 50
8.10.3 Assembled model of fine boring head with boring bar ... 51
8.11 Boring head with adjustable unit ... 52
8.11.1 General ... 52
8.11.2 Necessary properties ... 52
8.11.3 Assembled model of boring head with adjustable unit ... 53

9 Design of details ... 54
9.1 Basis for modelling ... 54
9.2 Fixing threads for inserts ... 54
9.3 Contact/clamping surfaces — Orientation ... 54
9.4 Chamfers and roundings ... 54

10 Attributes of surfaces — Visualization of model features ... 55

© ISO 2017 – All rights reserved
Documents
Document Sharing Hub
Full document details: PD ISO/TS 13399-305:2017

11 Data exchange model **55**
Annex A (informative) **Information about nominal dimensions** **67**
Annex B (informative) **STP structure** **68**
Bibliography **73**

© ISO 2017 – All rights reserved

Documents
Document Sharing Hub
Full document details: PD ISO/TS 13399-305:2017

Foreword

ISO (the International Organization for Standardization) is a worldwide federation of national standards bodies (ISO member bodies). The work of preparing International Standards is normally carried out through ISO technical committees. Each member body interested in a subject for which a technical committee has been established has the right to be represented on that committee. International organizations, governmental and non-governmental, in liaison with ISO, also take part in the work. ISO collaborates closely with the International Electrotechnical Commission (IEC) on all matters of electrotechnical standardization.

The procedures used to develop this document and those intended for its further maintenance are described in the ISO/IEC Directives, Part 1. In particular the different approval criteria needed for the different types of ISO documents should be noted. This document was drafted in accordance with the editorial rules of the ISO/IEC Directives, Part 2 (see www.iso.org/directives).

Attention is drawn to the possibility that some of the elements of this document may be the subject of patent rights. ISO shall not be held responsible for identifying any or all such patent rights. Details of any patent rights identified during the development of the document will be in the Introduction and/or on the ISO list of patent declarations received (see www.iso.org/patents).

Any trade name used in this document is information given for the convenience of users and does not constitute an endorsement.

For an explanation on the meaning of ISO specific terms and expressions related to conformity assessment, as well as information about ISO's adherence to the World Trade Organization (WTO) principles in the Technical Barriers to Trade (TBT) see the following URL: www.iso.org/iso/foreword.html.

The committee responsible for this document is ISO/TC 29, *Small tools*.

A list of all parts in the ISO 13399 series can be found on the ISO website.

© ISO 2017 – All rights reserved
Documents
Document Sharing Hub
Full document details: PD ISO/TS 13399-305:2017

Introduction

This document defines the concept, the terms and the definitions of how to design simplified 3D models of modular tooling systems with adjustable cartridges for boring that can be used for NC-programming, simulation of the manufacturing processes and the determination of collision within machining processes. It is not intended to standardize the design of the cutting tool itself.

A cutting tool is used in a machine to remove material from a workpiece by a shearing action at the cutting edges of the tool. Cutting tool data that can be described by ISO 13399 include, but are not limited to, everything between the workpiece and the machine tool. Information about inserts, solid tools, assembled tools, adaptors, components and their relationships can be represented by this document. The increasing demand providing the end user with 3D models for the purposes defined above is the basis for the development of the ISO 13399 series.

The objective of ISO 13399 series is to provide the means to represent the information that describes cutting tools in a computer sensible form that is independent from any particular computer system. The representation will facilitate the processing and exchange of cutting tool data within and between different software systems and computer platforms and support the application of this data in manufacturing planning, cutting operations and the supply of tools. The nature of this description makes it suitable not only for neutral file exchange, but also as a basis for implementing and sharing product databases and for archiving. The methods that are used for these representations are those developed by ISO/TC 184/SC 4 for the representation of product data by using standardized information models and reference dictionaries.

Definitions and identifications of dictionary entries are defined by means of standard data that consist of instances of the EXPRESS entity data types defined in the common dictionary schema, resulting from a joint effort between ISO/TC 184/SC 4 and IEC/TC 3/SC 3D, and in its extensions defined in ISO 13584-24 and ISO 13584-25.

© ISO 2017 – All rights reserved

Documents
Document Sharing Hub
Full document details: PD ISO/TS 13399-305:2017

Documents
Document Sharing Hub

Cutting tool data representation and exchange —

Part 305: Creation and exchange of 3D models — Modular tooling systems with adjustable cartridges for boring

1 Scope

This document specifies a concept for the design of tool items, for all kinds of modular tooling systems with adjustable cartridges for boring, together with the usage of the related properties and domains of values.

This document specifies a common way of designing simplified models that contain the following:

— definitions and identifications of the design features of modular tooling systems with adjustable cartridges for boring, with an association to the used properties;

— definitions and identifications of the internal structure of the 3D model that represents the features and the properties of modular tooling systems with adjustable cartridges for boring.

The following are outside the scope of this document:

a) applications where these standard data may be stored or referenced;

b) concept of 3D models for cutting tools;

c) concept of 3D models for cutting items;

d) concept of 3D models for other tool items not being described in the scope of this document;

e) concept of 3D models for adaptive items;

f) concept of 3D models for assembly items and auxiliary items.

2 Normative references

The following documents are referred to in the text in such a way that some or all of their content constitutes requirements of this document. For dated references, only the edition cited applies. For undated references, the latest edition of the referenced document (including any amendments) applies.

ISO/TS 13399-50, *Cutting tool data representation and exchange — Part 50: Reference dictionary for reference systems and common concepts*

ISO/TS 13399-80, *Cutting tool data representation and exchange — Part 80: Creation and exchange of 3D models — Overview and principles*

ISO/TS 13399-201, *Cutting tool data representation and exchange — Part 201: Creation and exchange of 3D models — Regular inserts*

ISO/TS 13399-202, *Cutting tool data representation and exchange — Part 202: Creation and exchange of 3D models — Irregular inserts*

© ISO 2017 – All rights reserved

Documents
Document Sharing Hub

Full document details: PD ISO/TS 13399-305:2017

3 Terms and definitions

No terms and definitions are listed in this document.

ISO and IEC maintain terminological databases for use in standardization at the following addresses:

— IEC Electropedia: available at http://www.electropedia.org/

— ISO Online browsing platform: available at http://www.iso.org/obp

4 Starting elements, coordinate systems, planes

4.1 General

The modelling of the 3D models shall be done by means of nominal dimensions. Some examples of nominal dimensions are given in Annex A.

WARNING — There is no guarantee that the 3D model, created according to the methods described in this document, is a true representation of the physical tool supplied by the tool manufacturer. If the models are used for simulation purposes, e.g. CAM simulation, it shall be taken into consideration that the real product dimensions can differ from those nominal dimensions.

NOTE 1 Some of the definitions have been taken from ISO/TS 13399-50.

NOTE 2 ISO 10303-242 (STEP 3D) allow to write sub-assemblies as separate STEP 3D files.

4.2 Reference system

The reference system shall consist of the following standard elements as shown in Figure 1:

— **standard coordinate system**: right-handed rectangular Cartesian system in three-dimensional space, called “primary coordinate system” (PCS);

— **three orthogonal planes**: planes in the coordinate system that contain the axis of the system, named “XY-plane” (XYP), “XZ-plane” (XZP) and “YZ-plane” (YZP);

— **three orthogonal axis**: axes built as intersections of the three orthogonal plane lines respectively, named “X-axis” (XA), “Y-axis” (YA) and “Z-axis” (ZA).

© ISO 2017 – All rights reserved
Documents
Document Sharing Hub
Full document details: PD ISO/TS 13399-305:2017

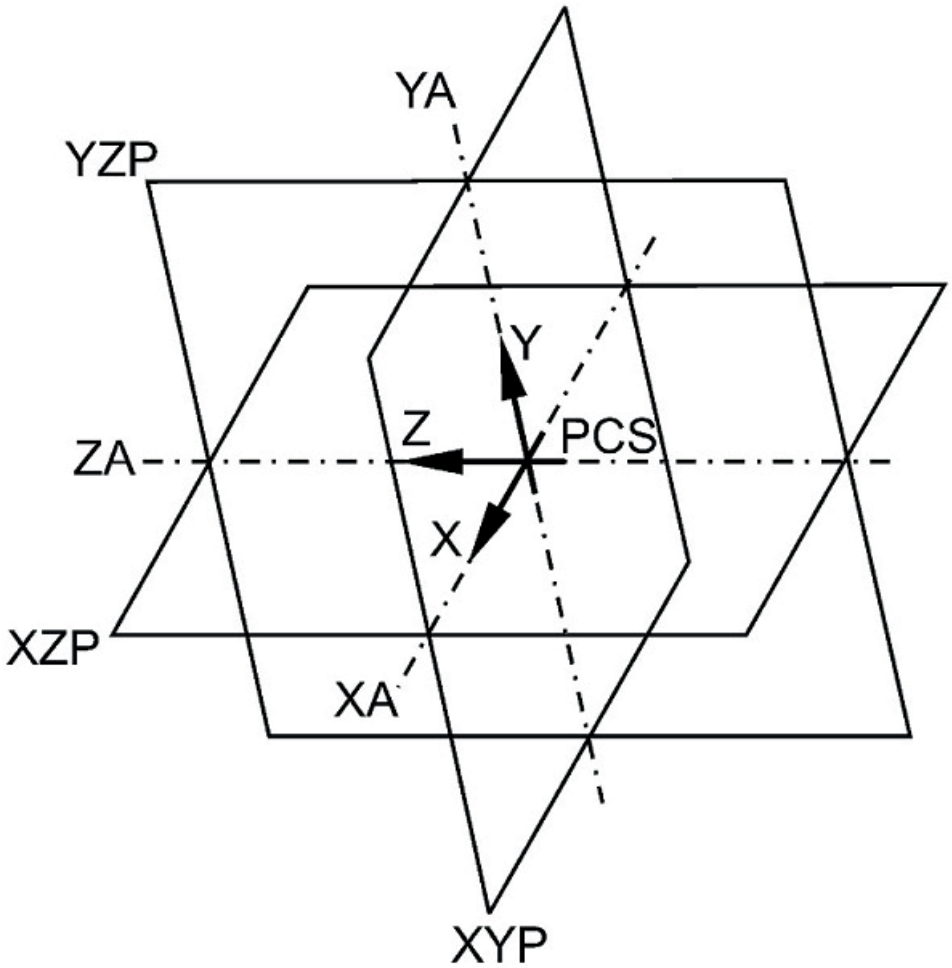

Figure 1 — Primary coordinate system

4.3 Mounting coordinate system

For the virtual mounting of components of modular systems either on an adaptive item or on another component, an additional reference system shall be defined. This reference system shall be called "mounting coordinate system" (MCS). It is located at the starting point of the protruding length of a tool item. The orientation is shown in Figure 2.

© ISO 2017 – All rights reserved

Documents
Document Sharing Hub
Full document details: PD ISO/TS 13399-305:2017

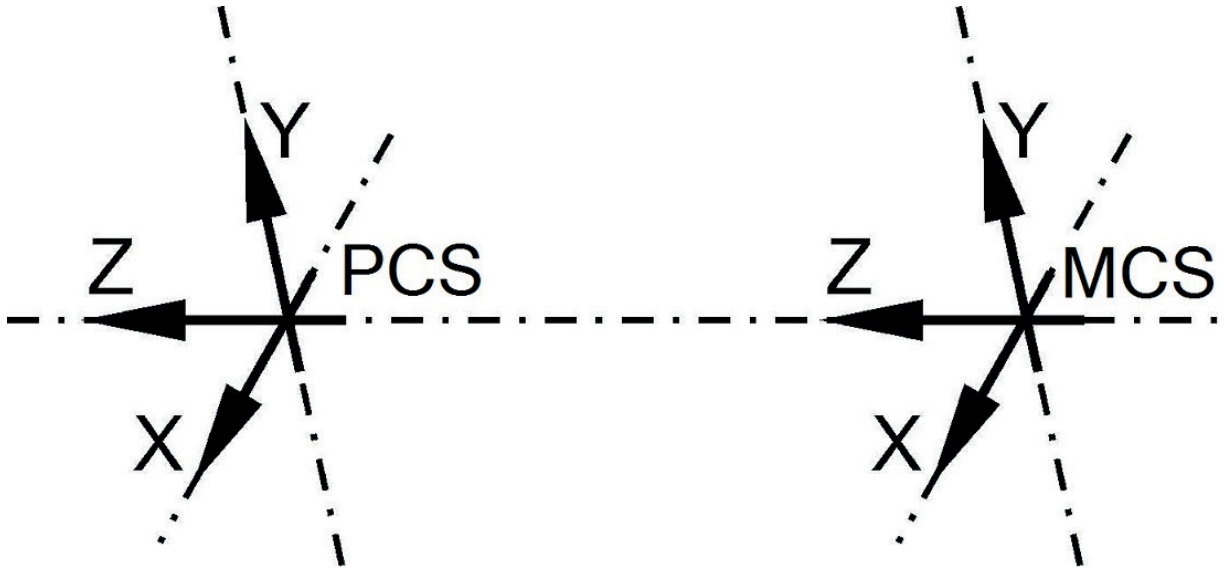

Figure 2 — Orientation of MCS

4.4 Coordinate system at the cutting part

The coordinate system at the cutting part is shown in Figure 3, e.g. the front face, named "coordinate system in process" (CIP), with a defined distance to the PCS shall be oriented as follows:

— the origin is on a plane that is parallel to the XY-pane of PCS and is located on the most front-cutting point;

— Z-axis of CIP points to the PCS;

— Z-axis of CIP is collinear to the Z-axis of PCS;

— Y-axis of CIP is parallel to the Y-axis of PCS.

© ISO 2017 – All rights reserved
Documents
Document Sharing Hub
Full document details: PD ISO/TS 13399-305:2017

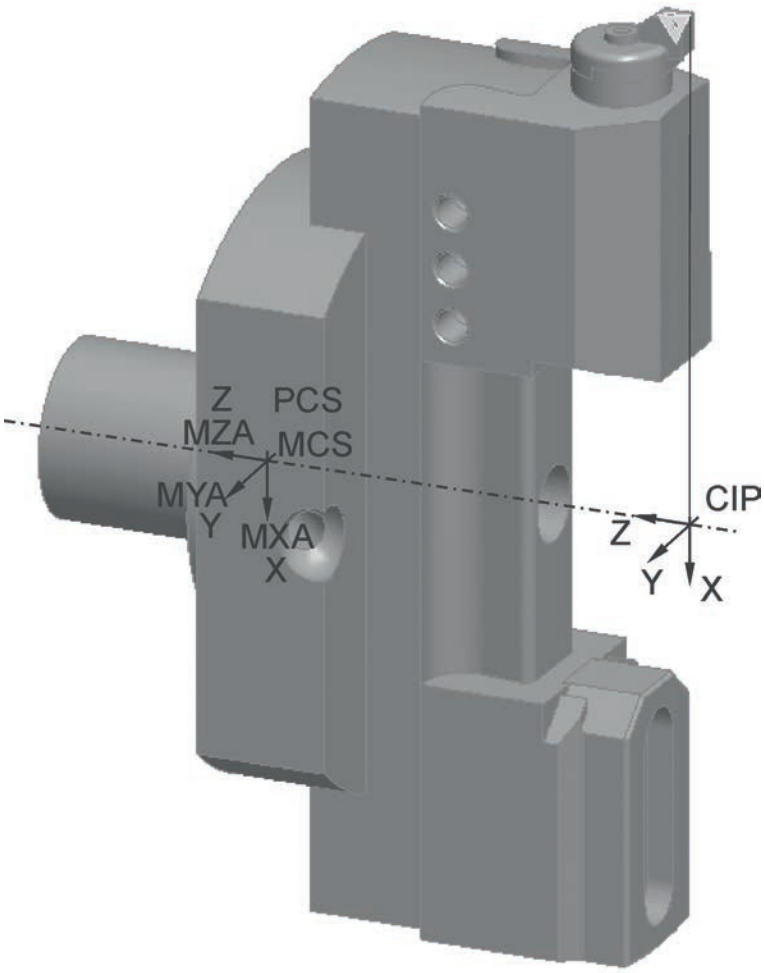

Figure 3 — Orientation of CIP

If the 3D modelling software gives the possibility to include interfaces for components, e.g. mount a face cutting part onto a complete cutting tool, the coordinate system "CIP" should be used.

If necessary, another designation shall be given to the interface of the component (dependent on the software). The name is "CSIF" (for "coordinate system interface") and includes the coordinate system "CIP".

4.5 Planes

The modelling shall take place based on planes according to Figure 4, used as reference if applicable. Therefore, the model shall be able to vary or single features of independent design features shall be deleted by means of changing the value of one or more parameter of the model design. Furthermore, the identification of the different areas shall be simplified by using the plane concept, even if they contact each other with the same size, e.g. chip flute, shank, etc.

For the 3D visualization of modular tooling systems, the planes shall be determined as follows.

© ISO 2017 – All rights reserved

Documents
Document Sharing Hub
Full document details: PD ISO/TS 13399-305:2017

— "TEP" "tool end plane" is located at that end of the connection that points away from the workpiece, if the tool does not have a contact surface and/or a gauge line the TEP is coplanar with the XY-plane of the PCS. The overall length (OAL) is the distance between the extremes of the object and starts at the "TEP".

— "HEP" "head end plane" is either coplanar with the XY plane of the "CIP", if CIP does exist, or is located at the distance of "overall length".

— "LSP" "shank length plane" is located at the end of the dimension "shank length", if the connection is cylindrical. If "shank length" does not exist, the plane shall be named as "protruding length plane, LPRP".

Figure 4 shows an example of the order and location of defined planes for design.

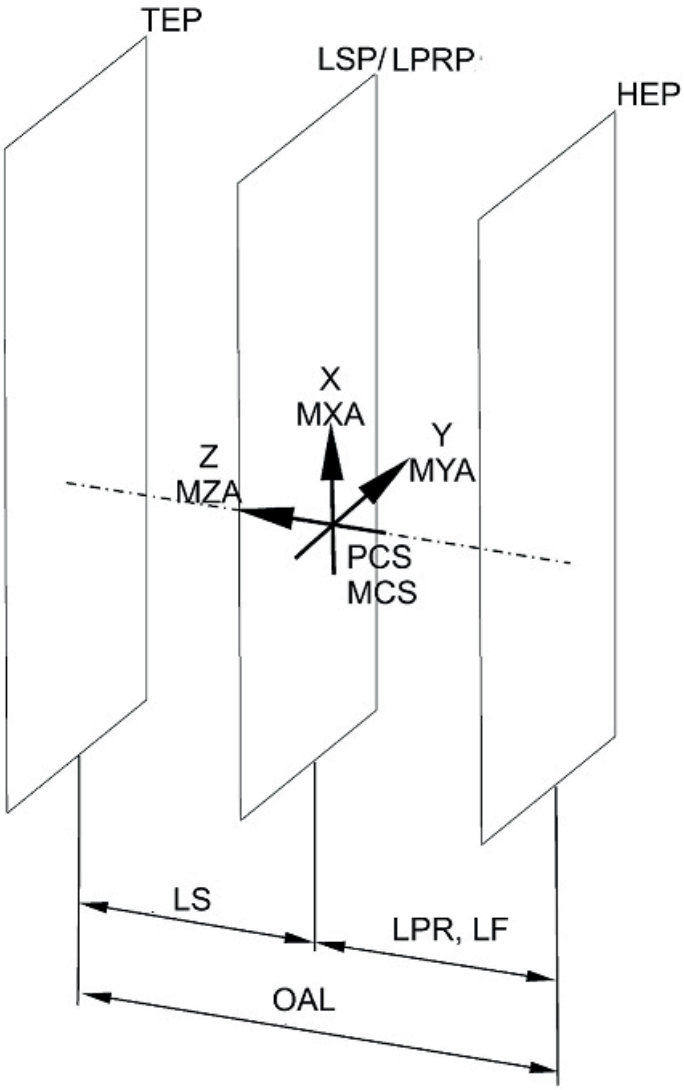

Figure 4 — Planes for design

4.6 Adjustment coordinate system on workpiece side

4.6.1 General

Additional coordinate systems for mounting components "CSWx_y" (coordinate system workpiece side) shall be defined according to ISO/TS 13399-50.

© ISO 2017 – All rights reserved
Documents
Document Sharing Hub
Full document details: PD ISO/TS 13399-305:2017

4.6.2 Designation of the coordinate system workpiece side

Case 1 One coordinate system at the workpiece side shall be designated as “CSW”.

Case 2 One coordinate system at workpiece side on different levels shall be designated as “CSWx”, e.g. “CSW1”, “CSW2”. The numbering shall start at the workpiece side and end at the machine side in the direction of the positive Z-axis.

Case 3 Multiple coordinate systems at one level, but different angles and not at the centre of the tool axis, shall be designated with “CSWx_y”, where the “x” defines the level and the “y” defines the number of the coordinate system itself. The counting shall start at the three o’clock position counting in counter-clockwise direction while looking towards the machine spindle (positive Z-axis).

Case 4 Multiple coordinate systems at one level, one angle and different diameters shall be designated as described in case 3. The counting shall start at the smallest diameter.

Case 5 Multiple coordinate systems at one level, different angles and different diameters shall be designated as described in case 3. The counting shall start at the smallest diameter and at the three o’clock position counting in counter-clockwise direction while looking towards the machine spindle (positive Z-axis).

Figure 5 illustrates an example of the arrangement of the CSWs.

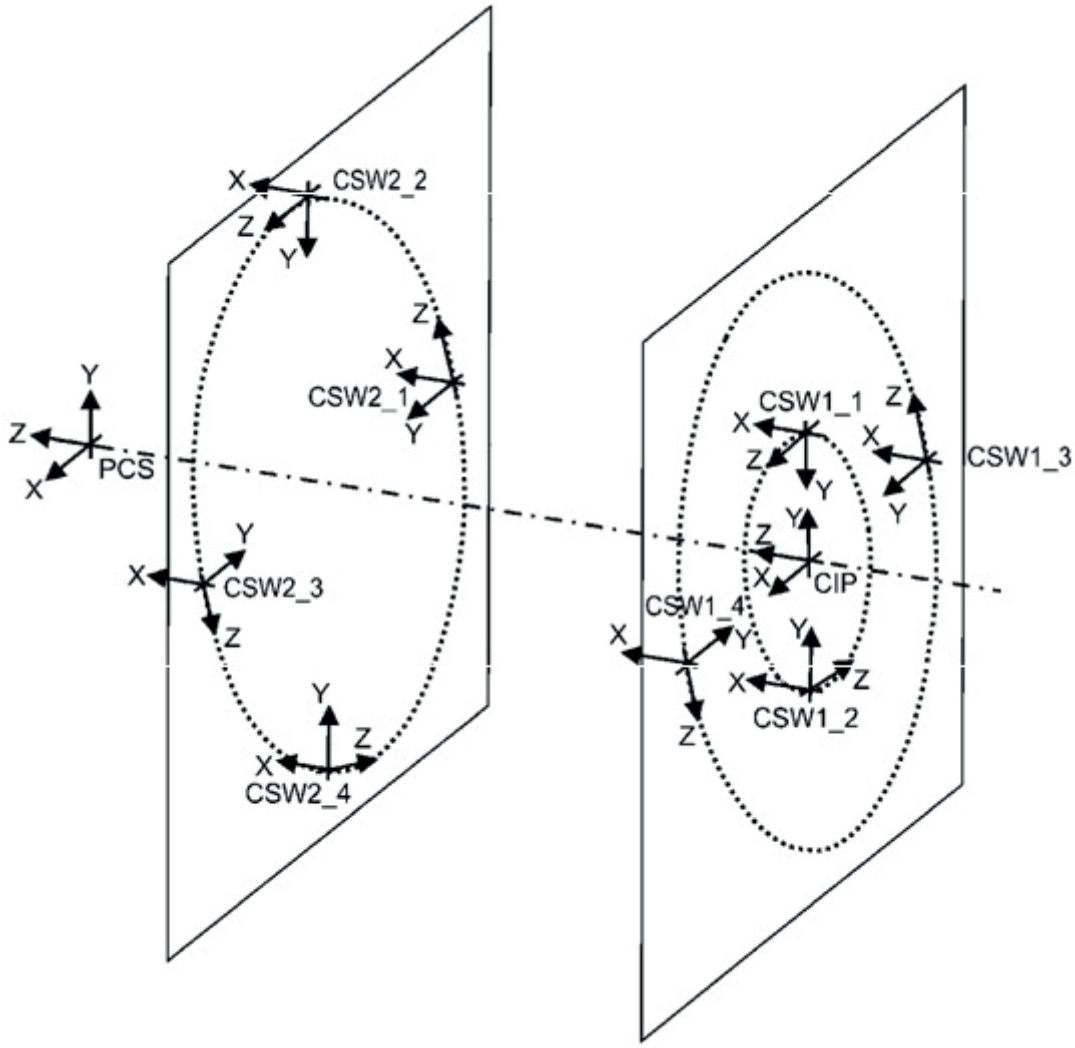

Figure 5 — Example of adjustment coordinate system on workpiece side

© ISO 2017 – All rights reserved

Documents
Document Sharing Hub
Full document details: PD ISO/TS 13399-305:2017

4.6.3 Arrangement of coordinate system workpiece side

The CSWx_y can be arranged in relation to the PCS by means of using the six degrees of freedom.

a) Rotation about:

   1) the X-axis by the angle rho (“RHO”);

   2) the Y-axis by the angle kappa (“KAP”);

   3) the Z-axis by the angle phi (“PHI”).

b) Distance from the PCS origin perpendicular to:

   1) XYW-plane by XYWD;

   2) XZW-plane by XZWD;

   3) YZW-plane by YZWD.

The orientation and location of CSW are shown in Figure 6.

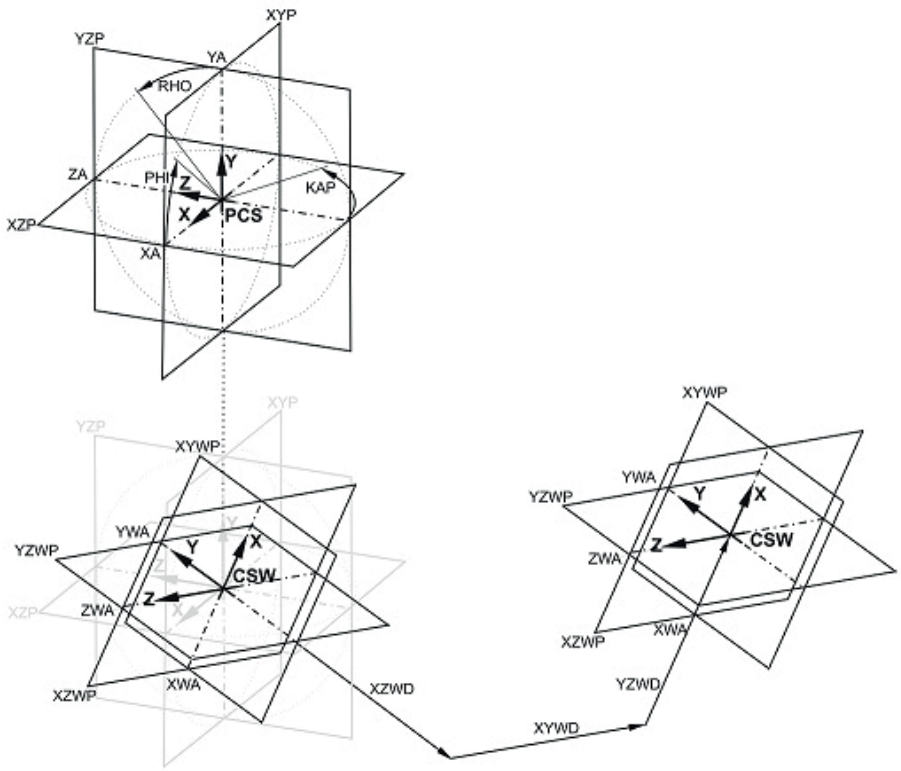

Figure 6 — Orientation of coordinate system at workpiece side

Figure 7 shows an example of the location of the different coordinate systems.

© ISO 2017 – All rights reserved
Documents
Document Sharing Hub
Full document details: PD ISO/TS 13399-305:2017

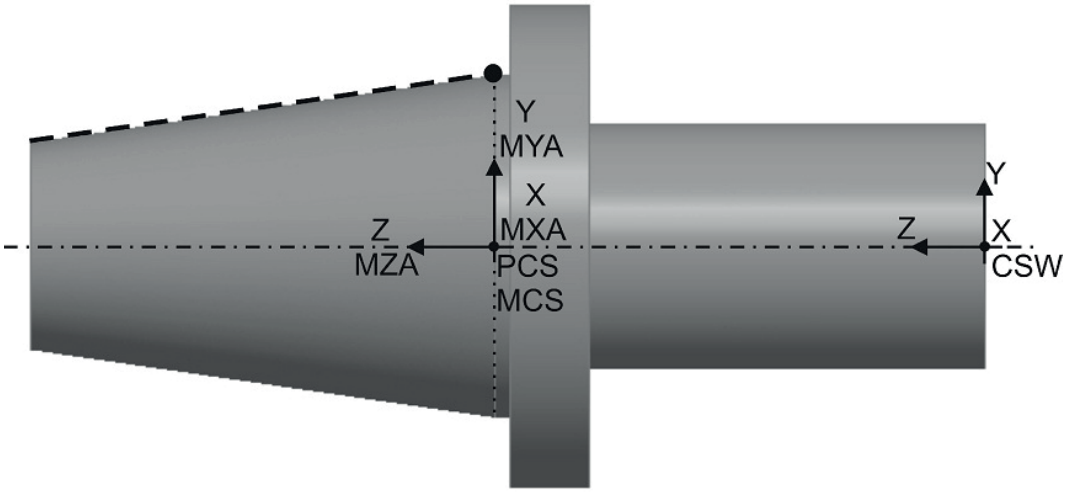

Figure 7 — Example of the position of PCS, MCS and CSW

4.7 Design of the pocket seat and cutting reference point (CRP) of the insert

The final position of the pocket seat shall be designed by means of designing an insert. This feature shall be used for subtraction from the tool body. To give the possibility to use inserts with different corner radii, only that corner defining the functional dimensions shall carry the corner radius. The remaining corners shall be designed without corner radius.

MCS-coordinate system of the insert (MCS_INSERT) and the PCS-coordinate system of the insert (PCS_INSERT) are oriented differently to the primary coordinate system of the tool (PCS_TOOL). The orientation is shown in Figure 8.

The neutral position of an insert shall be determined as follows:

— the origin of the MCS_INSERT positioned onto the centre of the inscribed circle; at rectangular and parallelogram-shaped inserts, the point of origin is determined through the intersection of the two diagonal lines;

— the X-axis of MCS_INSERT parallel to the X-axis of PCS_INSERT;

— the Y-axis of MCS_INSERT parallel to the Y-axis of PCS_INSERT;

— the Z-axis of MCS_INSERT parallel to the Z-axis of PCS_INSERT;

— the X-axis of PCS_INSERT collinear to the X-axis of PCS_TOOL;

— the Y-axis of PCS_INSERT collinear to the Z-axis of PCS_TOOL;

— the Z-axis of PCS_INSERT collinear to the Y-axis of PCS_TOOL.

Positioning of the insert into the functional location shall be done as follows.

a) Design with end cutting edge angle on a right-handed tool.

   — Only those inserts that are located in the second quadrant of the primary coordinate system of the insert shall be used. Also called “left-handed” inserts.

   — The insert shall be rotated by 90-KAPR degrees in mathematic positive direction (counter-clockwise) about the Y-axis of PCS_TOOL.

© ISO 2017 – All rights reserved

Documents
Document Sharing Hub
Full document details: PD ISO/TS 13399-305:2017

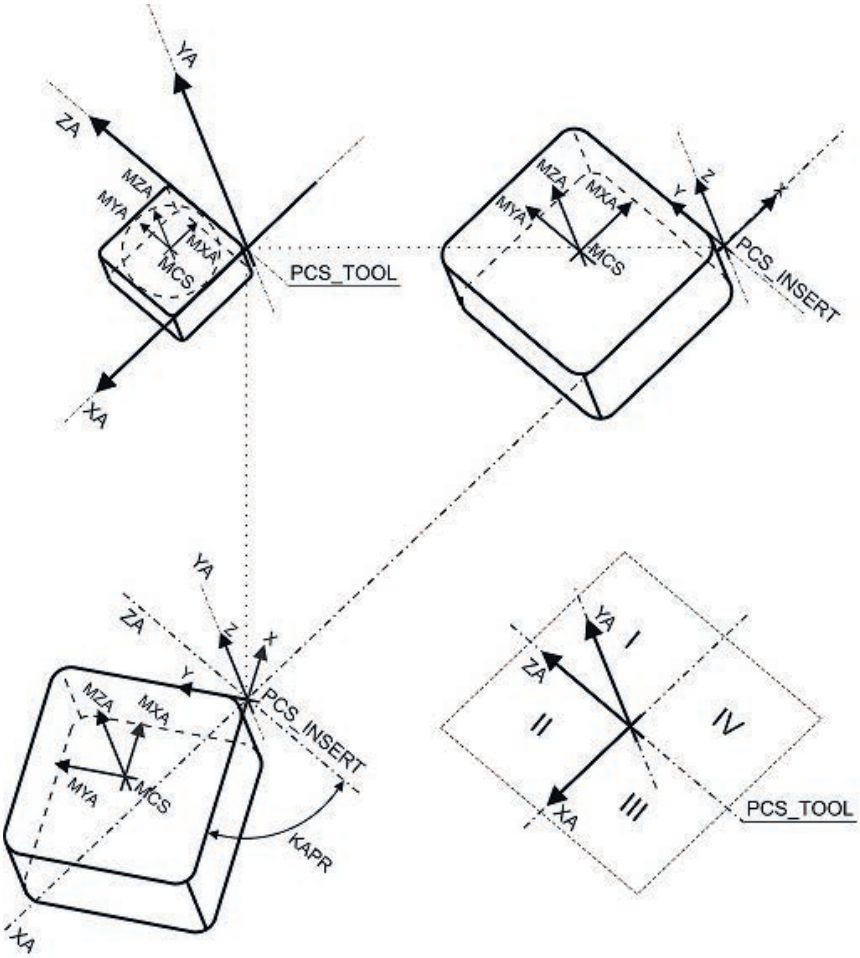

Figure 8 — Orientation of PCS_INSERT, MCS_INSERT and PCS_TOOL on end cutting edge angle

b) The cutting reference point "CRP" is the point where the functional dimensions are based. The definition of the CRP is given in ISO/TS 13399-50. The coordinate system of CRP (CS_CRP) shall be defined as follows:

— the X-axis of CS_CRP collinear to the X-axis of PCS_INSERT;

— the Y-axis of CS_CRP parallel to the Y-axis of PCS_INSERT;

— the Z-axis of CS_CRP parallel to the Z-axis of PCS_INSERT.

c) If the tool is defined with an orthogonal rake angle and an inclination angle that are unequal to 0° as shown in Figure 9, the insert shall be rotated about its CRP.

— To define the orthogonal rake angle (GAMO) on the tool, the pocket seat shall be rotated about the X-axis of C_CRP. If GAMO is smaller than 0° (zero degree), the rotation shall be done in mathematic positive direction. If GAMO is greater than 0° (zero degree), the rotation shall be done in mathematic negative direction.

— To define the inclination angle (LAMS) on the tool, the pocket seat shall be rotated about the Y-axis of C_CRP. If LAMS is smaller than 0° (zero degree), the rotation shall be done in mathematic positive direction. If LAMS is greater than 0° (zero degree), the rotation shall be done in mathematic negative direction.

© ISO 2017 – All rights reserved
Documents
Document Sharing Hub
Full document details: PD ISO/TS 13399-305:2017

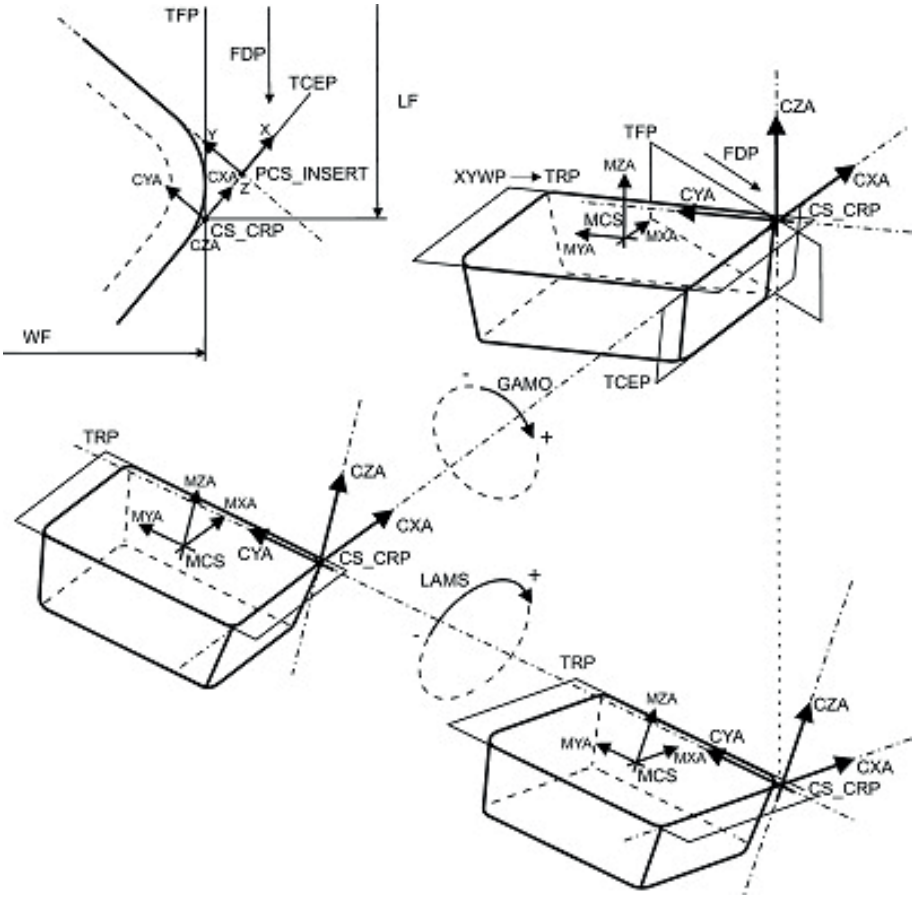

Figure 9 — Orthogonal angle and inclination angle on insert

d) Design with side cutting edge angle on a right-handed tool.

— Only those inserts located in the first quadrant of the primary coordinate system of the insert, also called “right-handed” or “neutral” inserts, shall be used.

— The insert shall be rotated by KAPR degrees in mathematic positive direction (counter-clockwise) about the Y-axis of PCS_TOOL.

— The cutting reference point “CRP” shall be the point where the functional dimensions are based.

— Definition of the coordinate system of CRP (see above).

— Orientation of GAMO and LAMS (see Figure 10).

© ISO 2017 – All rights reserved

Documents
Document Sharing Hub
Full document details: PD ISO/TS 13399-305:2017

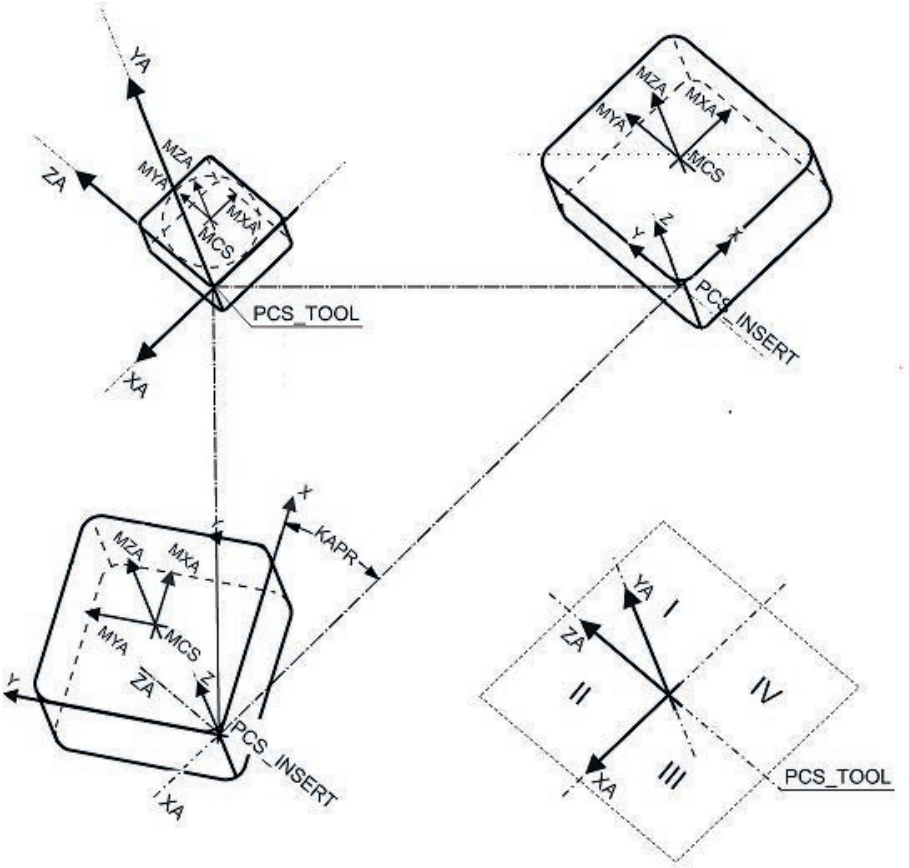

Figure 10 — Orientation of PCS_INSERT, MCS_INSERT and PCS_TOOL on side cutting edge angle

The MCS_INSERT shall be placed on the CSWx_y of the tool with determinations as follows.

— The X-axis of MCS_INSERT is collinear to the X-axis of CSWx_y.

— The Y-axis of MCS_INSERT is collinear to the Y-axis of CSWx_y.

— The Z-axis of MCS_INSERT is collinear to the Z-axis of CSWx_y.

Figure 11 illustrates an example of mounting insert on pocket seat.

© ISO 2017 – All rights reserved
Documents
Document Sharing Hub
Full document details: PD ISO/TS 13399-305:2017

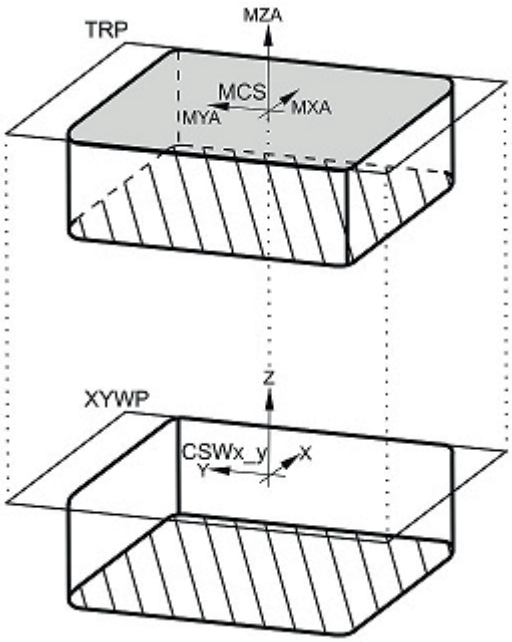

Figure 11 — Mounting of insert on pocket seat

5 Design of the model

5.1 General

The sketches and features of the crude model may not contain details like slots, chamfers, rounding and grooves. Those features shall be designed as separate design elements after the crude geometry and shall be grouped as detail geometry. Based on the non-cutting features (group "NOCUT"), the cutting features shall be loaded as assembly parts (group "CUT") into the basic model.

Inserts shall be incorporated into the assembly as independent components. The reference to the adjustment coordinate systems shall be used for the mounting.

The examples of the basic shapes of adaptive items of the modular systems shall be designed with cylindrical shank and positioned on to the PCS.

All examples shall be designed with 0° orthogonal rake angle and 0° inclination angle.

The total amount of design elements shall be dependent on the level of detail and on the complexity of the cutting tool.

The specific model structure of the different shapes and components of modular tooling systems with adjustable cartridges for boring shall be described in the next clauses of this document.

5.2 Necessary parameters for the connection interface feature

Information about the connection interface code shall be filed as properties within the model and named as parameters as listed in Table 1.

© ISO 2017 – All rights reserved

Documents
Document Sharing Hub
Full document details: PD ISO/TS 13399-305:2017

Table 1 — Parameter list for connection interface feature

Preferred symbol	Description	Source of symbol	ISO-ID number
CCMS	Connection code machine side	ISO/TS 13399-3 and ISO/TS 13399-4	71D102AE3B252
CCTMS	Connection code type machine side	ISO/TS 13399-60 short name of subtype of connection_interface_feature	feature_class
CCFMS	Connection code form machine side	ISO/TS 13399-60 number of the variant of the subtype of connection_interface_feature	feature_class
CZCMS	Connection size code machine side	connection size code (dependent of side)	71FC193318002
CCWS	Connection code workpiece side	ISO/TS 13399-3 and ISO/TS 13399-4	71D102AE8A5A9
CCTWS	Connection code type workpiece side	ISO/TS 13399-60 short name of subtype of connection_interface_feature	feature_class
CCFWS	Connection code form workpiece side	ISO/TS 13399-60 number of the variant of the subtype of connection_interface_feature	feature_class
CZCWS	Connection size code workpiece side	connection size code (dependent of side)	71FC193318002

The information in Table 1 and other relevant properties shall be incorporated into the model as parameters or shall be taken as a separate file.

5.3 Necessary properties for insert and pocket seat

5.3.1 General

Necessary properties for the design of the pocket seat features shall be taken in accordance with the defined properties for cutting items (see ISO/TS 13399-2). To be able to differentiate between tool-item and cutting-item properties, a postfix shall be added to the preferred symbols of the cutting-item properties. The postfix shall have the same code and sequence as the different coordinate axis systems on workpiece side that are defined in 4.6.

5.3.2 Properties for equilateral, equiangular and equilateral, non-equiangular inserts

Equilateral and equiangular inserts are as follows:

— H: hexagonal insert;

— O: octogonal insert;

— P: pentagonal insert;

— S: square insert;

— T: triangular insert.

Equilateral and non-equiangular inserts are as follows:

a) C, D, E, M, V: rhombic insert;

b) W: trigon insert.

© ISO 2017 – All rights reserved
Documents
Document Sharing Hub
Full document details: PD ISO/TS 13399-305:2017

Table 2 lists the properties needed for equilateral, equiangular and equilateral non-equiangular seats.

Table 2 — Properties for modelling equilateral, equiangular and equilateral, non-equiangular pocket seats

Preferred name	Preferred symbol
Clearance angle major	AN
Insert included angle	EPSR
Insert included angle minor	EPSRN
Inscribed circle diameter	IC
Cutting edge length[a]	L[a]
Corner radius	RE
Corner radius minor	REN
Insert thickness	S
[a] To be calculated. It is dependent on IC and EPSR.	

5.3.3 Properties for non-equilateral, equiangular and non-equilateral, non-equiangular inserts

Inserts are designated as follows:

— non-equilateral and equiangular inserts designated as: L — rectangular insert;

— non-equilateral and non-equiangular inserts designated as: A, B, K — parallelogram-shaped insert.

Table 3 lists the properties needed for non-equilateral, equiangular and non-equilateral non-equiangular seats.

Table 3 — Properties for modelling non-equilateral, equiangular and non-equilateral, non-equiangular pocket seats

Preferred name	Preferred symbol
Clearance angle major	AN
Clearance angle minor	ANN
Insert included angle	EPSR
Insert length	INSL
Corner radius	RE
Corner radius minor	REN
Insert thickness	S
Insert width	W1
Cutting edge length[a]	L[a]
[a] To be calculated. It is dependent on INSL and EPSR.	

5.3.4 Properties for round inserts

Round inserts are designated as: R — round insert.

Table 4 lists the properties needed for round seats.

© ISO 2017 – All rights reserved

Documents
Document Sharing Hub
Full document details: PD ISO/TS 13399-305:2017

Table 4 — Properties for modelling round pocket seats

Preferred name	Preferred symbol
Clearance angle major	AN
Inscribed circle diameter	IC
Insert thickness	S

5.3.5 Design of the pocket seat feature

The design shall be done according to ISO/TS 13399-201 for regular inserts or according to ISO/TS 13399-202 for irregular inserts, but without any corner configuration on the opposite side where the functional dimensions are based.

6 Basic shapes for extension bridges, adjustment and assembly parts

6.1 Monoblock extension bridges with adaptor

6.1.1 General

Figure 12 shows the properties used for identification and classification of monoblock extension bridges with adaptor. The example shows a bridge with cylindrical shank.

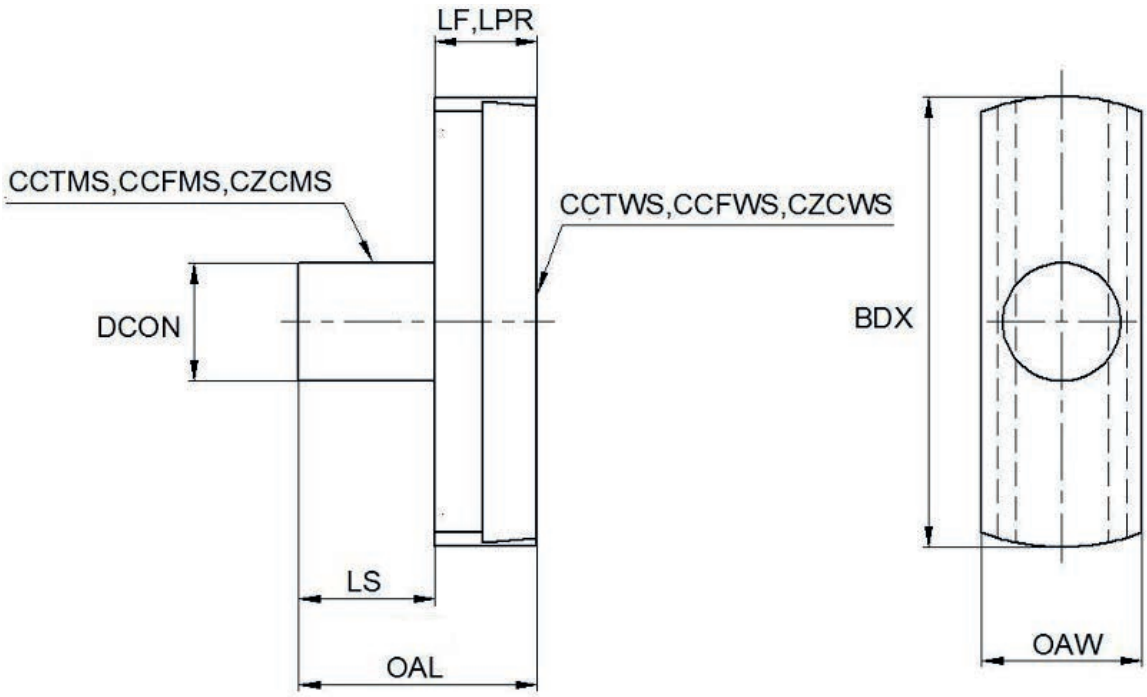

Figure 12 — Determination of properties for monoblock extension bridges with adaptor

6.1.2 Necessary properties

A bloc is as follows.

Table 5 lists the properties needed for a monoblock extension bridge with adaptor.

© ISO 2017 – All rights reserved
Documents
Document Sharing Hub
Full document details: PD ISO/TS 13399-305:2017