PD ISO/TS 13399-307:2016

BSI Standards Publication

Cutting tool data representation and exchange

Part 307: Creation and exchange of 3D models — End mills for indexable inserts

bsi.

...making excellence a habit.™

Document Sharing Hub

National foreword

This Published Document is the UK implementation of ISO/TS 13399-307:2016.

The UK participation in its preparation was entrusted to Technical Committee MTE/18, Tools tips and inserts for cutting applications.

A list of organizations represented on this committee can be obtained on request to its secretary.

This publication does not purport to include all the necessary provisions of a contract. Users are responsible for its correct application.

© The British Standards Institution 2016. Published by BSI Standards Limited 2016

ISBN 978 0 580 89399 5

ICS 25.100.01; 35.240.50

Compliance with a British Standard cannot confer immunity from legal obligations.

This Published Document was published under the authority of the Standards Policy and Strategy Committee on 29 February 2016.

Amendments issued since publication

Date	Text affected

Documents
Document Sharing Hub

Full document details: PD ISO/TS 13399-307:2016

TECHNICAL SPECIFICATION

ISO/TS 13399-307

First edition
2016-02-15

Cutting tool data representation and exchange —

Part 307: Creation and exchange of 3D models — End mills for indexable inserts

Représentation et échange des données relatives aux outils coupants —

Partie 307: Création et échange des modèles 3D — Fraises à plaquettes amovibles

Reference number
ISO/TS 13399-307:2016(E)

Documents
Document Sharing Hub
© ISO 2016

COPYRIGHT PROTECTED DOCUMENT

© ISO 2016, Published in Switzerland

All rights reserved. Unless otherwise specified, no part of this publication may be reproduced or utilized otherwise in any form or by any means, electronic or mechanical, including photocopying, or posting on the internet or an intranet, without prior written permission. Permission can be requested from either ISO at the address below or ISO's member body in the country of the requester.

ISO copyright office
Ch. de Blandonnet 8 • CP 401
CH-1214 Vernier, Geneva, Switzerland
Tel. +41 22 749 01 11
Fax +41 22 749 09 47
copyright@iso.org
www.iso.org

© ISO 2016 – All rights reserved

Documents
Document Sharing Hub

Full document details: PD ISO/TS 13399-307:2016

Contents

Page

Foreword ... **vi**

Introduction ... **viii**

1 Scope ... **1**

2 Normative references ... **1**

3 Starting elements, coordinate systems, planes ... **2**
3.1 General ... 2
3.2 Reference system ... 2
3.3 Coordinate system at the cutting part ... 3
3.4 Planes ... 4
3.5 Design of the pocket seat and cutting reference point (CRP) of the insert ... 5
3.6 Adjustment coordinate system on workpiece side ... 8
3.6.1 General ... 8
3.6.2 Designation of the coordinate system workpiece side ... 8

4 Design of the model ... **9**
4.1 General ... 9
4.2 Necessary parameters for the connection interface feature ... 9
4.3 Necessary properties for inserts ... 10
4.3.1 General ... 10
4.3.2 Properties for equilateral, equiangular and equilateral, non-equiangular inserts ... 10
4.3.3 Properties for non-equilateral, equiangular and non-equilateral, non-equiangular inserts ... 11
4.3.4 Design of the pocket seat feature ... 11

5 End mill, non-centre cutting, single row ... **11**
5.1 General ... 11
5.2 Necessary properties ... 12
5.3 Basic geometry ... 13
5.4 Determination of the position of the mounting coordinate system of insert ... 13
5.5 Chip flute and pocket seat ... 14
5.6 Assembly of a single row, non-centre cutting end mill ... 15

6 Single row, non-centre cutting V-groove end mill ... **16**
6.1 General ... 16
6.2 Necessary properties ... 17
6.3 Basic geometry ... 17
6.4 Determination of the position of the mounting coordinate system of insert ... 17
6.5 Chip flute and pocket seat ... 18
6.6 Single row, non-centre cutting V-groove end mill assembly ... 19

7 Single row, non-centre-cutting dovetail end mill ... **20**
7.1 General ... 20
7.2 Necessary properties ... 20
7.3 Basic geometry ... 21
7.4 Determination of the position of the mounting coordinate system of insert ... 21
7.5 Chip flute and pocket seat ... 21
7.6 Single row, non-centre-cutting dovetail end mill assembly ... 22

8 T-slot end mill ... **22**
8.1 General ... 22
8.2 Necessary properties ... 23
8.3 Basic geometry ... 23
8.4 Determination of the position of the mounting coordinate system of insert ... 23
8.5 Chip flute and pocket seat ... 24
8.6 Assembly of a T-slot end mill ... 25

AVA Documents
Document Sharing Hub

© ISO 2016 – All rights reserved

Full document details: PD ISO/TS 13399-307:2016

9 Single row, rounded end mill ... 26
9.1 General ... 26
9.2 Necessary properties ... 27
9.3 Basic geometry ... 27
9.4 Determination of the position of the mounting coordinate system of insert ... 28
9.5 Chip flute and pocket seat ... 28
9.6 Assembly of a rounded end mill ... 30

10 Threading end mill ... 30
10.1 General ... 30
10.2 Necessary properties ... 31
10.3 Basic geometry ... 32
10.4 Determination of the position of the mounting coordinate system of insert ... 32
10.5 Chip flute and pocket seat ... 33
10.6 Assembled threading end mill ... 34

11 End mill, non-centre-cutting, multiple rows ... 35
11.1 General ... 35
11.2 Necessary properties ... 35
11.3 Basic geometry ... 36
11.4 Determination of the position of the mounting coordinate system of insert ... 36
11.5 Chip flute and pocket seat ... 38
11.6 Multiple rows, non-centre-cutting end mill assembly ... 39

12 Angular end mill, non-centre-cutting, multiple rows ... 40
12.1 General ... 40
12.2 Necessary properties ... 40
12.3 Basic geometry ... 41
12.4 Determination of the position of the mounting coordinate system of insert ... 41
12.5 Chip flute and pocket seat ... 41
12.6 Multiple rows non-centre-cutting angular end mill assembly ... 42

13 End mill, centre-cutting, multiple rows ... 42
13.1 General ... 42
13.2 Necessary properties ... 43
13.3 Basic geometry ... 43
13.4 Determination of the position of the mounting coordinate system of insert ... 43
13.5 Chip flute and pocket seat ... 44
13.6 Multiple rows, centre-cutting angular end mill assembly ... 45

14 Spot-facing end mill ... 46
14.1 General ... 46
14.2 Necessary properties ... 46
14.3 Basic geometry ... 47
14.4 Determination of the position of the mounting coordinate system of insert ... 47
14.5 Chip flute and pocket seat ... 47
14.6 Assembled spot-facing end mill ... 49

15 Straight ball-nosed end mill ... 49
15.1 General ... 49
15.2 Necessary properties ... 50
15.3 Basic geometry ... 50
15.4 Determination of the position of the mounting coordinate system of insert ... 51
15.5 Chip flute and pocket seat ... 52
15.6 Straight ball-nosed end mill assembly ... 53

16 Angular ball-nosed end mill ... 53
16.1 General ... 53
16.2 Necessary properties ... 54
16.3 Basic geometry ... 54
16.4 Determination of the position of the mounting coordinate system of insert ... 54
16.5 Chip flute and pocket seat ... 54

© ISO 2016 – All rights reserved
Documents
Document Sharing Hub
Full document details: PD ISO/TS 13399-307:2016

16.6 Angular ball-nosed end mill assembly ... 54

17 Die and mould end mill ... 54
17.1 General ... 54
17.2 Necessary properties ... 55
17.3 Basic geometry ... 56
17.4 Determination of the position of the mounting coordinate system of insert ... 56
17.5 Chip flute and pocket seat ... 56
17.6 Die end mill assembly ... 58

18 Bell-style end mill ... 58
18.1 General ... 58
18.2 Necessary properties ... 59
18.3 Basic geometry ... 60
18.4 Determination of the position of the mounting coordinate system of insert ... 60
18.5 Chip flute and pocket seat ... 61
18.6 Bell-style end mill assembly ... 61

19 Design of details ... 61
19.1 Basis for modelling ... 61
19.2 Fixing threads for inserts ... 62
19.3 Contact/clamping surfaces — Orientation ... 62
19.4 Chamfers and roundings ... 62

20 Attributes of surfaces — Visualization of the model features ... 62

21 Structure of the design elements (tree of model) ... 62

22 Data exchange model ... 63

Annex A (informative) **Information about nominal dimensions ... 65**

Bibliography ... 66

© ISO 2016 – All rights reserved

Documents
Document Sharing Hub
Full document details: PD ISO/TS 13399-307:2016

Foreword

ISO (the International Organization for Standardization) is a worldwide federation of national standards bodies (ISO member bodies). The work of preparing International Standards is normally carried out through ISO technical committees. Each member body interested in a subject for which a technical committee has been established has the right to be represented on that committee. International organizations, governmental and non-governmental, in liaison with ISO, also take part in the work. ISO collaborates closely with the International Electrotechnical Commission (IEC) on all matters of electrotechnical standardization.

The procedures used to develop this document and those intended for its further maintenance are described in the ISO/IEC Directives, Part 1. In particular the different approval criteria needed for the different types of ISO documents should be noted. This document was drafted in accordance with the editorial rules of the ISO/IEC Directives, Part 2 (see www.iso.org/directives).

Attention is drawn to the possibility that some of the elements of this document may be the subject of patent rights. ISO shall not be held responsible for identifying any or all such patent rights. Details of any patent rights identified during the development of the document will be in the Introduction and/or on the ISO list of patent declarations received (see www.iso.org/patents).

Any trade name used in this document is information given for the convenience of users and does not constitute an endorsement.

For an explanation on the meaning of ISO specific terms and expressions related to conformity assessment, as well as information about ISO's adherence to the WTO principles in the Technical Barriers to Trade (TBT), see the following URL: Foreword — Supplementary information.

The committee responsible for this document is ISO/TC 29, *Small tools*.

ISO/TS 13399 consists of the following parts, under the general title *Cutting tool data representation and exchange*:

— *Part 1: Overview, fundamental principles and general information model*

— *Part 2: Reference dictionary for the cutting items* [Technical Specification]

— *Part 3: Reference dictionary for tool items* [Technical Specification]

— *Part 4: Reference dictionary for adaptive items* [Technical Specification]

— *Part 5: Reference dictionary for assembly items* [Technical Specification]

— *Part 50: Reference dictionary for reference systems and common concepts* [Technical Specification]

— *Part 60: Reference dictionary for connection systems* [Technical Specification]

— *Part 80: Creation and exchange of 3D models — Overview and principles* [Technical Specification]

— *Part 100: Definitions, principles and methods for reference dictionaries* [Technical Specification]

— *Part 150: Usage guidelines* [Technical Specification]

— *Part 201: Creation and exchange of 3D models — Regular inserts* [Technical Specification]

— *Part 202: Creation and exchange of 3D models — Irregular inserts* [Technical Specification]

— *Part 203: Creation and exchange of 3D models — Replaceable inserts for drilling* [Technical Specification]

— *Part 204: Creation and exchange of 3D models — Inserts for reaming* [Technical Specification]

— *Part 301: Concept for the design of 3D models based on properties according to ISO/TS 13399-3: Modelling of thread-cutting taps, thread-forming taps and thread-cutting dies* [Technical Specification]

AVA Documents
Document Sharing Hub

© ISO 2016 – All rights reserved

Full document details: PD ISO/TS 13399-307:2016

— *Part 302: Concept for the design of 3D models based on properties according to ISO/TS 13399-3: Modelling of solid drills and countersinking tools* [Technical Specification]

— *Part 303: Concept for the design of 3D models based on properties according to ISO/TS 13399-3: Modelling of end mills with solid cutting edges* [Technical Specification]

— *Part 304: Concept for the design of 3D models based on properties according to ISO/TS 13399-3: Modelling of milling cutters with arbor hole and solid cutting edges* [Technical Specification]

— *Part 307: Creation and exchange of 3D models — End mills for indexable inserts* [Technical Specification]

— *Part 308: Creation and exchange of 3D models — Milling cutters with arbor hole for indexable inserts* [Technical Specification]

— *Part 309: Creation and exchange of 3D models — Tool holders for indexable inserts* [Technical Specification]

— *Part 311: Creation and exchange of 3D models — Solid reamers* [Technical Specification]

— *Part 312: Creation and exchange of 3D models — Reamers for indexable inserts* [Technical Specification]

— *Part 401: Creation and exchange of 3D models — Converting, extending and reducing adaptive items* [Technical Specification]

— *Part 405: Creation and exchange of 3D models — Collets* [Technical Specification]

The following parts are under preparation:

— *Part 70: Graphical data layout — Layer settings for tool designs* [Technical Specification]

— *Part 71: Graphical data layout — Creation of documents for the standardized data exchange — Graphical product information* [Technical Specification]

— *Part 72: Creation of documents for the standardized data exchange — Definition of properties for drawing header and their XML-data exchange* [Technical Specification]

— *Part 305: Creation and exchange of 3D models — Modular tooling systems with adjustable cartridges for boring* [Technical Specification]

— *Part 310: Creation and exchange of 3D models — Turning tools with carbide tips* [Technical Specification]

© ISO 2016 – All rights reserved

Documents
Document Sharing Hub
Full document details: PD ISO/TS 13399-307:2016

Introduction

This part of ISO/TS 13399 defines the concept, the terms and the definitions on how to design simplified 3D models of end mills for indexable inserts that can be used for NC-programming, simulation of the manufacturing processes and the determination of collision within machining processes. It is not intended to standardize the design of the cutting tool itself.

A cutting tool is used in a machine to remove material from a workpiece by a shearing action at the cutting edges of the tool. Cutting tool data that can be described by ISO/TS 13399 (all parts) include, but are not limited to, everything between the workpiece and the machine tool. Information about inserts, solid tools, assembled tools, adaptors, components and their relationships can be represented by ISO/TS 13399 (all parts). The increasing demand providing the end-user with 3D models for the purposes defined above is the basis for the development of this series of International Standards.

The objective of ISO/TS 13399 (all parts) is to provide the means to represent the information that describes cutting tools in a computer sensible form that is independent from any particular computer system. The representation will facilitate the processing and exchange of cutting tool data within and between different software systems and computer platforms and support the application of this data in manufacturing planning, cutting operations and the supply of tools. The nature of this description makes it suitable not only for neutral file exchange, but also as a basis for implementing and sharing product databases and for archiving. The methods that are used for these representations are those developed by ISO/TC 184/SC 4 for the representation of product data by using standardized information models and reference dictionaries.

Definitions and identifications of dictionary entries are defined by means of standard data that consist of instances of the EXPRESS entity data types defined in the common dictionary schema, resulting from a joint effort between ISO/TC 184/SC 4 and IEC/TC 3/SC 3D, and in its extensions defined in ISO 13584-24 and ISO 13584-25.

© ISO 2016 – All rights reserved
Documents
Document Sharing Hub
Full document details: PD ISO/TS 13399-307:2016

Cutting tool data representation and exchange —

Part 307: Creation and exchange of 3D models — End mills for indexable inserts

1 Scope

This part of ISO/TS 13399 specifies a concept for the design of tool items, limited to any kind end mills for indexable inserts, together with the usage of the related properties and domains of values.

This part of ISO/TS 13399 specifies a common way of design simplified models that contain the following:

— definitions and identifications of the design features of end mills for indexable inserts, with an association to the used properties;

— definitions and identifications of the internal structure of the 3D model that represents the features and the properties of end mills for indexable inserts.

The following are outside the scope of this part of ISO/TS 13399:

— applications where these standard data may be stored or referenced;

— concept of 3D models for cutting tools;

— concept of 3D models for cutting items;

— concept of 3D models for other tool items not being described in the scope of this International Standard;

— concept of 3D models for adaptive items;

— concept of 3D models for assembly items and auxiliary items.

2 Normative references

The following referenced documents, in whole or in part, are indispensable for the application of this document. For dated references, only the edition cited applies. For undated references, the latest edition of the referenced document (including any amendments) applies.

ISO 5610 (all parts), *Tool holders with rectangular shank for indexable inserts*

ISO/TS 13399-3, *Cutting tool data representation and exchange — Part 3: Reference dictionary for tool items*

ISO/TS 13399-4, *Cutting tool data representation and exchange — Part 4: Reference dictionary for adaptive items*

ISO/TS 13399-50, *Cutting tool data representation and exchange — Part 50: Reference dictionary for reference systems and common concepts*

ISO/TS 13399-60, *Cutting tool data representation and exchange — Part 60: Reference dictionary for connection systems*

ISO/TS 13399-80, *Cutting tool data representation and exchange — Part 80: Creation and exchange of 3D models — Overview and principles*

Documents
Document Sharing Hub

© ISO 2016 – All rights reserved

Full document details: PD ISO/TS 13399-307:2016

ISO/TS 13399-201, *Cutting tool data representation and exchange — Part 201: Creation and exchange of 3D models — Regular inserts*

3 Starting elements, coordinate systems, planes

3.1 General

The modelling of the 3D models shall be done by means of nominal dimensions.

WARNING — There is no guarantee that the 3D model, created according to the methods described in this part of ISO/TS 13399, is a true representation of the physical tool supplied by the tool manufacturer. If the models are used for simulation purposes, e.g. CAM simulation, it shall be taken into consideration that the real product dimensions can differ from those nominal dimensions.

NOTE Some definitions are taken from ISO/TS 13399-50.

3.2 Reference system

The reference system consists of the following standard elements as shown in Figure 1:

— **standard coordinate system** — right-handed, rectangular Cartesian system in three-dimensional space, called “primary coordinate system” (PCS);

— **three orthogonal planes** — planes in the coordinate system that contain the axis of the system, named “xy-plane” (XYP), “xz-plane” (XZP) and “yz-plane” (YZP);

— **three orthogonal axes** — axes built as intersections of the three orthogonal plane lines ,respectively, named “x-axis” (XA), “y-axis” (YA) and “z-axis” (ZA).

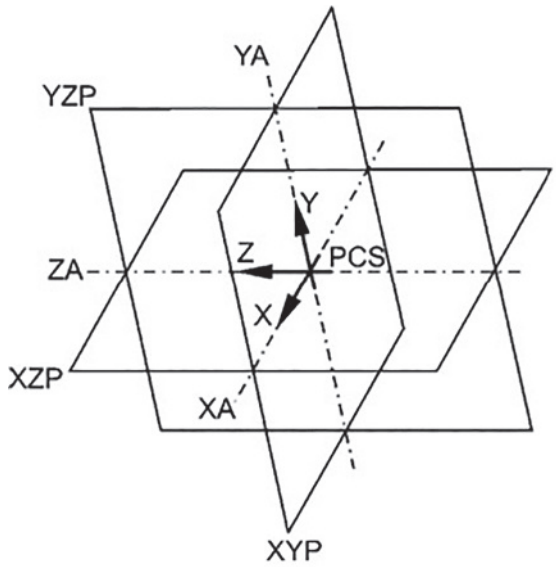

Figure 1 — Reference system

For virtually mounting end mills on to an adaptive item, an additional reference system shall be defined. This reference system shall be called “mounting coordinate system” (MCS). It is located at the starting point of the protruding length of a tool item. The orientation is shown in Figure 2.

© ISO 2016 – All rights reserved
Documents
Document Sharing Hub
Full document details: PD ISO/TS 13399-307:2016

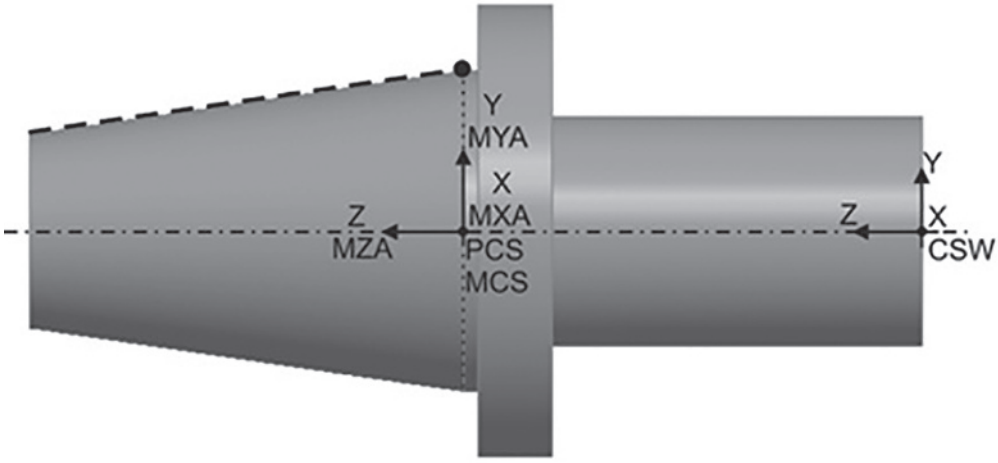

Figure 2 — Orientation of "PCS" and "MCS" reference system (example)

3.3 Coordinate system at the cutting part

The coordinate system at the cutting part, named "coordinate system in process" (CIP), with a defined distance to the PCS shall be oriented as follows:

— the origin is on a plane that is parallel to the xy-plane of PCS and is located on the most front cutting point;

— z-axis of CIP points to the PCS;

— z-axis of CIP is collinear to the z-axis of PCS;

— y-axis of CIP is parallel to the y-axis of PCS.

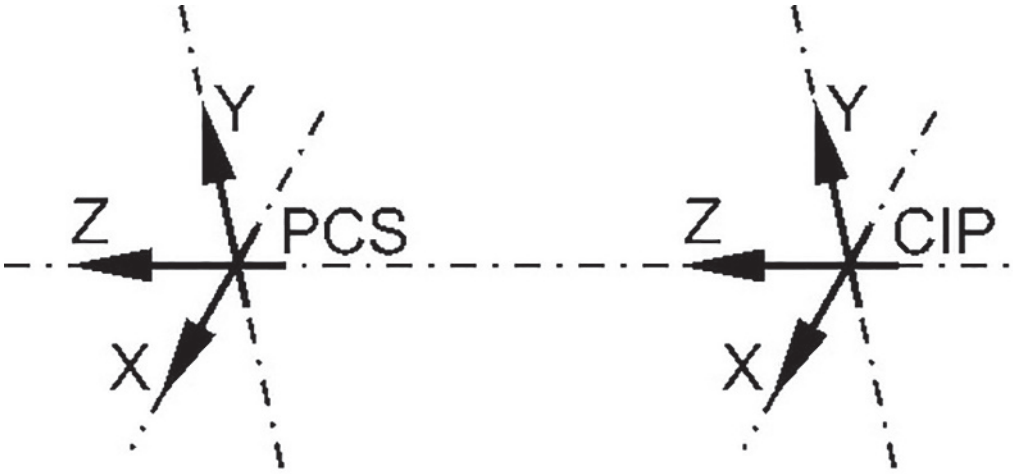

Figure 3 — Orientation of CIP

If the 3D modelling software gives the possibility to include interfaces for components to, for example, mount a front-cutting disk onto a complete cutting tool, it shall be advised to use the coordinate system "CIP".

If necessary, another designation should be given to the interface of the component (dependent on the software). The name is "CSIF" ("coordinate system interface") and includes the coordinate system "CIP".

© ISO 2016 – All rights reserved

Documents
Document Sharing Hub
Full document details: PD ISO/TS 13399-307:2016

3.4 Planes

The modelling takes place based on planes according to Figure 4 and shall be used as reference, if applicable. Therefore, it shall be ensured that the model is able to vary or single features of independent design features shall be suppressed by means of changing the value of one or more parameter of the model design. Furthermore, the identification of the different areas shall be simplified in using the plane concept, even if they contact each other with the same size, e.g. chip flute, shank, and so on.

For the 3D visualization of end mills for indexable inserts, the general planes shall be determined as follows and as in Figure 4:

— "TEP" — the tool end plane is located at that end of the connection that points away from the workpiece; if the tool does not have a contact surface and/or a gauge line, the TEP is coplanar with the xy-plane of the PCS; the overall length (OAL) is the distance between CIP and TEP;

— "CLP" — (cutting length plane) plane for the cutting depth maximum (APMX), based on "CIP";

— "HEP" — (head end plane) plane that determines the most front of the end mill, based on "CIP" and is coplanar to the xy-plane of CIP;

— "LHP" — plane for the head length (LH), based on "CIP";

— "LPRP" — plane for the protruding length (LPR), based on "MCS";

— "LSP" — plane for the shank length (LS), based on "PCS";

— "LUP" — plane for the maximum usable length (LUX), based on "CIP".

Other planes, if necessary, are defined in the appropriate Clauses.

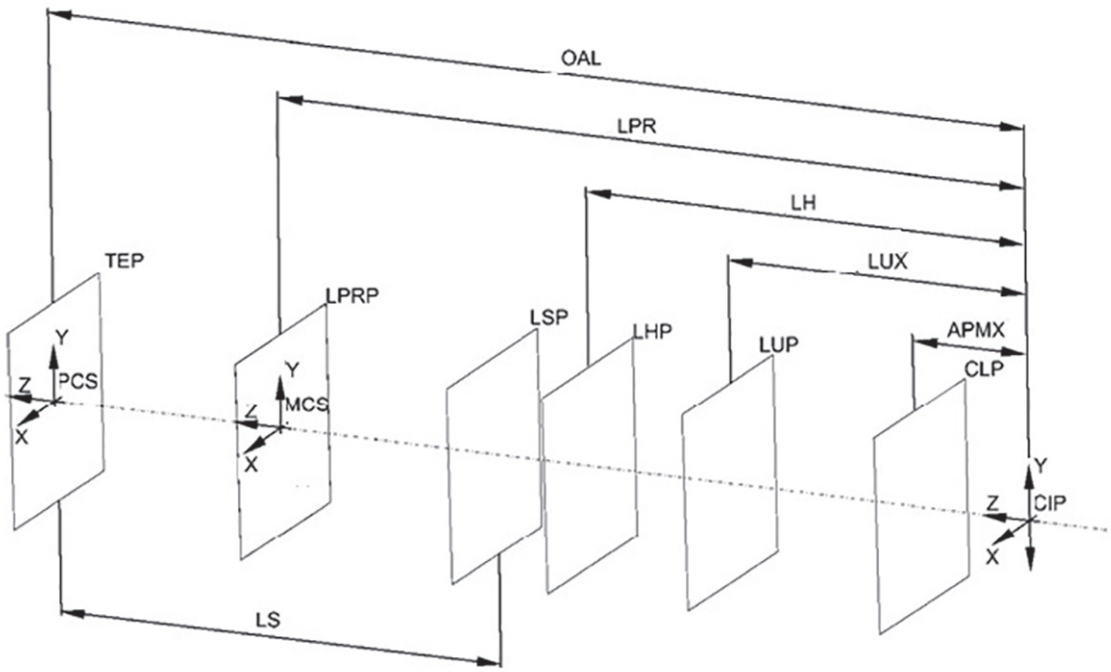

Figure 4 — Planes for design

© ISO 2016 – All rights reserved
Documents
Document Sharing Hub
Full document details: PD ISO/TS 13399-307:2016

3.5 Design of the pocket seat and cutting reference point (CRP) of the insert

NOTE If regular inserts have a specific design and are not interchangeable between vendors, the location of the MCS is at the manufacturer's discretion, either on the top face or on the bottom face. The orientation of the axis has to follow the definitions in this part of ISO/TS 13399.

The final position of the pocket seat shall be designed by means of designing an insert. This feature shall be used for subtraction from the tool body. To give the possibility to use inserts with different corner radii, only that corner defining the functional dimensions shall carry the corner radius. The remaining corners shall be designed without a corner radius.

The size of the corner radius shall meet the determination of a master radius. Table 1 shows the size of the corner radii, dependent from the inscribed circle as given in ISO 5610.

Table 1 — Dependency of inscribed circle and corner radius

Dimensions in millimetres

Inscribed circle	Corner radius
3,970	0,4
4,760	0,4
5,560	0,4
6,350	0.4
9,525	0,8
12,700	0,8
15,875	1,2
19,050	1,2
22,250	2,4
25,400	2,4
31,750	2,4

NOTE At rectangular (style L) and parallelogram-shaped (styles A, B, K) inserts, the longer side that is equal to the inscribed circle determines the size of the corner radius.

MCS-coordinate system of the insert (MCS_INSERT) and the PCS-coordinate system of the insert (PCS_INSRT) are oriented differently to the primary coordinate system of the tool (PCS_TOOL). The orientation is shown in Figures 5 and 7.

The neutral position of an insert is determined as follows.

a) The origin of the MCS_INSERT shall be positioned onto the centre of the inscribed circle; at rectangular and parallelogram-shaped inserts the point of origin shall be determined through the intersection of the two diagonal lines.

b) The x-axis of MCS_INSERT shall be parallel to the x-axis of PCS_INSERT.

c) The y-axis of MCS_INSERT shall be parallel to the y-axis of PCS_INSERT.

d) The z-axis of MCS_INSERT shall be parallel to the z-axis of PCS_INSERT.

e) The x-axis of PCS_INSERT shall be collinear to the x-axis of PCS_TOOL.

f) The y-axis of PCS_INSERT shall be collinear to the z-axis of PCS_TOOL.

g) The Z–axis of PCS_INSERT shall be collinear to the y-axis of PCS_TOOL.

© ISO 2016 – All rights reserved

Documents
Document Sharing Hub
Full document details: PD ISO/TS 13399-307:2016

Positioning of the insert into the functional location shall be done as follows.

a) Design with end-cutting edge angle on a right-handed tool, commonly used on the face of the end mill, typically for spot-facing cutters.

   1) Only inserts located in the second quadrant of the primary coordinate system of the insert, also called “left handed” inserts, shall be used.

   2) The insert shall be rotated by 90-KAPR degrees in mathematic positive direction (counter-clockwise) about the y-axis of the PCS_TOOL.

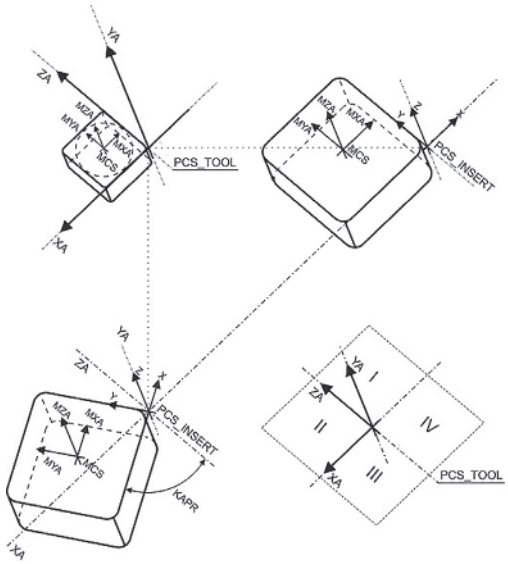

Figure 5 — Orientation of PCS_INSERT, MCS_INSERT and PCS_TOOL on end cutting edge angle

   3) The cutting reference point (CRP), defined in ISO/TS 13399-50, is the point where the functional dimensions are based.

   4) The coordinate system of CRP (CS_CRP) is defined as follows:

      i) the x-axis of CS_CRP is collinear to the x-axis of PCS_INSERT;

      ii) the y-axis of CS_CRP is parallel to the y-axis of PCS_INSERT;

      iii) the z-axis of CS_CRP is parallel to the z-axis of PCS_INSERT.

   5) If the tool is defined with an axial rake and a radial rake angle that are unequal 0 degree, the insert have to be rotated about its CRP. The orientation is shown in Figure 6. Therefore, two axes shall be added:

      i) GAMP-axis positioned on CRP with its vector that is parallel to x-axis of PCS_TOOL — defines the rotation of axial rake angle;

      ii) GAMF-axis positioned on CRP with its vector that is parallel to z-axis of PCS_TOOL — defines the rotation of radial rake angle.

© ISO 2016 – All rights reserved
Documents
Document Sharing Hub
Full document details: PD ISO/TS 13399-307:2016

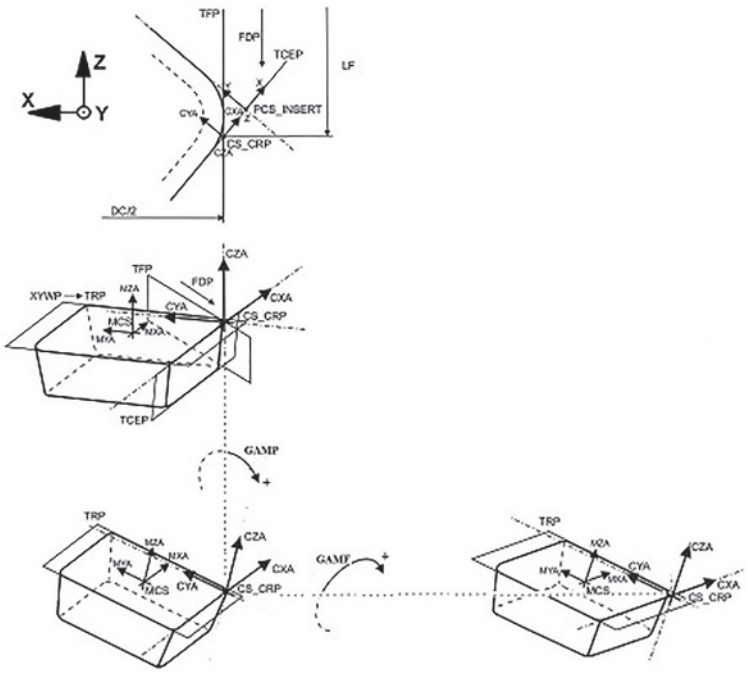

Figure 6 — Axial and radial rake angle on insert

b) Design with side-cutting edge angle on a right-handed tool, commonly used on the periphery of the end mill, typically for all kinds of side-cutting end mills.

1) Only inserts located in the first quadrant of the primary coordinate system of the insert, also called “right handed” or “neutral” inserts, shall be used.

2) The insert shall be rotated by KAPR degrees in mathematic positive direction (counter-clockwise) about the y-axis of PCS_TOOL.

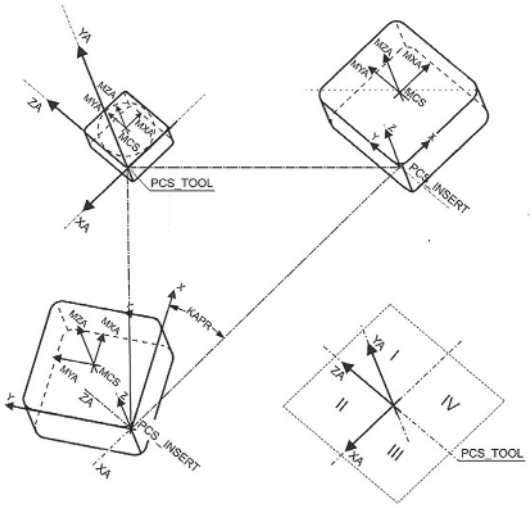

Figure 7 — Orientation of PCS_INSERT, MCS_INSERT and PCS_TOOL on side-cutting edge angle

3) The cutting reference point (CRP), defined in ISO/TS 13399-50, is the point where the functional dimensions are based.

The position of the C_CRP is defined with the properties DC/2 and LF.

© ISO 2016 – All rights reserved

Documents
Document Sharing Hub
Full document details: PD ISO/TS 13399-307:2016

3.6 Adjustment coordinate system on workpiece side

3.6.1 General

For mounting components, the coordinate systems “CSWx_y” (coordinate system workpiece side) shall be defined according to ISO/TS 13399-50.

3.6.2 Designation of the coordinate system workpiece side

Case 1 One coordinate system at the workpiece side shall be designated as “CSW”.

Case 2 One coordinate system at workpiece side on different levels shall be designated as “CSWx”, e.g. “CSW1”, “CSW2”. The numbering starts at the workpiece side and ends at the machine side in the direction of the positive z-axis.

Case 3 Multiple coordinate systems at one level, but different angles and not at the centre of the tool axis shall be designated with “CSWx_y”, where the “x” defines the level and the “y” defines the number of the coordinate system itself. The counting starts at the three o’clock position, counting in counter-clockwise direction while looking towards the machine spindle (positive z-axis).

Case 4 Multiple coordinate systems at one level, one angle and different diameters shall be designated as described in Case 3. The counting shall start at the smallest diameter.

Case 5 Multiple coordinate systems at one level, different angles and different diameters shall be designated as described in Case 3. The counting shall start at the smallest diameter and at the three o’clock position, counting in counter-clockwise direction while looking towards the machine spindle (positive z-axis).

Figure 8 shows an example of the arrangement of the CSWs.

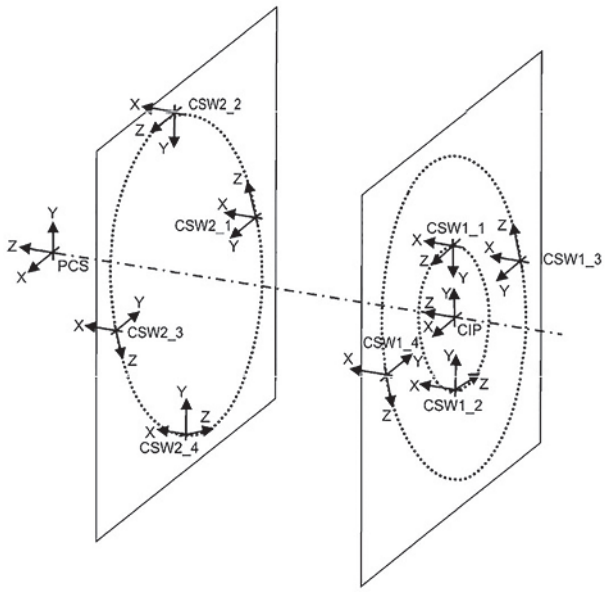

Figure 8 — Adjustment coordinate system on workpiece side

The MCS_INSERT shall be placed onto the CSWx_y of the tool with determinations as follows:

— the x-axis of CSWx_y is parallel to the x-axis of CRP;

— the y-axis of CSWx_y is parallel to the y-axis of CRP;

— the z-axis of CSWx_y is parallel to the z-axis of CRP.

© ISO 2016 – All rights reserved
Documents
Document Sharing Hub
Full document details: PD ISO/TS 13399-307:2016

Figure 9 shows an example of the mounting of insert onto the pocket seat.

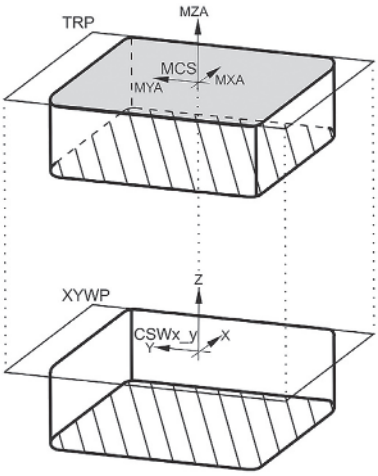

Figure 9 — Mounting of insert onto pocket seat

4 Design of the model

4.1 General

The sketches (outline contours) and features of the crude model may not contain details like slots, chamfers, roundings and grooves. These features shall be designed as separate design elements after the crude geometry and shall be grouped as detail geometry. Based on the non-cutting features (group "NOCUT"), the cutting features shall be loaded as assembly parts (group "CUT") into the basic model. For the group "DETAILS", see Clause 14.

The sequence of the model structure shall be kept as described and there shall be no reference between the connection and the basic body. Only the group "DETAILS" may contain references to other design features.

End mills for indexable inserts shall be designed as rotational features:

— basic geometry containing connection and tool body designed as rotating body;

— geometry of the tool body (chip flute, pocket seat, etc.);

— geometry of the connection;

— details (chamfers, roundings, slots, etc.).

The basic shapes of end mills are designed with cylindrical shank exemplarily and positioned onto the PCS.

All examples are designed with 0 degree axial and radial rake angle.

The total amount of design elements is dependent on the level of detail and on the complexity of the cutting tool.

The specific model structures of the different shapes of end mills for indexable inserts are described in the next Clauses of this part of ISO/TS 13399.

4.2 Necessary parameters for the connection interface feature

Information about the connection interface code shall be filled as properties within the model and named as parameters as listed in Table 2:

© ISO 2016 – All rights reserved

Documents
Document Sharing Hub
Full document details: PD ISO/TS 13399-307:2016

Table 2 — Parameter list for connection interface feature

Preferred symbol	Description	Source of symbol	ISO-ID number
CCMS	connection code machine side	ISO/TS 13399-3 and ISO/TS 13399–4	71D102AE3B252
CCTMS	connection code type machine side	ISO/TS 13399-60 short name of subtype of connection_interface_feature	feature_class
CCFMS	connection code form machine side	ISO/TS 13399-60 number of the variant of the subtype of connection_interface_feature	feature_class
CZCMS	connection size code machine side	connection size code (dependent of side)	71FC193318002

The information above and other relevant properties shall be incorporated into the model as parameters or shall be taken as a separate file.

4.3 Necessary properties for inserts

4.3.1 General

Necessary properties for the design of the pocket seat features shall be taken in accordance with the defined properties for cutting items (see ISO/TS 13399-2). To be able to differentiate between tool-item and cutting-item properties, a postfix shall be added to the preferred symbols of the cutting-item properties. The postfix has the same code and sequence as the different coordinate systems on workpiece side that are defined in 3.6.

4.3.2 Properties for equilateral, equiangular and equilateral, non-equiangular inserts

Equilateral and equiangular inserts are the following:

— H — hexagonal insert;

— O — octogonal insert;

— P — pentagonal insert;

— S — square insert;

— T — triangular insert.

Equilateral and non-equiangular inserts are the following:

— C, D, E, M, V — rhombic insert;

— W — trigon insert.

Table 3 lists the properties for regular inserts with inscribed circle.

© ISO 2016 – All rights reserved
Documents
Document Sharing Hub
Full document details: PD ISO/TS 13399-307:2016

Table 3 — Properties for modelling equilateral, equiangular and equilateral, non-equiangular pocket seats

Preferred name	Preferred symbol
clearance angle major	AN
insert included angle	EPSR
insert included angle minor	EPSRN
inscribed circle diameter	IC
cutting edge length[a]	L[a]
corner radius	RE
corner radius minor	REN
insert thickness	S
[a] L is calculated and is dependent on IC and EPSR.	

4.3.3 Properties for non-equilateral, equiangular and non-equilateral, non-equiangular inserts

Non-equilateral and equiangular inserts:

— L — rectangular insert

Non-equilateral and non-equiangular inserts:

— A, B, K — parallelogram-shaped insert

Table 4 lists the properties for regular inserts of rectangular and parallelogram shape.

Table 4 — Properties for modelling non-equilateral, equiangular and non-equilateral, non-equiangular pocket seats

Preferred name	Preferred symbol
clearance angle major	AN
clearance angle minor	ANN
insert included angle	EPSR
insert length	INSL
corner radius	RE
corner radius minor	REN
insert thickness	S
insert width	W1
cutting edge length[a]	L[a]
[a] L is calculated and is dependent on INSL and EPSR.	

4.3.4 Design of the pocket seat feature

The design shall be done in accordance with ISO/TS 13399-201, but without any corner configuration on the opposite side where the functional dimensions are based.

5 End mill, non-centre cutting, single row

5.1 General

Figure 10 shows the properties to be used for the design of a single row, non-centre cutting end mill.

© ISO 2016 – All rights reserved

Documents
Document Sharing Hub
Full document details: PD ISO/TS 13399-307:2016

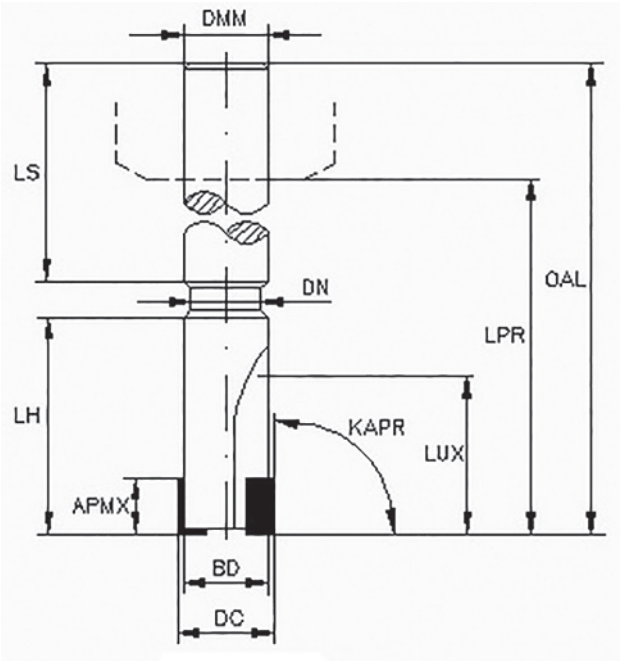

Figure 10 — Determination of properties of single row, non-centre cutting end mills

5.2 Necessary properties

Table 5 lists the properties needed for the modelling of single row, non-centre cutting end mills.

Table 5 — Properties for the modelling of a single row, non-centre cutting end mill

Preferred name	Preferred symbol
depth of cut maximum	APMX
plunge depth maximum	AZ
body diameter	BD
cutting diameter	DC
shank diameter	DMM
neck diameter	DN
rake angle radial	GAMF
rake angle axial	GAMP
tool cutting edge angle	KAPR
head length	LH
protruding length	LPR
usable length maximum	LUX
shank length	LS
overall length	OAL
chip flute offset distance	OFFCFEX
ramping angle maximum	RMPX
face effective cutting edge count	ZEFF
face mounted insert count	ZNF

© ISO 2016 – All rights reserved
Documents
Document Sharing Hub
Full document details: PD ISO/TS 13399-307:2016

5.3 Basic geometry

The basic of that part is a rotational design feature, which contains all elements between the plane "TEP" und the separation plane "CIP" to the cutting part.

The sketch (outline contour) includes all the real measure elements above and shall be designed on the xz-plane of the "PCS". The rotational axis is the standard z-axis.

The design of the sketch shall be as follows.

— The sketch shall be determined as a half section.

— The sketch shall be constrained to the coordinate system "PCS" and to the planes "TEP" and "CIP" according to Figure 8. If the CAD software does not support the use of datum planes, the sketch shall be fully dimensioned. Otherwise the distances shall be in conjunction with the defined datum planes.

— The dimensioning shall be done with the appropriate properties listed in Table 2.

The sketch shall be revolved about the z-axis by 360°.

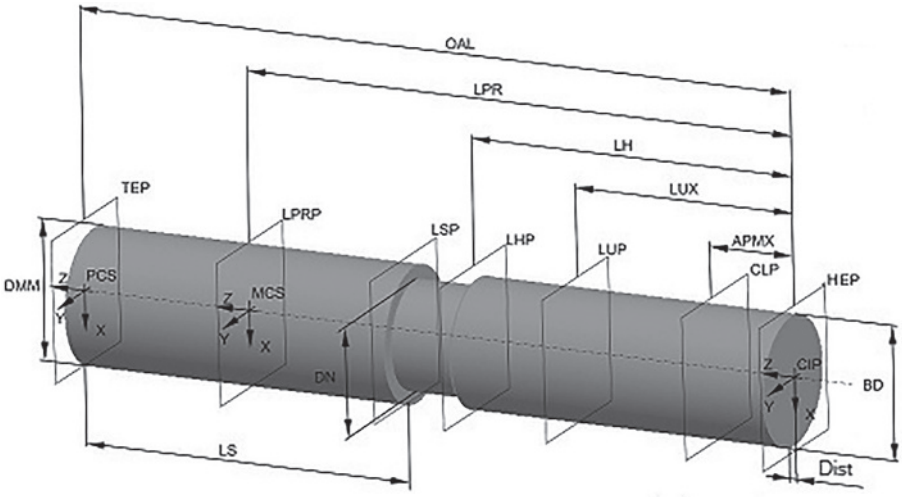

Figure 11 — Basic geometry of an end mill

NOTE The distance between the CIP and the most front of the body may also be defined as property "AZ", if applicable.

The parameter "Dist" is a function of the insert properties "insert thickness" (S), "clearance angle major" (AN) and an offset, which is in the range of 0,2 mm to 0,5 mm. It is calculated using Formula (1):

$$\text{Dist} = S \times \tan(AN) + \text{offset} \quad (1)$$

5.4 Determination of the position of the mounting coordinate system of insert

A coordinate system workpiece side and the corresponding planes shall be determined for each insert in accordance with their definitions given in ISO/TS 13399-50.

The coordinate systems, "CSWx_y", shall be referenced to "PCS". The position is determined through:

— the dimensions DC, LF;

— the geometry of the insert;

— the cutting reference point.

© ISO 2016 – All rights reserved

Documents
Document Sharing Hub
Full document details: PD ISO/TS 13399-307:2016

For the determination of the CSWs, Figure 12 illustrates the location of the CSWs of single row, non-centre cutting end mills.

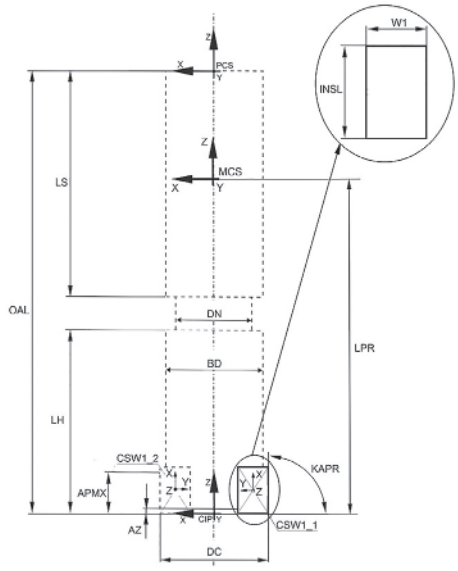

Figure 12 — Determination of CSWx_y of single row, non-centre cutting end mills

For the determination of the CSWs, Figure 13 illustrates the location of the CSWs in relation to PCS.

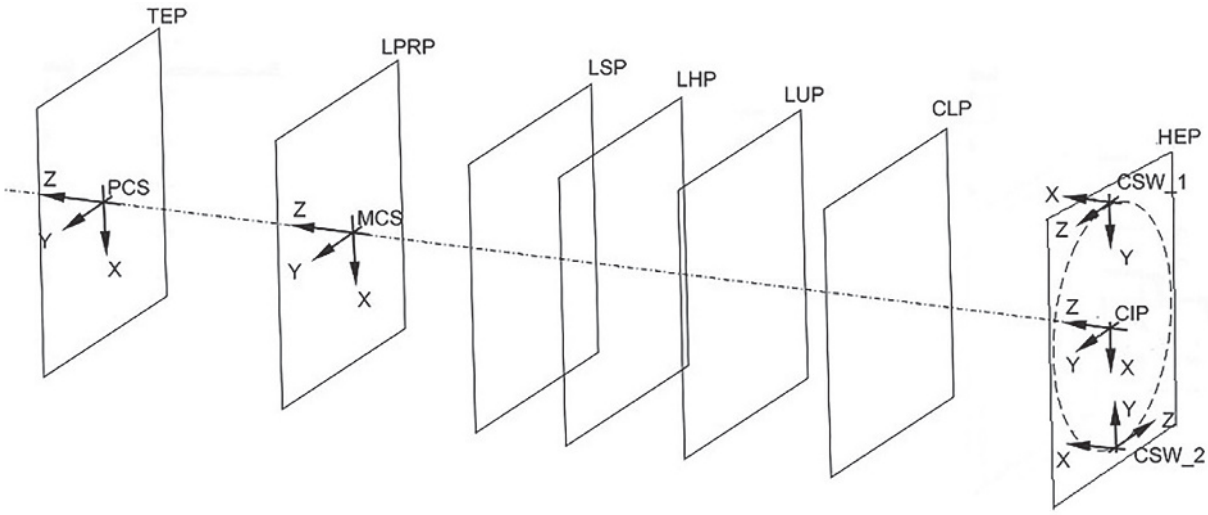

Figure 13 — Location of CSWs

5.5 Chip flute and pocket seat

The chip flute shall be designed as solid body for subtraction from the tool body. The sketch of the chip flute shall be referenced to the xz-plane of PCS and to CIP. The chip flute body shall be positioned to its final position in using the properties “GAMF”, “GAMP”, “KAPR” and the point “CRP” or the property “OFFCFEX”.

The number and location of the chip flutes shall be ordered using the CAD-arrangement function and with the parameter “OFFCFEX”, as shown in Figure 14.

© ISO 2016 – All rights reserved
Documents
Document Sharing Hub
Full document details: PD ISO/TS 13399-307:2016