PD ISO/TS 13399-309:2016

BSI Standards Publication

Cutting tool data representation and exchange

Part 309: Creation and exchange of 3D models — Tool holders for indexable inserts

bsi.

...making excellence a habit.™

Document Sharing Hub

Full document details: PD ISO/TS 13399-309:2016

National foreword

This Published Document is the UK implementation of ISO/TS 13399-309:2016.

The UK participation in its preparation was entrusted to Technical Committee MTE/18, Tools tips and inserts for cutting applications.

A list of organizations represented on this committee can be obtained on request to its secretary.

This publication does not purport to include all the necessary provisions of a contract. Users are responsible for its correct application.

© The British Standards Institution 2016. Published by BSI Standards Limited 2016

ISBN 978 0 580 83599 5

ICS 25.100.01; 35.240.50

Compliance with a British Standard cannot confer immunity from legal obligations.

This Published Document was published under the authority of the Standards Policy and Strategy Committee on 31 March 2016.

Amendments issued since publication

Date	Text affected

Documents
Document Sharing Hub

Full document details: PD ISO/TS 13399-309:2016

TECHNICAL SPECIFICATION

ISO/TS 13399-309

First edition
2016-03-01

Cutting tool data representation and exchange —

Part 309: Creation and exchange of 3D models — Tool holders for indexable inserts

Représentation et échange des données relatives aux outils coupants —

Partie 309: Création et échange de modèles 3D — Porte outil à plaquette amovible

Reference number
ISO/TS 13399-309:2016(E)

Documents
Document Sharing Hub

© ISO 2016

Full document details: PD ISO/TS 13399-309:2016

COPYRIGHT PROTECTED DOCUMENT

© ISO 2016, Published in Switzerland

All rights reserved. Unless otherwise specified, no part of this publication may be reproduced or utilized otherwise in any form or by any means, electronic or mechanical, including photocopying, or posting on the internet or an intranet, without prior written permission. Permission can be requested from either ISO at the address below or ISO's member body in the country of the requester.

ISO copyright office
Ch. de Blandonnet 8 • CP 401
CH-1214 Vernier, Geneva, Switzerland
Tel. +41 22 749 01 11
Fax +41 22 749 09 47
copyright@iso.org
www.iso.org

© ISO 2016 – All rights reserved

Documents
Document Sharing Hub

Full document details: PD ISO/TS 13399-309:2016

Contents

Page

Foreword ... **vi**

Introduction ... **viii**

1 Scope ... **1**

2 Normative references ... **1**

3 Starting elements, coordinate systems, planes ... **2**
3.1 General ... 2
3.2 Reference system (PCS — primary coordinate system) ... 2
3.3 Tool item position ... 2
3.3.1 Prismatic tool position ... 3
3.3.2 Round tool position ... 3
3.4 Planes ... 4
3.5 Cutting reference point (CRP) ... 5
3.6 Design of the pocket seat ... 8
3.7 Adjustment coordinate system on workpiece side ... 12
3.7.1 General ... 12
3.7.2 Designation of the coordinate system workpiece side ... 12

4 Design of the model ... **14**
4.1 Necessary parameters for the connection interface feature ... 14
4.2 Necessary properties for insert and pocket seat ... 15
4.2.1 General ... 15
4.2.2 Properties for equilateral, equiangular and equilateral, non-equiangular inserts ... 15
4.2.3 Properties for non-equilateral, equiangular and non-equilateral, non-equiangular inserts ... 15
4.2.4 Properties for round inserts ... 16
4.2.5 Design of the pocket seat feature ... 16

5 Tool holder for longitudinal and transversal turning ... **17**
5.1 General ... 17
5.2 Necessary properties ... 17
5.3 Basic geometry ... 18
5.4 Turning tool with pocket seat and top surface offset ... 21
5.5 Turning tool assembly ... 21
5.6 Boring bar body ... 22

6 Turning tool for external threading ... **24**
6.1 General ... 24
6.2 Necessary properties ... 24
6.3 Basic geometry ... 25
6.4 Turning tool with pocket seat and top surface offset ... 25
6.5 Turning tool assembly ... 26

7 Boring bar for internal threading ... **27**
7.1 General ... 27
7.2 Necessary properties ... 27
7.3 Basic geometry ... 28
7.4 Boring bar with pocket seat and top surface offset ... 29
7.5 Boring bar assembly ... 30

8 Turning tool for OD grooving and parting ... **30**
8.1 General ... 30
8.2 Necessary properties ... 30
8.3 Basic geometry ... 32
8.4 Grooving tool with pocket seat and top surface offset ... 33
8.5 Grooving and cut-off tool assembly ... 33

AVA Documents
Document Sharing Hub

© ISO 2016 – All rights reserved

Full document details: PD ISO/TS 13399-309:2016

9 Boring bar for ID grooving ... 34
9.1 General ... 34
9.2 Necessary properties ... 34
9.3 Basic geometry ... 35
9.4 Boring bar with pocket seat and top surfaces ... 36
9.5 Grooving boring bar assembly ... 37

10 Pull back boring bar ... 37
10.1 General ... 37
10.2 Necessary properties ... 38
10.3 Basic geometry ... 38
10.4 Boring bar with pocket seat and top surfaces ... 39
10.5 Pull back boring bar assembly ... 39

11 System tool for external turning ... 40
11.1 General ... 40
11.2 Necessary properties ... 40
11.3 Basic geometry ... 41
11.4 System tool with pocket seat and top surfaces ... 41
11.5 Assembly of system tool for external turning ... 42

12 System tool for external threading ... 43
12.1 General ... 43
12.2 Necessary properties ... 43
12.3 Basic geometry ... 44
12.4 System tool with pocket seat and top surfaces ... 44
12.5 Assembly of a system tool for external threading ... 44

13 System tool for internal turning ... 44
13.1 General ... 44
13.2 Necessary properties ... 45
13.3 Basic geometry ... 45
13.4 System tool with pocket seat and top surfaces ... 45
13.5 System tool for internal turning assembly ... 45

14 System tool for internal threading ... 46
14.1 General ... 46
14.2 Necessary properties ... 46
14.3 Basic geometry ... 46
14.4 System tool with pocket seat and top surfaces ... 46
14.5 System tool for internal threading assembly ... 46

15 System tool for OD grooving and/or cut-off ... 47
15.1 General ... 47
15.2 Necessary properties ... 47
15.3 Basic geometry ... 48
15.4 Grooving tool with pocket seat and top surface offset ... 48
15.5 System tool for OD grooving and parting assembly ... 48

16 System tool for ID grooving ... 49
16.1 General ... 49
16.2 Necessary properties ... 49
16.3 Basic geometry ... 49
16.4 Grooving tool with pocket seat and top surface offset ... 49
16.5 System tool for ID grooving assembly ... 49

17 Pull back system tool ... 50
17.1 General ... 50
17.2 Necessary properties ... 50
17.3 Basic geometry ... 50
17.4 System tool with pocket seat and top surfaces ... 51
17.5 Pull back system tool assembly ... 51

Documents
Document Sharing Hub

© ISO 2016 – All rights reserved

Full document details: PD ISO/TS 13399-309:2016

18 System tool, neutral design for OD turning **51**
18.1 General 51
18.2 Necessary properties 51
18.3 Basic geometry 52
18.4 System tool with pocket seat and top surfaces 52
18.5 System tool, neutral design for OD turning assembly 52

19 Design of details **52**
19.1 Basics for modelling 52
19.2 Fixing threads for inserts 52
19.3 Contact surfaces/drive keys — Orientation 52
19.4 Chamfers and roundings 52

20 Attributes of surfaces — Visualization of the model features **52**

21 Structure of the design elements (tree of model) **53**

22 Data exchange model **54**

Annex A (normative) **Mirror planes for left-handed tools** **56**

Annex B (informative) **Information about nominal dimensions** **57**

Bibliography **58**

© ISO 2016 – All rights reserved

Documents
Document Sharing Hub
Full document details: PD ISO/TS 13399-309:2016

Foreword

ISO (the International Organization for Standardization) is a worldwide federation of national standards bodies (ISO member bodies). The work of preparing International Standards is normally carried out through ISO technical committees. Each member body interested in a subject for which a technical committee has been established has the right to be represented on that committee. International organizations, governmental and non-governmental, in liaison with ISO, also take part in the work. ISO collaborates closely with the International Electrotechnical Commission (IEC) on all matters of electrotechnical standardization.

The procedures used to develop this document and those intended for its further maintenance are described in the ISO/IEC Directives, Part 1. In particular the different approval criteria needed for the different types of ISO documents should be noted. This document was drafted in accordance with the editorial rules of the ISO/IEC Directives, Part 2 (see www.iso.org/directives).

Attention is drawn to the possibility that some of the elements of this document may be the subject of patent rights. ISO shall not be held responsible for identifying any or all such patent rights. Details of any patent rights identified during the development of the document will be in the Introduction and/or on the ISO list of patent declarations received (see www.iso.org/patents).

Any trade name used in this document is information given for the convenience of users and does not constitute an endorsement.

For an explanation on the meaning of ISO specific terms and expressions related to conformity assessment, as well as information about ISO's adherence to the WTO principles in the Technical Barriers to Trade (TBT) see the following URL: Foreword - Supplementary information

The committee responsible for this document is ISO/TC 29, *Small tools*.

ISO/TS 13399 consists of the following parts, under the general title *Cutting tool data representation and exchange*:

— *Part 1: Overview, fundamental principles and general information model*

— *Part 2: Reference dictionary for the cutting items* [Technical Specification]

— *Part 3: Reference dictionary for tool items* [Technical Specification]

— *Part 4: Reference dictionary for adaptive items* [Technical Specification]

— *Part 5: Reference dictionary for assembly items* [Technical Specification]

— *Part 50: Reference dictionary for reference systems and common concepts* [Technical Specification]

— *Part 60: Reference dictionary for connection systems* [Technical Specification]

— *Part 80: Creation and exchange of 3D models — Overview and principles* [Technical Specification]

— *Part 100: Definitions, principles and methods for reference dictionaries* [Technical Specification]

— *Part 150: Usage guidelines* [Technical Specification]

— *Part 201: Creation and exchange of 3D models — Regular inserts* [Technical Specification]

— *Part 202: Creation and exchange of 3D models — Irregular inserts* [Technical Specification]

— *Part 203: Creation and exchange of 3D models — Replaceable inserts for drilling* [Technical Specification]

— *Part 204: Creation and exchange of 3D models — Inserts for reaming* [Technical Specification]

— *Part 301: Concept for the design of 3D models based on properties according to ISO/TS 13399-3: Modelling of thread-cutting taps, thread-forming taps and thread-cutting dies* [Technical Specification]

© ISO 2016 – All rights reserved
Documents
Document Sharing Hub
Full document details: PD ISO/TS 13399-309:2016

— *Part 302: Concept for the design of 3D models based on properties according to ISO/TS 13399-3: Modelling of solid drills and countersinking tools* [Technical Specification]

— *Part 303: Concept for the design of 3D models based on properties according to ISO/TS 13399-3: Modelling of end mills with solid cutting edges* [Technical Specification]

— *Part 304: Concept for the design of 3D models based on properties according to ISO/TS 13399-3: Modelling of milling cutters with arbor hole and solid cutting edges* [Technical Specification]

— *Part 307: Creation and exchange of 3D models — End mills for indexable inserts* [Technical Specification]

— *Part 308: Creation and exchange of 3D models — Milling cutters with arbor hole for indexable inserts* [Technical Specification]

— *Part 309: Creation and exchange of 3D models — Tool holders for indexable inserts* [Technical Specification]

— *Part 311: Creation and exchange of 3D models — Solid reamers* [Technical Specification]

— *Part 312: Creation and exchange of 3D models — Reamers for indexable inserts* [Technical Specification]

— *Part 401: Creation and exchange of 3D models — Converting, extending and reducing adaptive items* [Technical Specification]

— *Part 405: Creation and exchange of 3D models — Collets* [Technical Specification]

The following parts are under preparation:

— *Part 70: Graphical data layout — Layer settings for tool designs* [Technical Specification]

— *Part 71: Graphical data layout — Creation of documents for the standardized data exchange — Graphical product information* [Technical Specification]

— *Part 72: Creation of documents for the standardized data exchange — Definition of properties for drawing header and their XML-data exchange* [Technical Specification]

— *Part 305: Creation and exchange of 3D models — Modular tooling systems with adjustable cartridges for boring* [Technical Specification]

— *Part 310: Creation and exchange of 3D models — Turning tools with carbide tips* [Technical Specification]

© ISO 2016 – All rights reserved

Documents
Document Sharing Hub
Full document details: PD ISO/TS 13399-309:2016

Introduction

This part of ISO/TS 13399 defines the concept, the terms and the definitions on how to design simplified 3D models of tool holders for indexable inserts that can be used for NC-programming, simulation of the manufacturing processes and the determination of collision within these processes. It is not intended to standardize the design of the cutting tool itself.

A cutting tool is used in a machine to remove material from a workpiece by a shearing action at the cutting edges of the tool. Cutting tool data that can be described by ISO/TS 13399 (all parts) include, but are not limited to, everything between the workpiece and the machine tool. Information about inserts, solid tools, assembled tools, adaptors, components and their relationships can be represented by ISO/TS 13399 (all parts). The increasing demand providing the end user with 3D models for the purposes defined above is the basis for the development of this series of International Standards.

The objective of this International Standard is to provide the means to represent the information that describes cutting tools in a computer sensible form that is independent from any particular computer system. The representation will facilitate the processing and exchange of cutting tool data within and between different software systems and computer platforms and support the application of this data in manufacturing planning, cutting operations and the supply of tools. The nature of this description makes it suitable not only for neutral file exchange, but also as a basis for implementing and sharing product databases and for archiving. The methods that are used for these representations are those developed by ISO/TC 184/SC 4 for the representation of product data by using standardized information models and reference dictionaries.

Definitions and identifications of dictionary entries are defined by means of standard data that consist of instances of the EXPRESS entity data types defined in the common dictionary schema, resulting from a joint effort between ISO/TC 184/SC 4 and IEC/TC 3/SC 3D and in its extensions defined in ISO 13584-24 and ISO 13584-25.

© ISO 2016 – All rights reserved
Documents
Document Sharing Hub
Full document details: PD ISO/TS 13399-309:2016

Cutting tool data representation and exchange —

Part 309: Creation and exchange of 3D models — Tool holders for indexable inserts

1 Scope

This part of ISO/TS 13399 specifies a concept for the design of turning tools for indexable inserts, together with the usage of the related properties and domains of values.

This part of ISO/TS 13399 specifies a common way of designing simplified models that contain the following:

— definitions and identifications of the design features of turning tools for indexable inserts, with an association to the descriptive properties and dimensions;

— definition and identification of the 3D model internal structure that represents the features and the properties of turning tools for indexable inserts.

The following are outside the scope of this part of ISO/TS 13399:

— applications where these standard data may be stored or referenced;

— concept of 3D models for cutting tools;

— concept of 3D models for cutting items;

— concept of 3D models for other tool items not being described in the scope of this part of ISO/TS 13399;

— concept of 3D models for adaptive items;

— concept of 3D models for assembly items and auxiliary items.

2 Normative references

The following documents, in whole or in part, are normatively referenced in this document and are indispensable for its application. For dated references, only the edition cited applies. For undated references, the latest edition of the referenced document (including any amendments) applies.

ISO 5608, *Turning and copying tool holders and cartridges for indexable inserts — Designation*

ISO/TS 13399-2, *Cutting tool data representation and exchange — Part 2: Reference dictionary for the cutting items*

ISO/TS 13399-3, *Cutting tool data representation and exchange — Part 3: Reference dictionary for tool items*

ISO/TS 13399-4, *Cutting tool data representation and exchange — Part 4: Reference dictionary for adaptive items*

ISO/TS 13399-50, *Cutting tool data representation and exchange — Part 50: Reference dictionary for reference systems and common concepts*

ISO/TS 13399-60, *Cutting tool data representation and exchange — Part 60: Reference dictionary for connection systems*

Documents
Document Sharing Hub

© ISO 2016 – All rights reserved

Full document details: PD ISO/TS 13399-309:2016

ISO/TS 13399-80, *Cutting tool data representation and exchange — Part 80: Creation and exchange of 3D models — Overview and principles*

ISO/TS 13399-201, *Cutting tool data representation and exchange — Part 201: Creation and exchange of 3D models — Regular inserts*

3 Starting elements, coordinate systems, planes

3.1 General

Modelling of the 3D models shall be done by means of nominal dimensions.

WARNING — There is no guarantee that the 3D model, created according to the methods described in this part of ISO/TS 13399, is a true representation of the physical tool supplied by the tool manufacturer. If the models are used for simulation purposes, e.g. CAM simulation, it shall be taken into consideration that the real product dimensions can differ from those nominal dimensions.

NOTE 1 Some of the definitions are taken from ISO/TS 13399-50.

3.2 Reference system (PCS — primary coordinate system)

The reference system shall consist of the following standard elements as shown in Figure 1:

— **standard coordinate system**: right-handed rectangular Cartesian system in three dimensional space, called “primary coordinate system” (PCS)

— **3 orthogonal planes**: planes in the coordinate system that contain the axis of the system, named “xy-plane” (XYP), “xz-plane” (XZP) and “yz-plane” (YZP)

— **3 orthogonal axis**: axes built as intersections of the 3 orthogonal planes lines respectively, named “x-axis” (XA), “y-axis” (YA) and “z-axis” (ZA)

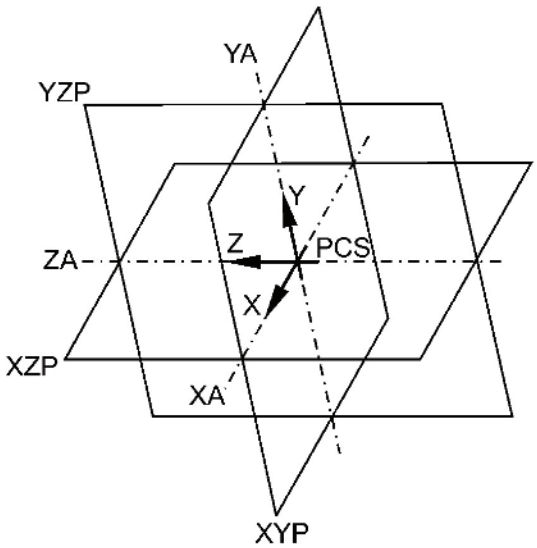

Figure 1 — Primary coordinate system

3.3 Tool item position

The definition of the tool position in 3.3.1 and 3.3.2 applies to right-handed tools. Left hand tools are as defined for right hand items but mirrored through the yz-plane.

© ISO 2016 – All rights reserved
Documents
Document Sharing Hub
Full document details: PD ISO/TS 13399-309:2016

3.3.1 Prismatic tool position

A prismatic tool position identifies the location on the coordinate reference system of a turning tool with planar sides and a rectangular cross section, as shown in Figure 2, where

— the base of the tool item shall be coplanar with the xz-plane,

— the normal for the base of the item shall be in the Y direction,

— the rear backing surface shall be coplanar with the yz-plane,

— the normal for the rear backing surface shall be in the X direction,

— the end of the item shall be coplanar with the xy-plane,

— the normal for the end of the item shall be in the Z direction,

— the rake face of the primary cutting item shall be completely visible in the X-Z quadrant, and

— for cartridges, the top of the axial adjustment screw shall be coincident with xy-plane.

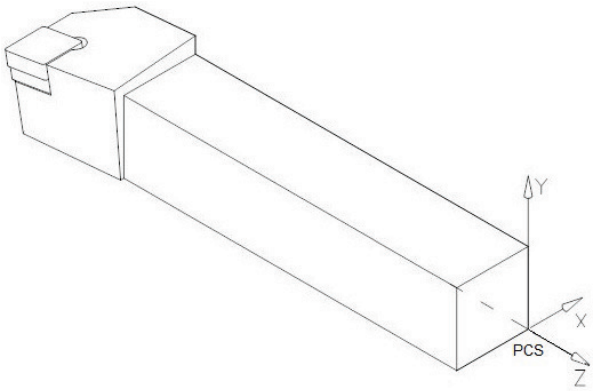

Figure 2 — Prismatic tool position

3.3.2 Round tool position

A round tool position identifies the location on the coordinate reference system of a turning tool with non-planar sided cross section, as shown in Figures 3 and 4, where

— the axis of the tool item shall be collinear with the z-axis,

— the vector of the shank that points in the Z direction shall also point towards the workpiece side,

— the drive slots or clamping flats, if present, shall be parallel with the xz-plane,

— the contact surface of the coupling, the gauge plane or the end of the cylindrical shank shall be coplanar with the xy-plane,

— the rake face of the primary cutting item shall be visible in the X-Z quadrant, and

— if a bore is present, the vector of the bore of the item that points in the Z direction shall also point towards the workpiece side.

© ISO 2016 – All rights reserved

Documents
Document Sharing Hub
Full document details: PD ISO/TS 13399-309:2016

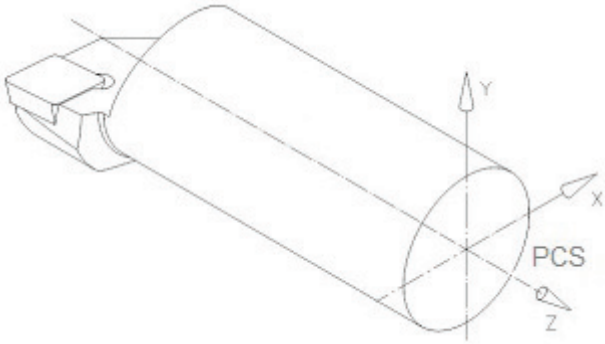

Figure 3 — Round tool position — Cylindrical shank

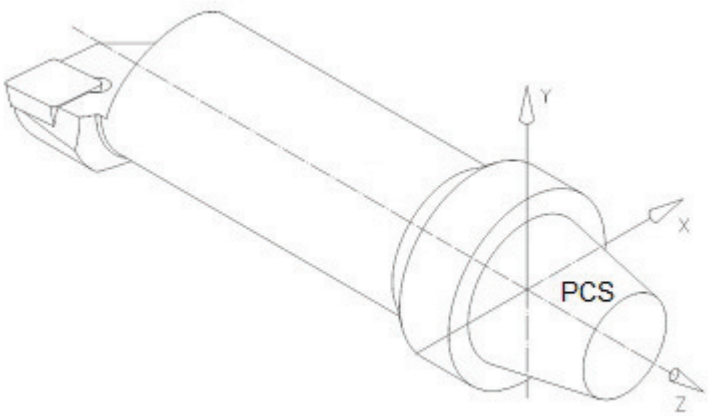

Figure 4 — Round tool position — Gauge plane or planar contact surface

3.4 Planes

The modelling shall be based on planes according to Figures 5 and 6, which shall be used as reference, if applicable. Therefore, it is assured that the model can be varied to suppress single features of independent design features by means of changing the value of one or more parameters. Furthermore, the identification of the different features shall be simplified in using the plane concept, even if they contact each other with the same size, e.g. chip flute, shank.

For the 3D visualization of turning tools for indexable inserts the general planes shall be determined as follows:

— “CDP” cutting depth plane: plane for the maximum cutting depth (CDX); based on “HEP”;

— “HEP” head end plane: plane for most front point of the tool; based on either LPR for tools with gauge line or contact surface or OAL for tools without gauge plane or contact surface;

— “HFP” functional height plane: plane for the functional height (HF); based on XZ plane of PCS;

— “LSCP” clamping length plane: plane for the clamping length (LSC); based on XY plane of PCS;

— “LFP” functional length plane: plane for the functional length (LF); based on XY plane of PCS;

— “LHP” head length plane: plane for the head length (LH); based on “HEP”;

— “TCEP tool cutting edge plane: plane perpendicular to the XY plane of a master insert through its major cutting edge;

© ISO 2016 – All rights reserved
Documents
Document Sharing Hub
Full document details: PD ISO/TS 13399-309:2016

— "TEP" tool end plane: the tool end plane is located at that end of the connection that points away from the workpiece, if the tool does not have a contact surface and/or a gauge line the TEP is coplanar with the xy-plane of the PCS. The overall length (OAL) is the distance between HEP and TEP;

— "TFP" tool feed plane: plane perpendicular to the XZ plane that is parallel to the primary feed direction of the tool and that is tangential to the cutting corner of the master insert;

— "TRP" tool rake plane: plane that contains the cutting edges of a master insert;

— "TSP" theoretical sharp point: the intersection in the tool rake plane of the two planes that are perpendicular to the XY plane of the master insert through the major and minor cutting edges of the master insert;

— "WFP" plane for the functional width (WF); based on YZ plane of PCS.

3.5 Cutting reference point (CRP)

The cutting reference point is the theoretical point of the cutting tool from which the major functional dimensions are taken.

For the calculation of this point, the following cases apply.

— Case 1: For a tool cutting edge angle less than or equal to 90°, the point is the intersection of **TCEP**, **TFP** and **TRP** (see Figures 5 and 6).

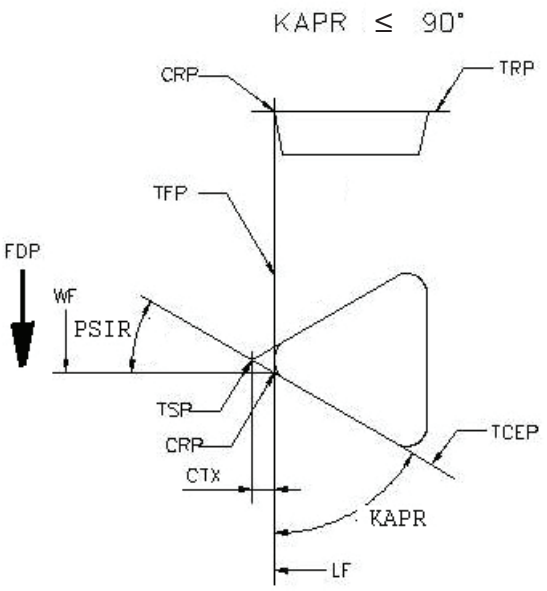

Figure 5 — Feed direction perpendicular to tool axis — KAPR ≤ 90°

© ISO 2016 – All rights reserved

Documents
Document Sharing Hub
Full document details: PD ISO/TS 13399-309:2016

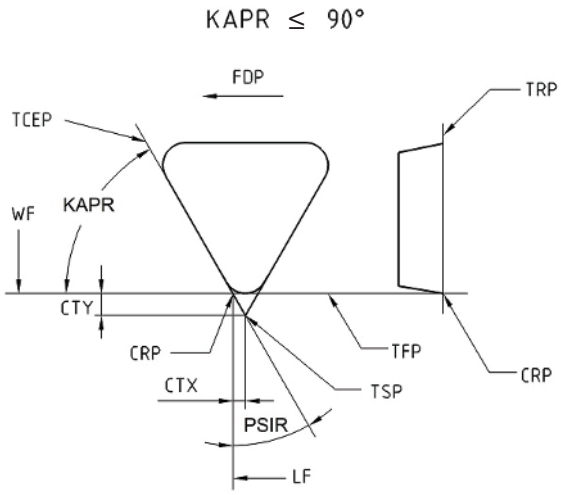

Figure 6 — Feed direction parallel to tool axis — KAPR ≤ 90°

— Case 2: For a tool cutting edge angle greater than 90°, the point is the intersection of three planes: **TFP**, a plane which both **perpendicular to the TFP** and tangential to the cutting corner, as well as the **TRP** (see Figures 7 and 8).

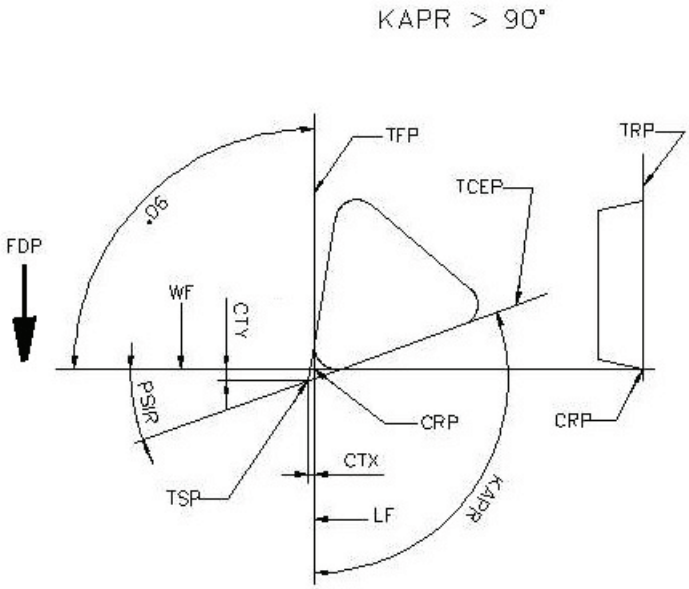

Figure 7 — Feed direction perpendicular to tool axis — KAPR > 90°

© ISO 2016 – All rights reserved
Documents
Document Sharing Hub
Full document details: PD ISO/TS 13399-309:2016

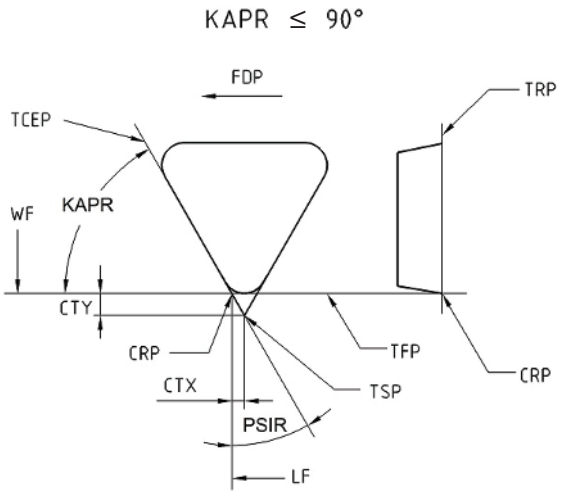

Figure 8 — Feed direction parallel to tool axis — KAPR > 90°

— Case 3: For ISO tool styles D and V (ISO 5610 series) with only axial rake, the point is the intersection of three planes: a plane **perpendicular to TFP** and tangential to the cutting corner (tangential point), a plane **parallel to TFP** through the tangential point, and **TRP** (see Figure 9).

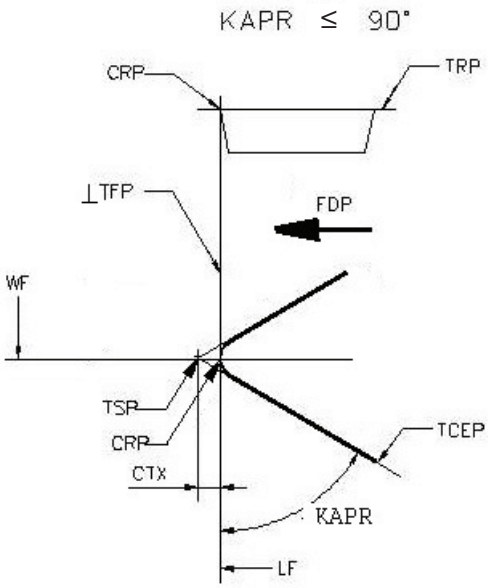

Figure 9 — CRP for neutral tools with only axial rake angle

— Case 4a: For round inserts with one feed direction parallel to the tool axis, primarily used for turning tools, the point is the intersection of three planes: a plane **perpendicular to TFP** and tangential to the cutting edge (tangential point), a plane **parallel to TFP** through the tangential point, and the **TRP** (see Figure 10).

© ISO 2016 – All rights reserved

Documents
Document Sharing Hub
Full document details: PD ISO/TS 13399-309:2016

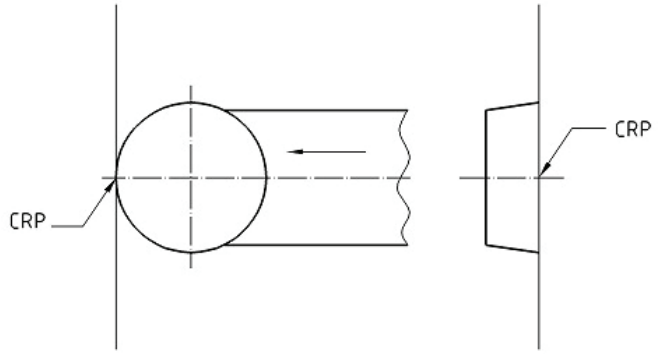

Figure 10 — CRP for round insert — TFP parallel to tool axis

— Case 4b: For round inserts with two feed directions, one parallel to the tool axis and one perpendicular to the tool axis with two **CRP's**, each point is the intersection of three planes: a plane perpendicular to its feed direction and tangential to the cutting edge (tangential point), a plane parallel to the feed direction through the tangential point, and the **TRP** (see Figure 11).

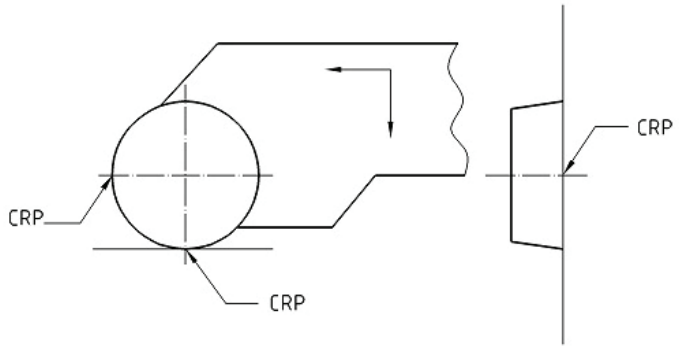

Figure 11 — Round insert with two CRPs

3.6 Design of the pocket seat

The final position of the pocket seat shall be determined by means of choosing an insert design. This feature shall be used for subtraction from the tool body. To give the possibility to use inserts with different corner radii, only that corner defining the functional dimensions shall carry the corner radius. The remaining corners shall be designed without a corner radius. The functional dimensions depend on a defined reference insert with a defined corner radius.

The size of the corner radius shall meet the determination of a master radius. Table 1 shows the size of the corner radii dependent from the inscribed circle as given in the ISO 5610 series.

Table 1 — Dependency of inscribed circle and corner radius

Dimensions in millimetre

Inscribed circle	Corner radius
3,970	0,4
4,760	0,4
5,560	0,4
6,350	0.4
9,525	0,8
12,700	0,8

© ISO 2016 – All rights reserved
Documents
Document Sharing Hub
Full document details: PD ISO/TS 13399-309:2016

Table 1 *(continued)*

Inscribed circle	Corner radius
15,875	1,2
19,050	1,2
22,250	2,4
25,400	2,4
31,750	2,4

NOTE On rectangular (style L) and parallelogram-shaped (styles A, B, K) inserts, the value of the longer side is used as the reference inscribed circle value of Table 1 which determines the size of the corner radius.

MCS-coordinate system of the insert (MCS_INSERT) and the PCS-coordinate system of the insert (PCS_INSRT) are oriented differently to the primary coordinate system of the tool (PCS_TOOL). The orientation is shown in Figure 12.

The neutral position of an insert shall be determined as follows:

— the origin of the MCS_INSERT for insets with inscribed circle is positioned at the centre of the inscribed circle;

— the origin of the MCS_INSERT for rectangular or parallelogram-shaped inserts the point of origin is determined through the intersection of the two diagonal lines between the theoretical sharp corners;

— the x-axis of MCS_INSERT shall be parallel to the x-axis of PCS_INSERT;

— the y-axis of MCS_INSERT shall be parallel to the y-axis of PCS_INSERT;

— the z-axis of MCS_INSERT shall be parallel to the z-axis of PCS_INSERT;

— the x-axis of PCS_INSERT shall be collinear to the x-axis of PCS_TOOL;

— the y-axis of PCS_INSERT shall be collinear to the z-axis of PCS_TOOL;

— the z-axis of PCS_INSERT shal be collinear to the y-axis of PCS_TOOL.

Positioning of the insert into the functional location shall be done as follows.

a) A tool design with end cutting edge angle on a right handed tool:

   1) Only those inserts shall be used that are located in the second quadrant of the primary coordinate system of the insert; also called “left handed” inserts.

   2) The insert shall be rotated by 90-KAPR degrees in mathematic positive direction (counter-clockwise) about the y-axis of PCS_TOOL.

© ISO 2016 – All rights reserved

Documents
Document Sharing Hub
Full document details: PD ISO/TS 13399-309:2016

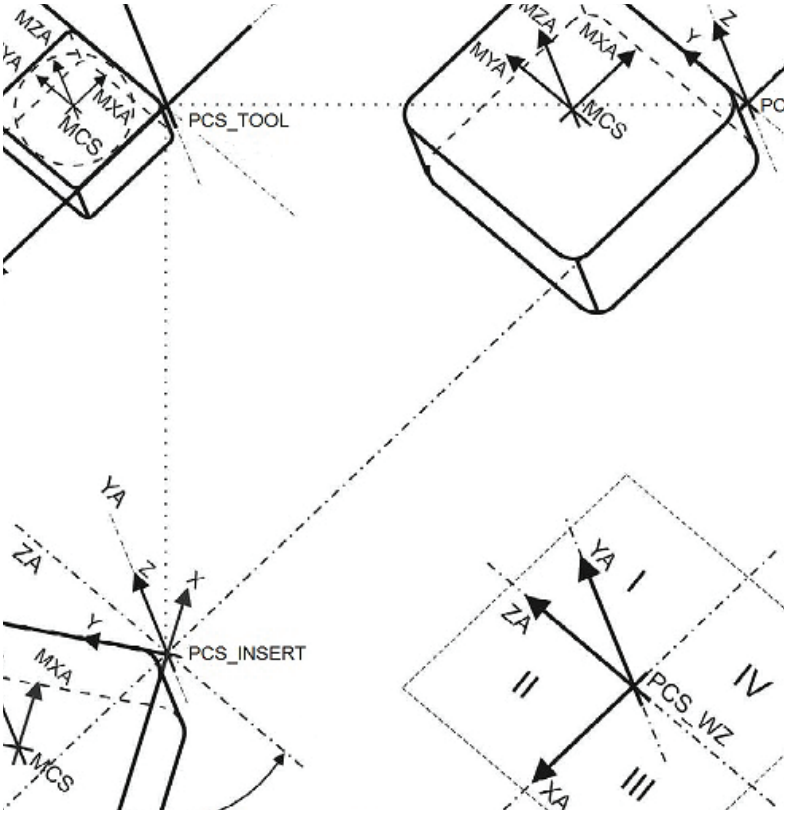

Figure 12 — Orientation of PCS_INSERT, MCS_INSERT and PCS_TOOL

3) The cutting reference point "CRP" is the point where the functional dimensions HF, LF and WF are based.

4) The coordinate system of CRP (CS_CRP) is defined as follows.

   i) The x-axis of CS_CRP is collinear to the x-axis of PCS_INSERT.

   ii) The y-axis of CS_CRP is parallel to the y-axis of PCS_INSERT.

   iii) The z-axis of CS_CRP is parallel to the z-axis of PCS_INSERT.

5) If the tool is defined by an orthogonal rake angle and an inclination angle, if either or both are not equal to 0 degree, the insert shall be rotated about its CRP. See Figure 13.

   i) To define the orthogonal rake angle (GAMO) on the tool, the pocket seat has to be rotated about the x-axis of C_CRP; if GAMO is smaller than 0° (zero degree), the rotation has to be done in the mathematical positive direction; if GAMO is greater than 0° (zero degree) the rotation has to be done in the mathematical negative direction.

   ii) To define the inclination angle (LAMS) on the tool, the pocket seat has to be rotated about the y-axis of C_CRP; if LAMS is smaller than 0° (zero degree), the rotation has to be done in the mathematical positive direction; if LAMS is greater than 0° (zero degree) the rotation has to be done in the mathematical negative direction.

© ISO 2016 – All rights reserved
Documents
Document Sharing Hub
Full document details: PD ISO/TS 13399-309:2016

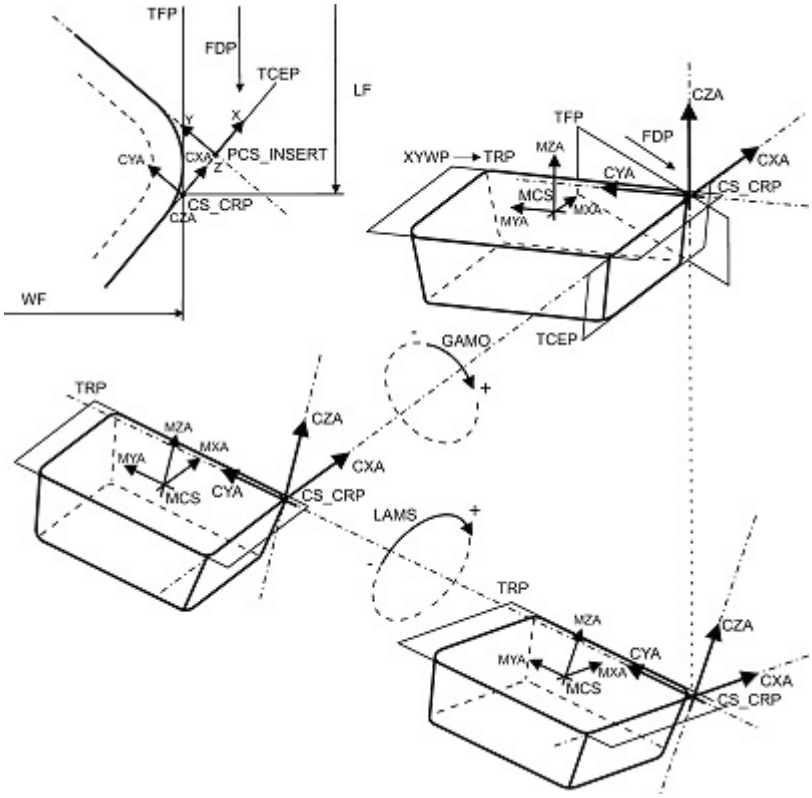

Figure 13 — Orthogonal angle and inclination angle on insert

b) A tool design with side cutting edge angle on a right handed tool:

1) only those inserts that are located in the first quadrant of the primary coordinate system of the insert shall be used – also called “right handed” or “neutral” inserts;

2) the insert shall be rotated by KAPR degrees in the mathematical positive direction (counter-clockwise) about the y-axis of PCS_TOOL;

3) the cutting reference point “CRP” is the point on which the functional dimensions are based;

4) for the definition of the coordinate system of CRP [see list item 4) of a)];

5) for theorientation of GAMO and LAMS [see list item 5) of a)].

c) A tool design with triangle lay-down threading insert.

On threading inserts, the functional dimensions HF, LF and WF are based on the theoretical sharp corner of the two sides of the triangle shape, as shown in Figure 14. This point shall be named as CRP_NC (cutting reference point for NC-programming). The origin of the CRP is located at the cutting profile in relation to the CRP_NC with its distances PDX and PDY.

© ISO 2016 – All rights reserved

Documents
Document Sharing Hub
Full document details: PD ISO/TS 13399-309:2016

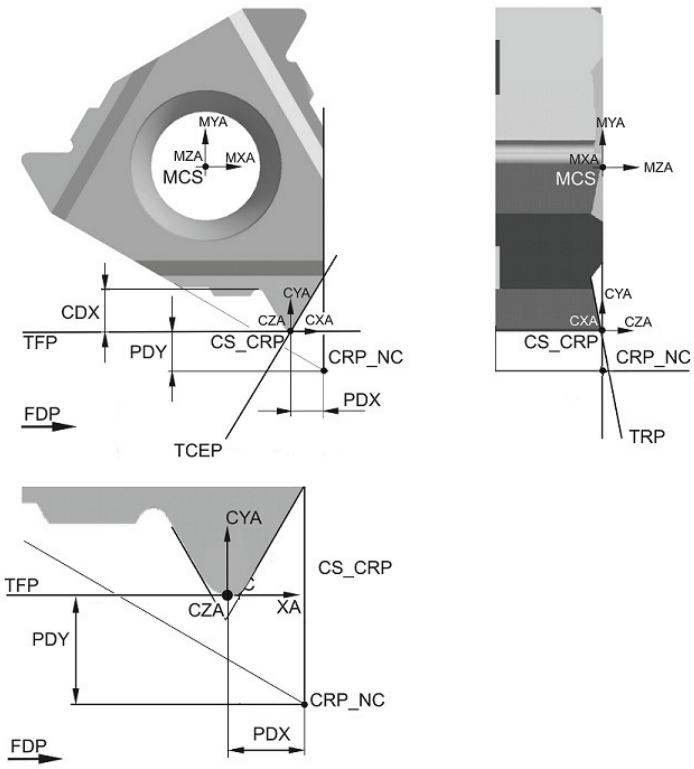

Figure 14 — Coordinatesystem CRP; cutting reference point NC

3.7 Adjustment coordinate system on workpiece side

3.7.1 General

For additional coordinate systems used for mounting components, the coordinate systems “CSWx_y” (coordinate system workpiece side) shall be defined according to ISO/TS 13399-50.

3.7.2 Designation of the coordinate system workpiece side

For the designation of the coordinate system workpiece side, the following cases apply.

— Case 1: One coordinate system at the workpiece side shall be designated as “CSW”.

— Case 2: Coordinate systems at workpiece side on different levels shall be designated as “CSWx”, e.g. “CSW1”, “CSW2”. The numbering shall start at the workpiece side and ends at the machine side in the direction of the positive z-axis.

— Case 3: Multiple coordinate systems at one level, with different angles and not at the centre of the tool axis, shall be designated with “CSWx_y”, where the “x” defines the level and the “y” defines the number of the coordinate system itself. The counting shall start at the three o’clock position counting in counter-clockwise direction while looking towards the machine spindle (positive Z-Axis).

— Case 4: Multiple coordinate systems at one level, with one angle and different diameters shall be designated as described in case 3. The counting shall start at the smallest diameter.

— Case 5: Multiple coordinate systems at one level, with different angles and different diameters shall be designated as described in case 3. The counting shall start at the workpiece side, at the smallest diameter and at the three o’clock position. The counting shall start in counter-clockwise direction while looking towards the machine spindle (positive Z-Axis) (see Figure 15).

© ISO 2016 – All rights reserved
Documents
Document Sharing Hub
Full document details: PD ISO/TS 13399-309:2016