PD ISO/TS 13399-310:2017

BSI Standards Publication

Cutting tool data representation and exchange

Part 310: Creation and exchange of 3D models — Turning tools with carbide tips

Documents
Document Sharing Hub

Full document details: PD ISO/TS 13399-310:2017

National foreword

This Published Document is the UK implementation of ISO/TS 13399-310:2017.

The UK participation in its preparation was entrusted to Technical Committee MTE/18, Tools tips and inserts for cutting applications.

A list of organizations represented on this committee can be obtained on request to its secretary.

This publication does not purport to include all the necessary provisions of a contract. Users are responsible for its correct application.

© The British Standards Institution 2017.
Published by BSI Standards Limited 2017

ISBN 978 0 580 92211 4
ICS 25.100.01; 35.240.50

Compliance with a British Standard cannot confer immunity from legal obligations.

This Published Document was published under the authority of the Standards Policy and Strategy Committee on 28 February 2017.

Amendments/corrigenda issued since publication

Date	Text affected

Documents
Document Sharing Hub

Full document details: PD ISO/TS 13399-310:2017

TECHNICAL SPECIFICATION

ISO/TS 13399-310

First edition
2017-02

Cutting tool data representation and exchange —

Part 310: Creation and exchange of 3D models — Turning tools with carbide tips

Représentation et échange des donnés relative aux outils coupants —

Partie 310: Création et échange de modèles 3D — Outils de tour à plaquettes en carbures métalliques

Reference number
ISO/TS 13399-310:2017(E)

Documents
Document Sharing Hub

© ISO 2017

Full document details: PD ISO/TS 13399-310:2017

COPYRIGHT PROTECTED DOCUMENT

© ISO 2017, Published in Switzerland

All rights reserved. Unless otherwise specified, no part of this publication may be reproduced or utilized otherwise in any form or by any means, electronic or mechanical, including photocopying, or posting on the internet or an intranet, without prior written permission. Permission can be requested from either ISO at the address below or ISO's member body in the country of the requester.

ISO copyright office
Ch. de Blandonnet 8 • CP 401
CH-1214 Vernier, Geneva, Switzerland
Tel. +41 22 749 01 11
Fax +41 22 749 09 47
copyright@iso.org
www.iso.org

© ISO 2017 – All rights reserved

Documents
Document Sharing Hub

Full document details: PD ISO/TS 13399-310:2017

Contents

Page

Foreword ..... **v**
Introduction ..... **vi**
1 Scope **1**
2 Normative references **1**
3 Terms and definitions **1**
4 Starting elements, coordinate systems, planes **2**
4.1 General 2
4.2 Reference system (PCS — primary coordinate system) 2
4.3 Tool item position 3
4.3.1 General 3
4.3.2 Prismatic tool position 3
4.3.3 Round tool position 3
4.4 Planes 4
4.5 Cutting reference point 5
4.6 Design of the pocket of the tip 6
4.6.1 General 6
4.6.2 Design of the body of the tip 6
4.7 Adjustment coordinate system on workpiece side 9
4.7.1 General 9
4.7.2 Designation of the coordinate system workpiece side 9
5 Design of the model **11**
5.1 General 11
5.2 Necessary parameters for the connection interface feature 12
6 Turning tool No. 1 — Straight design **12**
6.1 General 12
6.2 Necessary properties 12
6.3 Basic geometry 13
6.4 Turning tool No. 1 — Solid body 14
7 Turning tool No. 2 — Bent design **14**
7.1 General 14
7.2 Necessary properties 14
7.3 Basic geometry 14
7.4 Turning tool No. 2 — Solid body 15
8 Turning tool No. 3 and 6 — Offset side cutting design **15**
8.1 General 15
8.2 Necessary properties 16
8.3 Basic geometry 17
8.4 Turning tool No. 3 and 6 — Solid body 17
9 Turning tool No. 4 — Straight grooving design **17**
9.1 General 17
9.2 Necessary properties 18
9.3 Basic geometry 18
9.4 Turning tool No. 4 — solid body 19
10 Turning tool No. 5 — Offset end cutting design **19**
10.1 General 19
10.2 Necessary properties 20
10.3 Basic geometry 20
10.4 Turning tool No. 5 — Solid body 20
11 Turning tool No. 7 — Grooving and cut-off design **21**
11.1 General 21

AVA Documents
Document Sharing Hub

© ISO 2017 – All rights reserved

Full document details: PD ISO/TS 13399-310:2017

11.2 Necessary properties ... 21
11.3 Basic geometry ... 21
11.4 Turning tool No. 7 — Solid body ... 22

12 Turning tool — Pointed straight design ... 22
12.1 General ... 22
12.2 Necessary properties ... 23
12.3 Basic geometry ... 23
12.4 Turning tool — Solid body ... 23

13 Internal turning tool No. 8 — Offset end cutting design ... 24
13.1 General ... 24
13.2 Necessary properties ... 24
13.3 Basic geometry ... 25
13.4 Complete internal offset end cutting turning tool ... 25

14 Internal turning tool No. 9 — Offset side cutting design ... 26
14.1 General ... 26
14.2 Necessary properties ... 26
14.3 Basic geometry ... 27
14.4 Complete internal offset side cutting turning tool ... 27

15 Design of details ... 27
15.1 Basics for modelling ... 27
15.2 Contact surfaces/location flats — Orientation ... 27
15.3 Chamfers, rounding, others ... 27

16 Attributes of surfaces — Visualization of the model features ... 27

17 Data exchange model ... 28

Annex A (normative) **Mirror plane for left-handed tools ... 32**

Annex B (informative) **Information about nominal dimensions ... 33**

Bibliography ... 34

© ISO 2017 – All rights reserved
Documents
Document Sharing Hub
Full document details: PD ISO/TS 13399-310:2017

Foreword

ISO (the International Organization for Standardization) is a worldwide federation of national standards bodies (ISO member bodies). The work of preparing International Standards is normally carried out through ISO technical committees. Each member body interested in a subject for which a technical committee has been established has the right to be represented on that committee. International organizations, governmental and non-governmental, in liaison with ISO, also take part in the work. ISO collaborates closely with the International Electrotechnical Commission (IEC) on all matters of electrotechnical standardization.

The procedures used to develop this document and those intended for its further maintenance are described in the ISO/IEC Directives, Part 1. In particular the different approval criteria needed for the different types of ISO documents should be noted. This document was drafted in accordance with the editorial rules of the ISO/IEC Directives, Part 2 (see www.iso.org/directives).

Attention is drawn to the possibility that some of the elements of this document may be the subject of patent rights. ISO shall not be held responsible for identifying any or all such patent rights. Details of any patent rights identified during the development of the document will be in the Introduction and/or on the ISO list of patent declarations received (see www.iso.org/patents).

Any trade name used in this document is information given for the convenience of users and does not constitute an endorsement.

For an explanation on the meaning of ISO specific terms and expressions related to conformity assessment, as well as information about ISO's adherence to the World Trade Organization (WTO) principles in the Technical Barriers to Trade (TBT) see the following URL: www.iso.org/iso/foreword.html.

This document was prepared by Technical Committee ISO/TC 29, *Small tools*.

A list of all parts in the ISO 13399 series can be found on the ISO website.

© ISO 2017 – All rights reserved

Documents
Document Sharing Hub
Full document details: PD ISO/TS 13399-310:2017

Introduction

This document defines the concept, the terms and the definitions of how to design simplified 3D models of turning tools with carbide tips that can be used for NC-programming, simulation of the manufacturing processes and the determination of collision within machining processes. It is not intended to standardize the design of the cutting tool itself.

A cutting tool is used in a machine to remove material from a workpiece by a shearing action at the cutting edges of the tool. Cutting tool data that can be described by ISO 13399 include, but are not limited to, everything between the workpiece and the machine tool. Information about inserts, solid tools, assembled tools, adaptors, components and their relationships can be represented by this document. The increasing demand providing the end user with 3D models for the purposes defined above is the basis for the development of the ISO 13399 series.

The objective of the ISO 13399 series is to provide the means to represent the information that describes cutting tools in a computer-sensible form that is independent from any particular computer system. The representation will facilitate the processing and exchange of cutting tool data within and between different software systems and computer platforms and support the application of this data in manufacturing planning, cutting operations and the supply of tools. The nature of this description makes it suitable not only for neutral file exchange, but also as a basis for implementing and sharing product databases and for archiving. The methods that are used for these representations are those developed by ISO/TC 184/SC 4 for the representation of product data by using standardized information models and reference dictionaries.

Definitions and identifications of dictionary entries are defined by means of standard data that consist of instances of the EXPRESS entity data types defined in the common dictionary schema, resulting from a joint effort between ISO/TC 184/SC 4 and IEC/TC 3/SC 3D, and in its extensions defined in ISO 13584-24 and ISO 13584-25.

© ISO 2017 – All rights reserved
Documents
Document Sharing Hub
Full document details: PD ISO/TS 13399-310:2017

Cutting tool data representation and exchange —

Part 310: Creation and exchange of 3D models — Turning tools with carbide tips

1 Scope

This document specifies a concept for the design of tool items, limited to any kind of turning tools with carbide tips, together with the usage of the related properties and domains of values.

This document specifies a common way of designing simplified models that contain the following:

— definitions and identifications of the design features of turning tools with carbide tips, with a link to the properties used;

— definitions and identifications of the internal structure of the 3D model that represents features and properties of turning tools with carbide tips.

The following are outside the scope of this document:

— applications where these standard data can be stored or referenced;

— creation and exchange of simplified 3D models for cutting tools;

— creation and exchange of simplified 3D models for cutting items;

— creation and exchange of simplified 3D models for other tool items not being described in the scope of this document;

— creation and exchange of simplified 3D models for adaptive items;

— creation and exchange of simplified 3D models for assembly items and auxiliary items.

2 Normative references

The following documents are referred to in the text in such a way that some or all of their content constitutes requirements of this document. For dated references, only the edition cited applies. For undated references, the latest edition of the referenced document (including any amendments) applies.

ISO/TS 13399-50, *Cutting tool data representation and exchange — Part 50: Reference dictionary for reference systems and common concepts*

ISO/TS 13399-80, *Cutting tool data representation and exchange — Part 80: Creation and exchange of 3D models — Overview and principles*

ISO/TS 13399-201, *Cutting tool data representation and exchange — Part 201: Creation and exchange of 3D models — Regular inserts*

3 Terms and definitions

No terms and definitions are listed in this document.

© ISO 2017 – All rights reserved

Documents
Document Sharing Hub

Full document details: PD ISO/TS 13399-310:2017

ISO and IEC maintain terminological databases for use in standardization at the following addresses:

— IEC Electropedia: available at http://www.electropedia.org/

— ISO Online browsing platform: available at http://www.iso.org/obp

4 Starting elements, coordinate systems, planes

4.1 General

The creation of 3D models shall be done by means of nominal dimensions. Some examples of nominal dimensions are given in Annex B.

WARNING — There is no guarantee that the 3D model, created according to the methods described in this document, is a true representation of the physical tool supplied by the tool manufacturer. If the models are used for simulation purposes, e.g. CAM simulation, it shall be taken into consideration that the real product dimensions can differ from those nominal dimensions.

NOTE Some of the definitions have been taken from ISO/TS 13399-50.

4.2 Reference system (PCS — primary coordinate system)

The reference system consists of the following standard elements, as shown in Figure 1:

— **standard coordinate system:** right-handed rectangular Cartesian system in three-dimensional space called "primary coordinate system" (PCS);

— **three orthogonal planes:** planes in the coordinate system that contain the axis of the system, namely "XY-plane" (XYP), "XZ-plane" (XZP) and "YZ-plane" (YZP);

— **three orthogonal axis:** axes built as intersections of the three orthogonal planes lines, namely "X-axis" (XA), "Y-axis" (YA) and "Z-axis" (ZA), respectively.

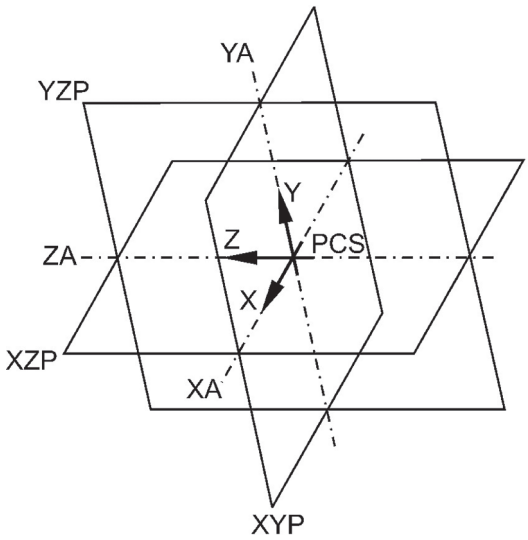

Figure 1 — Primary coordinate system

© ISO 2017 – All rights reserved
Documents
Document Sharing Hub
Full document details: PD ISO/TS 13399-310:2017

4.3 Tool item position

4.3.1 General

The definition of the tool position in 4.3.2 and 4.3.3 applies to right-handed tools. Left-hand items are as defined for right-hand items but mirrored through the YZ-plane, as specified in Annex A.

4.3.2 Prismatic tool position

A prismatic tool position identifies the location, as shown in Figure 2, on the coordinate reference system of a turning tool with planar sides and a rectangular cross-section where

— the base of the tool item shall be coplanar with the XZ-plane,

— the normal for the base of the item shall be in the negative Y direction,

— the rear backing surface shall be coplanar with the YZ-plane,

— the normal for the rear backing surface shall be in the X direction,

— the end of the item shall be coplanar with the XY-plane,

— the normal for the end of the item shall be in the Z direction,

— the rake face of the primary cutting item shall be completely visible in the negative X-Z quadrant, and

— for cartridges, the top of the axial adjustment screw shall be coincident with the XY-plane.

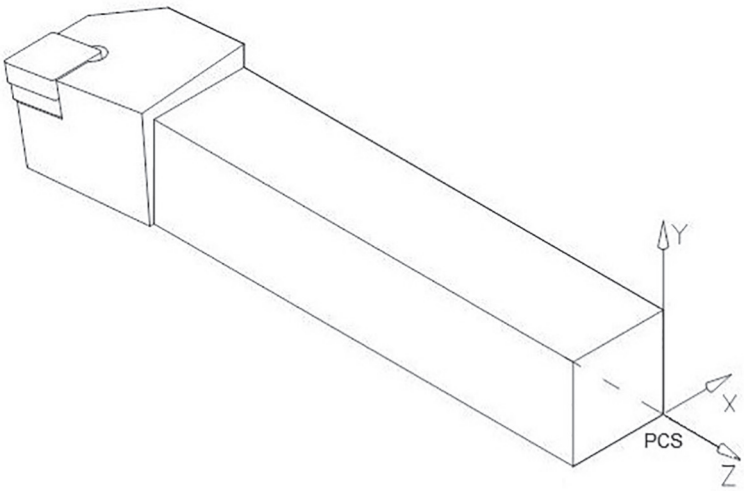

Figure 2 — Prismatic tool position

4.3.3 Round tool position

A round tool position, as shown in Figures 3 and 4, identifies the location on the coordinate reference system of a turning tool with non-planar sided cross-section where

— the axis of the tool item shall be collinear with the Z-axis,

— the vector of the shank that points in the negative Z direction shall also point towards the workpiece side,

— the drive slots or clamping flats, if present, shall be parallel with the XZ-plane,

© ISO 2017 – All rights reserved

Documents
Document Sharing Hub
Full document details: PD ISO/TS 13399-310:2017

— the contact surface of the coupling, the gauge plane or the end of the cylindrical shank shall be coplanar with the XY-plane, and

— the rake face of the primary cutting item shall be visible in the negative X-Z quadrant.

If a bore is present, the vector of the bore of the item that points in the negative Z direction shall also point towards the workpiece side.

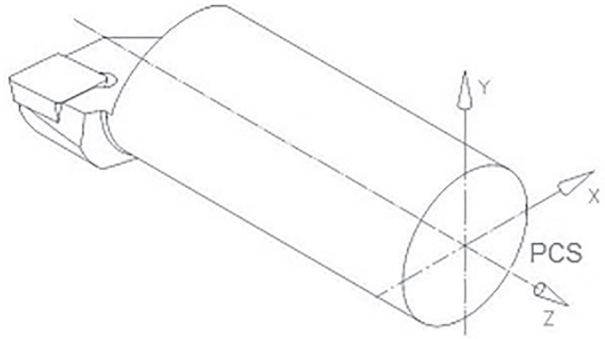

Figure 3 — Round tool position — Cylindrical shank

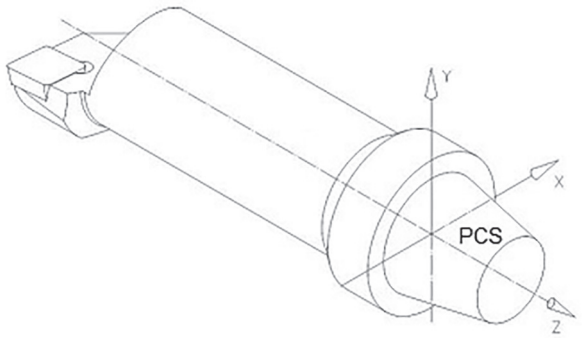

Figure 4 — Round tool position — Gauge plane or planar contact surface

4.4 Planes

The modelling shall take place based on planes according to Figure 5, which shall be used as reference, if applicable. Therefore, it is assured to be able to vary the model or to suppress single features of independent design features by means of changing the value of one or more parameters of the model design. Furthermore, the identification of the different areas shall be simplified in using the plane concept, even if they contact each other with the same size, e.g. chip flute, shank and so on.

For the 3D visualization of turning tools for indexable inserts, the general planes have to be determined as follows:

— "CDP" cutting depth plane: plane for the maximum cutting depth (CDX); based on "HEP";

— "HEP" head end plane: plane for most front point of the tool; based on either LPR for tools with gauge line or contact surface or OAL for tools without gauge plane or contact surface;

— "HFP" functional height plane: plane for the functional height (HF); based on the XZ-plane of PCS;

— "LSCP" clamping length plane: plane for the clamping length (LSC); based on the XY-plane of PCS;

© ISO 2017 – All rights reserved
Documents
Document Sharing Hub
Full document details: PD ISO/TS 13399-310:2017

— "LFP" functional length plane: plane for the functional length (LF); based on the XY-plane of PCS;

— "LHP" head length plane: plane for the head length (LH); based on "HEP";

— "TCEP" tool cutting edge plane: plane perpendicular to the XY-plane of a master insert through its major cutting edge;

— "TEP" tool end plane: the tool end plane is located at that end of the connection that points away from the workpiece — if the tool does not have a contact surface and/or a gauge line, the TEP is coplanar with the XY-plane of the PCS. The overall length (OAL) is the distance between HEP and TEP;

— "TFP" tool feed plane: plane perpendicular to the XZ-plane that is parallel to the primary feed direction of the tool and that is tangential to the cutting corner of the master insert;

— "TRP" tool rake plane: plane that contains the cutting edges of a master insert;

— "TSP" theoretical sharp point: the intersection in the tool rake plane of the two planes that are perpendicular to the XY-plane of the master insert through the major and minor cutting edges of the master insert;

— "WFP" plane for the functional width (WF); based on the YZ-plane of PCS.

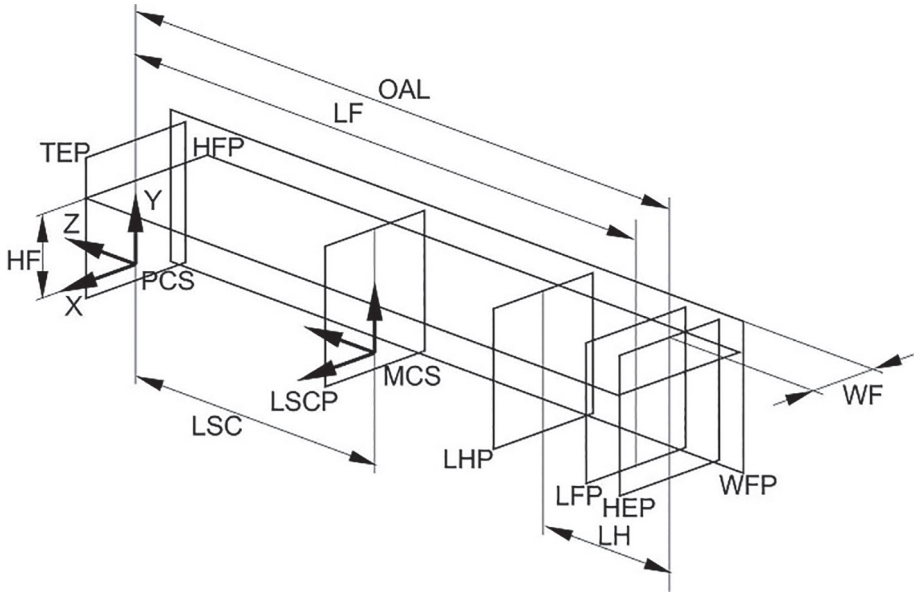

Figure 5 — Example of reference planes for design

4.5 Cutting reference point

The cutting reference point (CRP) is the theoretical point of the cutting tool from which the major functional dimensions are taken.

For turning tools with carbide tips, the CRP is the theoretical sharp point of the intersection of major cutting edge and minor cutting edge.

© ISO 2017 – All rights reserved

Documents
Document Sharing Hub
Full document details: PD ISO/TS 13399-310:2017

4.6 Design of the pocket of the tip

4.6.1 General

The final position of the pocket shall be designed by means of designing a tip. This feature shall be used for subtraction from the tool body. The design of the tip shall follow the same procedures as described in ISO/TS 13399-201. Table 1 lists the necessary properties for the tips.

Table 1 — Properties for the modelling of carbide tips

Preferred name	Preferred symbol
Clearance angle major	AN
Clearance angle minor	ANN
Insert included angle	EPSR
Insert length	INSL
Mating radius	RCON
Cutting edge length	L
Insert thickness	S
Insert width	W1
NOTE INSL = L. In the following clauses, the property cutting edge length is used to identify the length of cutting portion of the tool holder.	

4.6.2 Design of the body of the tip

The tip shall be designed as a solid without any details like rounding, chamfers and other specific features. The "PCS" defines the position of the tip in the space. The determinations are as follows:

— the tip is located in the X-Y quadrant;

— the cutting edges are collinear with the XY-plane;

— the major cutting edge is collinear with the positive X-axis;

— the theoretical sharp cutting point is on the Y-axis;

— the direction of the tip thickness is parallel to the negative Z-axis.

These determinations are valid for right-handed or neutral tips. Left-handed tips shall be mirrored through the YZ-plane.

NOTE The mounting coordinate system of the tip is identical with the PCS in position and direction of the axis.

Based on ISO 242, the five possible types of tips are shown in Figures 6 to 10.

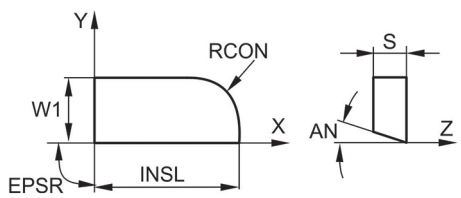

Figure 6 — Tip of type A (right-handed)

© ISO 2017 – All rights reserved
Documents
Document Sharing Hub
Full document details: PD ISO/TS 13399-310:2017