PD ISO/TS 13399-312:2016

BSI Standards Publication

Cutting tool data representation and exchange

Part 312: Creation and exchange of 3D models — Reamers for indexable inserts

bsi.

...making excellence a habit.™

Document Sharing Hub

National foreword

This Published Document is the UK implementation of ISO/TS 13399-312:2016.

The UK participation in its preparation was entrusted to Technical Committee MTE/18, Tools tips and inserts for cutting applications.

A list of organizations represented on this committee can be obtained on request to its secretary.

This publication does not purport to include all the necessary provisions of a contract. Users are responsible for its correct application.

© The British Standards Institution 2016. Published by BSI Standards Limited 2016

ISBN 978 0 580 89401 5

ICS 25.100.01; 35.240.50

Compliance with a British Standard cannot confer immunity from legal obligations.

This Published Document was published under the authority of the Standards Policy and Strategy Committee on 31 March 2016.

Amendments issued since publication

Date	Text affected

Documents
Document Sharing Hub

Full document details: PD ISO/TS 13399-312:2016

TECHNICAL SPECIFICATION

ISO/TS 13399-312

First edition
2016-02-15

Cutting tool data representation and exchange —

Part 312: Creation and exchange of 3D models — Reamers for indexable inserts

Représentation et échange des données relatives aux outils coupants —

Partie 312: Création et échange des modèles 3D — Alésoirs à plaquettes amovibles

Reference number
ISO/TS 13399-312:2016(E)

Documents
Document Sharing Hub

© ISO 2016

Full document details: PD ISO/TS 13399-312:2016

COPYRIGHT PROTECTED DOCUMENT

© ISO 2016, Published in Switzerland

All rights reserved. Unless otherwise specified, no part of this publication may be reproduced or utilized otherwise in any form or by any means, electronic or mechanical, including photocopying, or posting on the internet or an intranet, without prior written permission. Permission can be requested from either ISO at the address below or ISO's member body in the country of the requester.

ISO copyright office
Ch. de Blandonnet 8 • CP 401
CH-1214 Vernier, Geneva, Switzerland
Tel. +41 22 749 01 11
Fax +41 22 749 09 47
copyright@iso.org
www.iso.org

© ISO 2016 – All rights reserved

Documents
Document Sharing Hub

Full document details: PD ISO/TS 13399-312:2016

Contents

Page

Foreword ... **v**

Introduction ... **vii**

1 Scope ... **1**

2 Normative references ... **1**

3 Starting elements, coordinate systems, planes ... **2**
3.1 General ... 2
3.2 Reference system ... 2
3.3 Primary coordinate system and mounting coordinate system ... 2
3.4 Coordinate system at the cutting part ... 3
3.5 Planes ... 3
3.6 Design of the pocket seat and cutting reference point (CRP) of the insert ... 4
3.7 Adjustment coordinate system on workpiece side ... 6
3.7.1 General ... 6
3.7.2 Designation of the coordinate system workpiece side ... 6

4 Design of the model ... **7**
4.1 General ... 7
4.2 Necessary parameters for the connection interface feature ... 8
4.3 Necessary properties for inserts ... 8
4.3.1 General ... 8
4.3.2 Properties of inserts for reaming operations ... 9
4.3.3 Design of the pocket seat feature ... 9

5 Cylindrical reamer ... **9**
5.1 General ... 9
5.2 Necessary properties ... 10
5.3 Basic geometry ... 11
5.4 Determination of the position of the mounting coordinate system of insert ... 11
5.5 Chip flute and pocket seat ... 12
5.6 Cylindrical reamer — Assembly ... 13

6 Tapered reamer ... **14**
6.1 General ... 14
6.2 Necessary properties ... 14
6.3 Basic geometry ... 15
6.4 Determination of the position of the mounting coordinate system of insert ... 15
6.5 Chip flute and pocket seat ... 16
6.6 Tapered reamer, assembled ... 17

7 Stepped (profile) reamer ... **17**
7.1 General ... 17
7.2 Necessary properties ... 18
7.3 Basic geometry ... 19
7.4 Determination of the position of the mounting coordinate system of insert ... 20
7.5 Chip flute and pocket seat ... 21
7.6 Assembled stepped (profile) reamer ... 23

8 Bell style reamer ... **23**
8.1 General ... 23
8.2 Necessary properties ... 24
8.3 Basic geometry ... 25
8.4 Determination of the position of the mounting coordinate system of insert ... 26
8.5 Chip flute and pocket seats ... 28
8.6 Assembled bell style reamer ... 29

9 Shell reamer ... **29**
9.1 General ... 29

AVA Documents
Document Sharing Hub

© ISO 2016 – All rights reserved

Full document details: PD ISO/TS 13399-312:2016

9.2 Necessary properties ... 30
9.3 Basic geometry ... 30
9.4 Determination of the position of the mounting coordinate system of insert ... 31
9.5 Chip flute and pocket seats ... 32
9.6 Assembled shell reamer ... 33

10 Design of details ... 34
10.1 Basics for modelling ... 34
10.2 Contact/clamping surfaces — Orientation ... 34
10.3 Chamfers and roundings ... 35

11 Attributes of surfaces — Visualization of the model features ... 35

12 Structure of the design elements (tree of model) ... 35

13 Data exchange model ... 36

Annex A (informative) **Information about nominal dimensions ... 38**

Bibliography ... 39

© ISO 2016 – All rights reserved

Documents
Document Sharing Hub
Full document details: PD ISO/TS 13399-312:2016

Foreword

ISO (the International Organization for Standardization) is a worldwide federation of national standards bodies (ISO member bodies). The work of preparing International Standards is normally carried out through ISO technical committees. Each member body interested in a subject for which a technical committee has been established has the right to be represented on that committee. International organizations, governmental and non-governmental, in liaison with ISO, also take part in the work. ISO collaborates closely with the International Electrotechnical Commission (IEC) on all matters of electrotechnical standardization.

The procedures used to develop this document and those intended for its further maintenance are described in the ISO/IEC Directives, Part 1. In particular the different approval criteria needed for the different types of ISO documents should be noted. This document was drafted in accordance with the editorial rules of the ISO/IEC Directives, Part 2 (see www.iso.org/directives).

Attention is drawn to the possibility that some of the elements of this document may be the subject of patent rights. ISO shall not be held responsible for identifying any or all such patent rights. Details of any patent rights identified during the development of the document will be in the Introduction and/or on the ISO list of patent declarations received (see www.iso.org/patents).

Any trade name used in this document is information given for the convenience of users and does not constitute an endorsement.

For an explanation on the meaning of ISO specific terms and expressions related to conformity assessment, as well as information about ISO's adherence to the WTO principles in the Technical Barriers to Trade (TBT) see the following URL: Foreword - Supplementary information

The committee responsible for this document is ISO/TC 29, *Small tools*.

ISO/TS 13399 consists of the following parts, under the general title *Cutting tool data representation and exchange*:

— *Part 1: Overview, fundamental principles and general information model*

— *Part 2: Reference dictionary for the cutting items* [Technical Specification]

— *Part 3: Reference dictionary for tool items* [Technical Specification]

— *Part 4: Reference dictionary for adaptive items* [Technical Specification]

— *Part 5: Reference dictionary for assembly items* [Technical Specification]

— *Part 50: Reference dictionary for reference systems and common concepts* [Technical Specification]

— *Part 60: Reference dictionary for connection systems* [Technical Specification]

— *Part 80: Creation and exchange of 3D models — Overview and principles* [Technical Specification]

— *Part 100: Definitions, principles and methods for reference dictionaries* [Technical Specification]

— *Part 150: Usage guidelines* [Technical Specification]

— *Part 201: Creation and exchange of 3D models — Regular inserts* [Technical Specification]

— *Part 202: Creation and exchange of 3D models — Irregular inserts* [Technical Specification]

— *Part 203: Creation and exchange of 3D models — Replaceable inserts for drilling* [Technical Specification]

— *Part 204: Creation and exchange of 3D models — Inserts for reaming* [Technical Specification]

— *Part 301: Concept for the design of 3D models based on properties according to ISO/TS 13399-3: Modelling of thread-cutting taps, thread-forming taps and thread-cutting dies* [Technical Specification]

AVA Documents
Document Sharing Hub

© ISO 2016 – All rights reserved

Full document details: PD ISO/TS 13399-312:2016

— *Part 302: Concept for the design of 3D models based on properties according to ISO/TS 13399-3: Modelling of solid drills and countersinking tools* [Technical Specification]

— *Part 303: Concept for the design of 3D models based on properties according to ISO/TS 13399-3: Modelling of end mills with solid cutting edges* [Technical Specification]

— *Part 304: Concept for the design of 3D models based on properties according to ISO/TS 13399-3: Modelling of milling cutters with arbor hole and solid cutting edges* [Technical Specification]

— *Part 307: Creation and exchange of 3D models — End mills for indexable inserts* [Technical Specification]

— *Part 308: Creation and exchange of 3D models — Milling cutters with arbor hole for indexable inserts* [Technical Specification]

— *Part 309: Creation and exchange of 3D models — Tool holders for indexable inserts* [Technical Specification]

— *Part 311: Creation and exchange of 3D models — Solid reamers* [Technical Specification]

— *Part 312: Creation and exchange of 3D models — Reamers for indexable inserts* [Technical Specification]

— *Part 401: Creation and exchange of 3D models — Converting, extending and reducing adaptive items* [Technical Specification]

— *Part 405: Creation and exchange of 3D models — Collets* [Technical Specification]

The following parts are under preparation:

— *Part 70: Graphical data layout — Layer settings for tool designs* [Technical Specification]

— *Part 71: Graphical data layout — Creation of documents for the standardized data exchange — Graphical product information* [Technical Specification]

— *Part 72: Creation of documents for the standardized data exchange — Definition of properties for drawing header and their XML-data exchange* [Technical Specification]

— *Part 305: Creation and exchange of 3D models — Modular tooling systems with adjustable cartridges for boring* [Technical Specification]

— *Part 310: Creation and exchange of 3D models — Turning tools with carbide tips* [Technical Specification]

© ISO 2016 – All rights reserved
Documents
Document Sharing Hub
Full document details: PD ISO/TS 13399-312:2016

Introduction

This part of ISO/TS 13399 defines the concept, the terms and the definitions on how to design simplified 3D models of reamers for indexable cutting edges that can be used for NC-programming, simulation of the manufacturing processes and the determination of collision within machining processes. It is not intended to standardize the design of the cutting tool itself.

A cutting tool is used in a machine to remove material from a workpiece by a shearing action at the cutting edges of the tool. Cutting tool data that can be described by ISO/TS 13399 (all parts) include, but are not limited to, everything between the workpiece and the machine tool. Information about inserts, solid tools, assembled tools, adaptors, components and their relationships can be represented by ISO/TS 13399 (all parts). The increasing demand providing the end-user with 3D models for the purposes defined above is the basis for the development of this series of International Standards.

The objective of ISO/TS 13399 (all parts) is to provide the means to represent the information that describes cutting tools in a computer sensible form that is independent from any particular computer system. The representation will facilitate the processing and exchange of cutting tool data within and between different software systems and computer platforms and support the application of this data in manufacturing planning, cutting operations and the supply of tools. The nature of this description makes it suitable not only for neutral file exchange, but also as a basis for implementing and sharing product databases and for archiving. The methods that are used for these representations are those developed by ISO/TC 184 for the representation of product data by using standardized information models and reference dictionaries.

Definitions and identifications of dictionary entries are defined by means of standard data that consist of instances of the EXPRESS entity data types defined in the common dictionary schema, resulting from a joint effort between ISO/TC 184/SC 4 and IEC/TC 3/SC 3D and in its extensions defined in ISO 13584-24 and ISO 13584-25.

© ISO 2016 – All rights reserved

Documents
Document Sharing Hub
Full document details: PD ISO/TS 13399-312:2016

Documents
Document Sharing Hub

Full document details: PD ISO/TS 13399-312:2016

Cutting tool data representation and exchange —

Part 312: Creation and exchange of 3D models — Reamers for indexable inserts

1 Scope

This part of ISO/TS 13399 specifies a concept for the design of tool items, limited to any kind of reamers for indexable cutting edges, together with the usage of the related properties and domains of values.

This part of ISO/TS 13399 specifies a common way of design simplified models that contain the following:

— definitions and identifications of the design features of reamers for indexable cutting edges, with an association to the used properties;

— definitions and identifications of the internal structure of the 3D model that represent the features and the properties of reamers for indexable cutting edges.

The following are outside the scope of this part of ISO/TS 13399:

— applications where these standard data may be stored or referenced;

— concept of 3D models for cutting tools;

— concept of 3D models for cutting items;

— concept of 3D models for other tool items not being described in the scope of this part of ISO/TS 13399;

— concept of 3D models for adaptive items;

— concept of 3D models for assembly items and auxiliary items.

2 Normative references

The following documents, in whole or in part, are normatively referenced in this document and are indispensable for its application. For dated references, only the edition cited applies. For undated references, the latest edition of the referenced document (including any amendments) applies.

ISO/TS 13399-3, *Cutting tool data representation and exchange — Part 3: Reference dictionary for tool items*

ISO/TS 13399-4, *Cutting tool data representation and exchange — Part 4: Reference dictionary for adaptive items*

ISO/TS 13399-50:2013, *Cutting tool data representation and exchange — Part 50: Reference dictionary for reference systems and common concepts*

ISO/TS 13399-60, *Cutting tool data representation and exchange — Part 60: Reference dictionary for connection systems*

ISO/TS 13399-80, *Cutting tool data representation and exchange — Part 80: Creation and exchange of 3D models — Overview and principles*

ISO/TS 13399-204, *Cutting tool data representation and exchange — Part 204: Creation and exchange of 3D models — Inserts for reaming*

© ISO 2016 – All rights reserved

Documents
Document Sharing Hub

Full document details: PD ISO/TS 13399-312:2016

3 Starting elements, coordinate systems, planes

3.1 General

The modelling of the 3D models shall be done by means of nominal dimensions.

WARNING — There is no guarantee that the 3D model, created according to the methods described in this part of ISO/TS 13399, is a true representation of the physical tool supplied by the tool manufacturer. If the models are used for simulation purposes, for example, CAM simulation, it shall be taken into consideration that the real product dimensions can differ from those nominal dimensions.

NOTE Some definitions are taken from ISO/TS 13399-50.

3.2 Reference system

The reference system, as shown in Figure 1, consists of the following standard elements:

— **standard coordinate system:** right-handed rectangular Cartesian system in three-dimensional space, called “primary coordinate system” (PCS);

— **3 orthogonal planes:** planes in the coordinate system that contain the axis of the system, named “xy-plane” (XYP), “xz-plane” (XZP) and “yz-plane” (YZP);

— **3 orthogonal axis:** axes built as intersections of the three orthogonal planes lines respectively, named “x-axis” (XA), “y-axis” (YA) and “z-axis” (ZA).

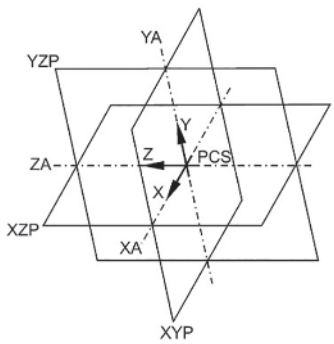

Figure 1 — Reference system

3.3 Primary coordinate system and mounting coordinate system

The location of the primary coordinate system (PCS) within the 3D model shall be defined unambiguously. The position of the PCS is given for all connection interfaces in accordance with ISO/TS 13399-50:2013, 5.2 and Figures F.4 to F.9. Subsequently, the PCS is located at the gage line, if connection interfaces with defined gage line are used, e.g. hollow taper shank, hollow polygonal taper or taper with ball track system. At shanks without defined gage line, the PCS is positioned at the end of the shank.

For virtually mounting of reamers onto an adaptive item, an additional reference system shall be defined. This reference system is called “mounting coordinate system” (MCS). It is located at the starting point of the protruding length of a tool item. The orientation is shown in Figure 2.

© ISO 2016 – All rights reserved
Documents
Document Sharing Hub
Full document details: PD ISO/TS 13399-312:2016

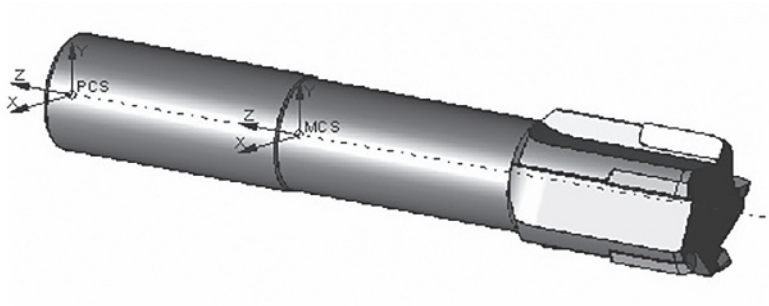

Figure 2 — Orientation of "PCS" and "MCS" reference system (example)

3.4 Coordinate system at the cutting part

The coordinate system at the cutting part shown in Figure 3, e.g. the planar front face, named "coordinate system in process" (CIP), with a defined distance to the PCS shall be oriented as follows:

— z-axis of CIP points to the PCS;

— z-axis of CIP is collinear to the z-axis of PCS;

— y-axis of CIP is parallel to the y-axis of PCS.

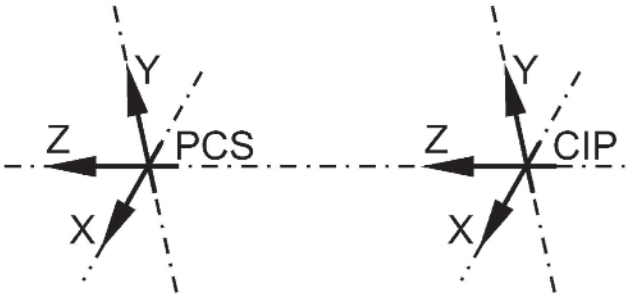

Figure 3 — Orientation of CIP

If the 3D modelling software gives the possibility to include interfaces for components, e.g. to mount a face cutting part onto a complete cutting tool, it shall be advised to use the coordinate system "CIP".

If necessary, another designation shall be given to the interface of the component (dependent on the software). The name is "CSIF" (for "coordinate system interface") and includes the coordinate system "CIP".

3.5 Planes

The modelling shall take place based on planes according to Figure 4 and it shall be used as reference, if applicable. Therefore, the model shall be able to vary or single features of independent design features shall be deleted by means of changing the value of one or more parameter of the model design. Furthermore, the identification of the different areas shall be simplified in using the plane concept, even if they contact each other with the same size, e.g. chip flute, shank.

For the 3D visualization of reamers with non-indexable cutting edges, the planes shall be determined as follows:

— "TEP" plane located at the end of the interface on the machine side with reference to "CIP"; the distance between "CIP" and "TEP" is the property "OAL" (overall length);

© ISO 2016 – All rights reserved

Documents
Document Sharing Hub
Full document details: PD ISO/TS 13399-312:2016

— "LPRP" plane for the protruding length (LPR), based on "CIP";

— "LSP" plane for the shank length (LS), based on "TEP";

— "LUP" plane for the usable length (LU), based on "CIP";

— "SDP_n" plane for the step distance (SD), based on "CIP". This plane shall be indexed by means of number of steps;

— "SDLP_1" plane for the step diameter length (SDL), based on each starting point of the individual step. The first step diameter length is based on the plug;

— "PLGLP" plane for the plug length (PLGL), based on "CIP";

— "HEP" plane located at the front of the tool and is coplanar with the XY-plane of "CIP".

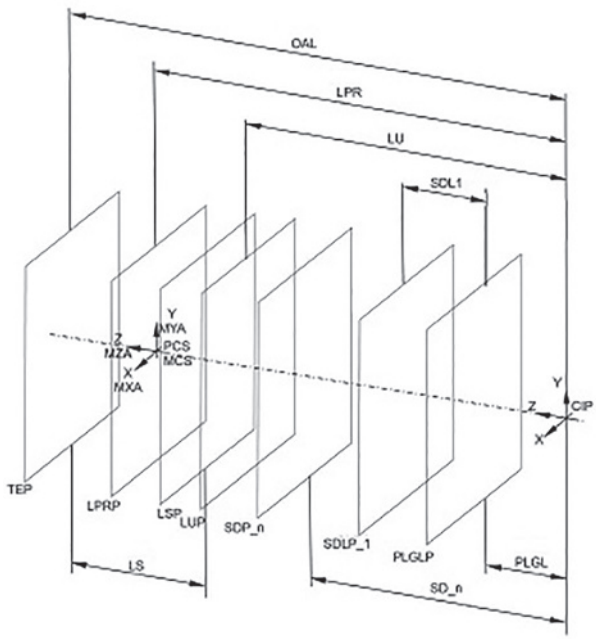

Figure 4 — Planes for design

3.6 Design of the pocket seat and cutting reference point (CRP) of the insert

If inserts for reaming have a specific design and are not interchangeable between vendors, the location of the MCS shall be upon the manufacturer's discretion, either on the top face or on the bottom face. The orientation of the axis shall follow the definitions in this part of ISO/TS 13399.

The final position of the pocket seat shall be designed by means of designing an insert. This feature shall be used for subtraction from the tool body. To give the possibility to use inserts with different corner configurations, only that corner defining the functional dimensions shall carry the corner configuration. The remaining corners shall be designed without a corner configuration.

MCS-coordinate system of the insert (MCS_INS) and the PCS-coordinate system of the insert (PCS_INS) are oriented differently to the primary coordinate system of the tool (PCS_TOOL). The orientation is shown in Figure 5.

The neutral position of an insert is determined as follows:

— the origin of the MCS_INS and the origin of the PCS_INS are identical;

— the x-axis of PCS_INSERT shall be collinear to the x-axis of PCS_TOOL;

© ISO 2016 – All rights reserved
Documents
Document Sharing Hub
Full document details: PD ISO/TS 13399-312:2016

— the y-axis of PCS_INSERT shall be collinear to the z-axis of PCS_TOOL;

— the z-axis of PCS_INSERT shall be collinear to the y-axis of PCS_TOOL.

Positioning of the insert into the functional location shall be done as follows.

a) Design with side cutting edge angle on a right handed tool, commonly used on the periphery of the reamer, typically for all kind of side cutting end mills.

   1) Only those inserts shall be used that are located in the first quadrant of the primary coordinate system of the insert, also called “right handed” or “neutral” inserts.

   2) The insert shall be rotated by KAPR degrees in mathematic positive direction (counter-clockwise) about the y-axis of PCS_TOOL.

   3) The cutting reference point “CRP” is the point where the functional dimensions are based. The definition of the CRP is given in ISO/TS 13399-50.

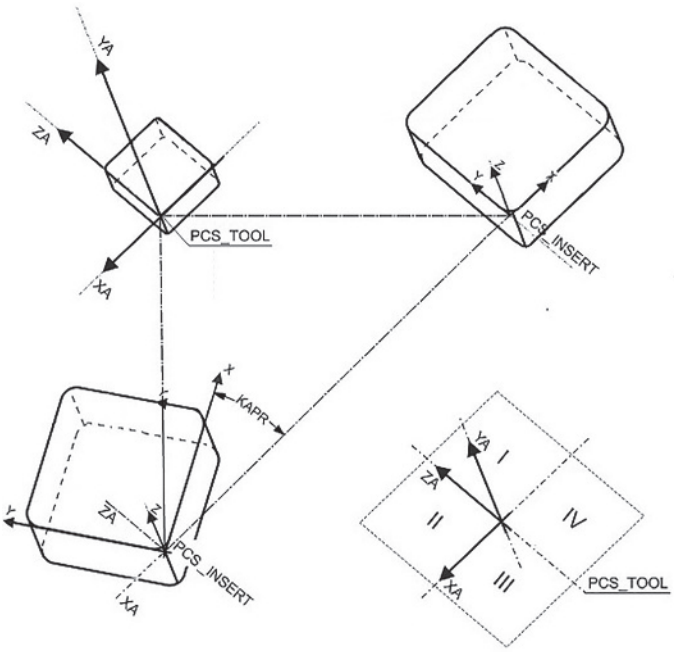

Figure 5 — Orientation of PCS_INSERT, MCS_INSERT and PCS_TOOL on side cutting edge angle

b) If the tool is defined with an axial rake and a radial rake angle that are unequal 0 degree, the insert shall be rotated about its CRP as shown in Figure 6. Therefore, two axis shall be added.

   1) GAMP-axis positioned on CRP with its vector parallel to x-axis of PCS_TOOL defines the rotation of axial rake angle.

   2) GAMF-axis positioned on CRP with its vector parallel to z-axis of PCS_TOOL defines the rotation of radial rake angle.

   3) The position of the C_CRP is defined with the properties DC/2 and LF.

© ISO 2016 – All rights reserved

Documents
Document Sharing Hub
Full document details: PD ISO/TS 13399-312:2016

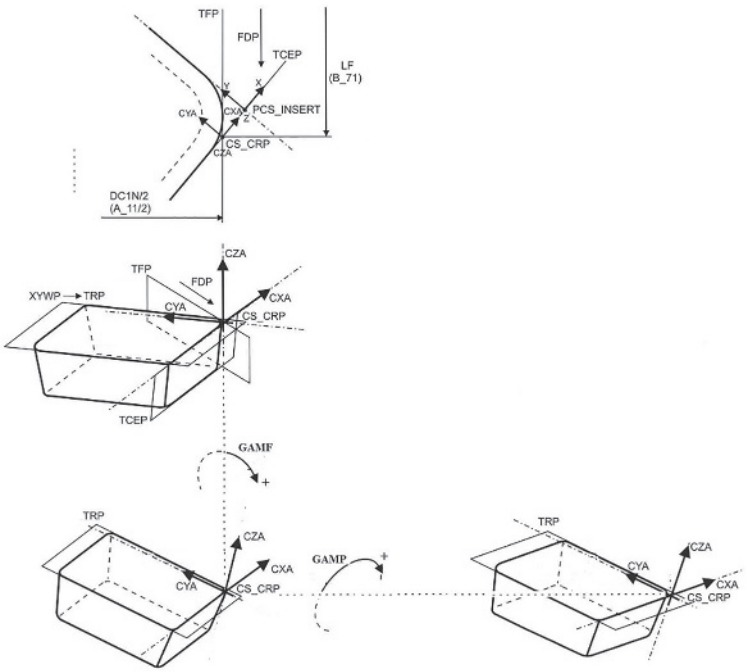

Figure 6 — Axial and radial rake angle on insert

3.7 Adjustment coordinate system on workpiece side

3.7.1 General

Additional coordinate systems for mounting components “CSWx_y” (coordinate system workpiece side) shall be defined according to ISO/TS 13399-50.

3.7.2 Designation of the coordinate system workpiece side

Case 1 One coordinate system at the workpiece side shall be designated as “CSW”.

Case 2 One coordinate system at workpiece side on different levels shall be designated as “CSWx”, e.g. “CSW1”, “CSW2”. The numbering starts at the workpiece side and ends at the machine side in the direction of the positive z-axis.

Case 3 Multiple coordinate systems at one level, but different angles and not at the centre of the tool axis, shall be designated with “CSWx_y”, where the “x” defines the level and the “y” defines the number of the coordinate system itself. The counting starts at the three o’clock position counting in counter-clockwise direction while looking towards the machine spindle (positive z-axis).

Case 4 Multiple coordinate systems at one level, one angle and different diameters shall be designated as described in Case 3. The counting shall start at the smallest diameter.

Case 5 Multiple coordinate systems at one level, different angles and different diameters shall be designated as described in Case 3. The counting shall start at the smallest diameter and at the three o’clock position counting in counter-clockwise direction while looking towards the machine spindle (positive z-axis).

Figure 7 shows an example of the arrangement of the CSWs.

© ISO 2016 – All rights reserved
Documents
Document Sharing Hub
Full document details: PD ISO/TS 13399-312:2016