PD ISO/TS 16785:2014

BSI Standards Publication

Electronic Fee Collection (EFC) — Interface definition between DSRC-OBE and external in-vehicle devices

bsi.

...making excellence a habit.™

Document Sharing Hub

Full document details: PD ISO/TS 16785:2014

National foreword

This Published Document is the UK implementation of ISO/TS 16785:2014.

The UK participation in its preparation was entrusted to Technical Committee EPL/278, Intelligent transport systems.

A list of organizations represented on this committee can be obtained on request to its secretary.

This publication does not purport to include all the necessary provisions of a contract. Users are responsible for its correct application.

© The British Standards Institution 2014. Published by BSI Standards Limited 2014

ISBN 978 0 580 85575 7

ICS 03.220.01; 35.240.60

Compliance with a British Standard cannot confer immunity from legal obligations.

This Published Document was published under the authority of the Standards Policy and Strategy Committee on 30 November 2014.

Amendments issued since publication

Date	Text affected

Documents
Document Sharing Hub

Full document details: PD ISO/TS 16785:2014

TECHNICAL SPECIFICATION

ISO/TS 16785

First edition
2014-11-01

Electronic Fee Collection (EFC) — Interface definition between DSRC-OBE and external in-vehicle devices

Perception du télépéage — Définition de l'interface entre l'équipement à bord à communications dédiées à courte portée (DSRC-OBE) et les dispostifs externes embarqués

Reference number
ISO/TS 16785:2014(E)

Documents
Document Sharing Hub

© ISO 2014

Full document details: PD ISO/TS 16785:2014

COPYRIGHT PROTECTED DOCUMENT

© ISO 2014

All rights reserved. Unless otherwise specified, no part of this publication may be reproduced or utilized otherwise in any form or by any means, electronic or mechanical, including photocopying, or posting on the internet or an intranet, without prior written permission. Permission can be requested from either ISO at the address below or ISO's member body in the country of the requester.

ISO copyright office
Case postale 56 • CH-1211 Geneva 20
Tel. + 41 22 749 01 11
Fax + 41 22 749 09 47
E-mail copyright@iso.org
Web www.iso.org

Published in Switzerland

© ISO 2014 – All rights reserved

Documents
Document Sharing Hub

Full document details: PD ISO/TS 16785:2014

Contents

Page

Foreword ..... **iv**
Introduction ..... **v**
1 Scope **1**
2 Normative references **2**
3 Terms and definitions **3**
4 Symbols and abbreviated terms **4**
5 Tolling models with external in-vehicle devices **5**
5.1 General 5
5.2 Applicable tolling services 6
5.3 Basic DSRC tolling 6
5.4 Mobile-assisted DSRC tolling 7
5.5 Universal tolling 8
6 Message sets **10**
6.1 General 10
6.2 Payment means status 12
6.3 Payment fee 12
6.4 Account update 13
6.5 Compliance checking data (CCCAttributes) 13
6.6 Localization data (LacData) 13
7 Security aspects **13**
7.1 General 13
7.2 OBE interface profile 14
Annex A (normative) **Data type specification** **15**
Annex B (normative) **Protocol Implementation Conformance Statement proforma** **17**
Annex C (informative) **Mobile-assisted DSRC tolling in Korea** **19**
Annex D (informative) **Other possible tolling models** **22**
Annex E (informative) **Applicable ITS services** **25**
Bibliography **30**

© ISO 2014 – All rights reserved

Documents
Document Sharing Hub
Full document details: PD ISO/TS 16785:2014

Foreword

ISO (the International Organization for Standardization) is a worldwide federation of national standards bodies (ISO member bodies). The work of preparing International Standards is normally carried out through ISO technical committees. Each member body interested in a subject for which a technical committee has been established has the right to be represented on that committee. International organizations, governmental and non-governmental, in liaison with ISO, also take part in the work. ISO collaborates closely with the International Electrotechnical Commission (IEC) on all matters of electrotechnical standardization.

The procedures used to develop this document and those intended for its further maintenance are described in the ISO/IEC Directives, Part 1. In particular the different approval criteria needed for the different types of ISO documents should be noted. This document was drafted in accordance with the editorial rules of the ISO/IEC Directives, Part 2 (see www.iso.org/directives).

Attention is drawn to the possibility that some of the elements of this document may be the subject of patent rights. ISO shall not be held responsible for identifying any or all such patent rights. Details of any patent rights identified during the development of the document will be in the Introduction and/or on the ISO list of patent declarations received (see www.iso.org/patents).

Any trade name used in this document is information given for the convenience of users and does not constitute an endorsement.

For an explanation on the meaning of ISO specific terms and expressions related to conformity assessment, as well as information about ISO's adherence to the WTO principles in the Technical Barriers to Trade (TBT) see the following URL: Foreword - Supplementary information

The committee responsible for this document is ISO/TC 204, *Intelligent transport systems*.

© ISO 2014 – All rights reserved
Documents
Document Sharing Hub
Full document details: PD ISO/TS 16785:2014

Introduction

Background and motivation

With regards to reassessing the present fuel tax schemes to cope with prevailing plug-in hybrid vehicle and electric vehicle or introducing congestion charging system to urban roads or inter-urban roads etc., the needs for expanding toll roads are becoming worthy of notice in the world.

In countries where Dedicated Short-Range Communication (DSRC)-based Electronic Fee Collection (EFC) systems were introduced for toll roads and have been operated widely, making their EFC equipment applicable to present non-toll roads, such as urban roads or inter-urban roads, becomes a significant issue to be considered and solved.

There are three cases of introducing EFC to cope with those situations:

— Case-1: DSRC-based EFC should be introduced to new toll roads, as well as present toll roads.

— Case-2: Autonomous EFC should be introduced to new toll roads and present toll roads as replacing.

— Case-3: DSRC-based EFC should be operated for present toll roads as they are, and autonomous EFC should be introduced to new toll roads.

In case of both Case-1 and Case-2, necessary interface definitions and test procedures are already covered by existing EFC standards. However, in Case-3, as shown in Figure 1, current On-Board Equipment (OBE) used for DSRC-based EFC should be considered to be used for autonomous EFC covering new toll roads in keeping consistency with present toll roads.

DSRC-OBE should be expanded functionally by cooperating with external in-vehicle devices composed of a Global Navigation Satellite Systems (GNSS) module and/or a cellular module and/or other related modules; therefore, DSRC-OBE is possible to be reused for new EFC environment consisting of DSRC-based EFC and autonomous systems.

Consequently, an application interface definition between DSRC-OBE and external in-vehicle devices is essential and should be standardized.

© ISO 2014 – All rights reserved

Documents
Document Sharing Hub
Full document details: PD ISO/TS 16785:2014

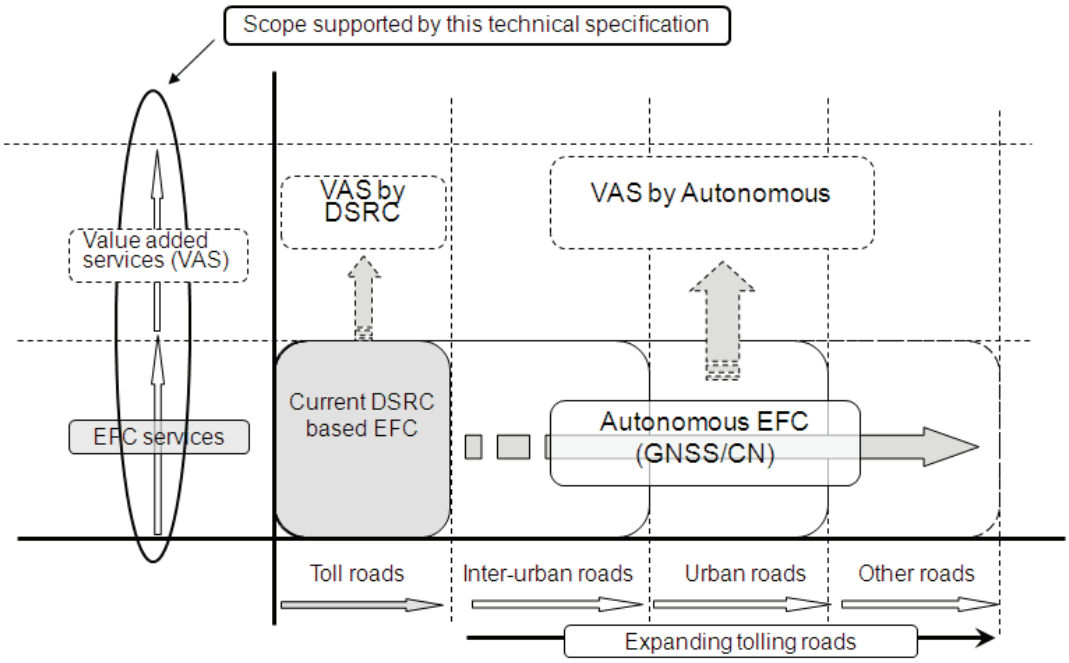

Figure 1 — Image of expanding toll roads and services (Case-3)

Purpose of this Technical Specification

This Technical Specification aims to make it possible for toll road operators to introduce autonomous systems to present non-toll roads by enhancing the functionalities of DSRC-On-Board Equipment (OBE) cooperating with external in-vehicle devices.

As listed below, this Technical Specification defines several tolling models, message sets, and data elements to cope with diversified EFC environment in the main body, as well as data type definition and Protocol Implementation Conformance Statement (PICS) proforma defined in Annex A and Annex B respectively. Finally, applicable ITS-services with cooperation of DSRC-OBE and external in-vehicle devices are listed in Annex E with an example for each of them. This Technical Specification aims at defining the following:

— tolling models with external in-vehicle devices (in main body);

— definitions of message sets and data elements;

— data type definition and PICS proforma (in Annexes A and B);

— related example and applicable Intelligent Transport System (ITS) services (in Annex E).

© ISO 2014 – All rights reserved
Documents
Document Sharing Hub
Full document details: PD ISO/TS 16785:2014

Electronic Fee Collection (EFC) — Interface definition between DSRC-OBE and external in-vehicle devices

1 Scope

This Technical Specification defines an application interface between DSRC-based OBE and external in-vehicle devices to make DSRC-OBE applicable for diversified tolling environment.

The scope of this Technical Specification covers the following items (also shown in Figure 2);

— Definitions of the application interface between DSRC-OBE and external in-vehicle devices (including GNSS, cellular units, CAN interface, etc.).

— Definitions of message sets and data elements on the interface (based on a sets of base standards, such as ISO 14906:2011, ISO/TS 17575, ISO/TS 13141, ISO/TS 12813, and ISO/TS 25110).

— For use in autonomous EFC systems, as well as DSRC-based EFC.

— For use in diversified tolling environment (in toll roads, inner-urban, inter-urban, etc.).

— For use in every kind of DSRC-OBE (based on CEN, UNI, ARIB, TTA, and GB/T).

The following items are out of the scope for this TS:

— Definitions of hardware in the external in-vehicle devices such as GNSS modules, cellular modules, mobile devices, smartphones, etc.

— Definitions of physical interface between DSRC-OBE and external in-vehicle devices such as USB, Bluetooth, etc.

— Definition of any ITS service other than EFC.

— Definition of algorithms for authentication, as well as encryption, and key management.

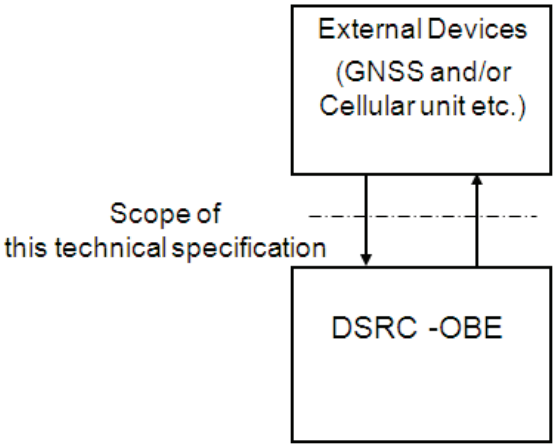

Figure 2 — Scope of this Technical Specification

Applicable DSRC-OBE

When standardizing an application interface between DSRC-OBE and external in-vehicle devices, external in-vehicle devices should be commonly applied for every kind of DSRC-based OBE as shown in Figure 3.

© ISO 2014 – All rights reserved

Documents
Document Sharing Hub

Full document details: PD ISO/TS 16785:2014

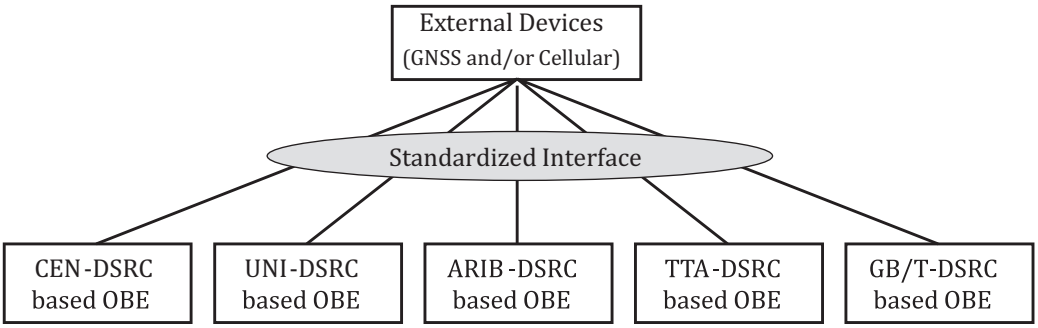

Figure 3 — Applicable DSRC-OBE

The solid and proven DSRC technology makes it possible for DSRC-OBE to have long product-life that enables DSRC-based EFC to be operated still in the future.

On the other hand, each component of external in-vehicle devices has been developed year by year to cope with user's demands on high performance, as well as multi-functional devices; therefore, they have shorter product-life rather than DSRC-OBE. Once an application interface is standardized, DSRC-OBE can be used continuously for diversified EFC environment with enhanced new external in-vehicle devices. See Figure 4.

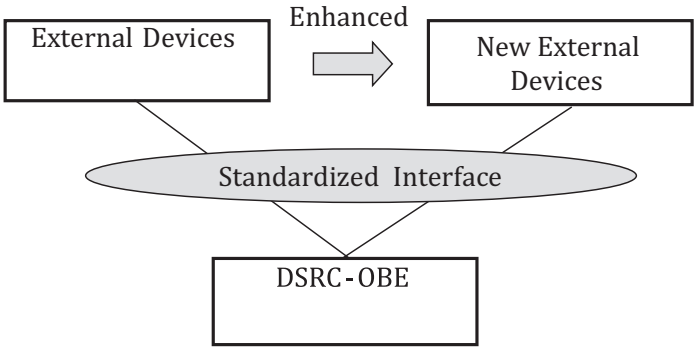

Figure 4 — Applicability for future upgrading

2 Normative references

The following documents, in whole or in part, are normatively referenced in this document and are indispensable for its application. For dated references, only the edition cited applies. For undated references, the latest edition of the referenced document (including any amendments) applies.

ISO/IEC 9798-4:1999, *Information technology — Security techniques — Entity authentication — Part 4: Mechanisms using a cryptographic check function*

ISO 14906:2011, *Electronic Fee Collection — Application interface definition for dedicated short-range communication*

ISO/TS 17575-1:2010, *Electronic Fee Collection — Application interface definition for autonomous systems — Part 1: Charging*

ISO/TS 17575-3:2011, *Electronic Fee Collection — Application interface definition for autonomous systems — Part 3: Context data*

ISO/TS 13141:2010, *Electronic Fee Collection — Localisation augmentation communication for autonomous systems*

© ISO 2014 – All rights reserved
Documents
Document Sharing Hub
Full document details: PD ISO/TS 16785:2014

ISO/TS 12813:2009, *Electronic Fee Collection — Compliance check communication for autonomous systems*

3 Terms and definitions

For the purposes of this document, the following terms and definitions apply.

3.1
access credentials
trusted attestation or secure module that establishes the claimed identity of an object or application

3.2
attribute
addressable package of data consisting of a single data element or structured sequences of data elements

3.3
autonomous systems
one method of EFC that operate without relying on dedicated road-side infrastructure by employing wide-area technologies such as Global Navigation Satellite Systems (GNSS) and Cellular Communications Networks (CN)

3.4
authenticator
data, possibly encrypted, that is used for authentication

3.5
contract
expression of an agreement between two or more parties concerning the use of the road infrastructure

[SOURCE: ISO 14906:2011, 3.7]

3.6
cryptography
principles, means, and methods for the transformation of data in order to hide its information content, prevent its undetected modification, or prevent its unauthorised use

[SOURCE: ISO 7498-2:1989, 3.3.20, modified]

3.7
data group
class of closely related attributes

3.8
external in-vehicle devices
devices such as mobile phones or dedicated units consisting of GNSS and/or cellular modules that are connected to DSRC-OBE for upgrading the functionalities of it

3.9
issuer
entity responsible for issuing the payment means to the user

3.10
on-board equipment
OBE
equipment located on-board a vehicle including nomadic devices with the function of exchanging information with external systems

Note 1 to entry: The OBE does not need to include payment means.

[SOURCE: ISO 14906:2011, 3.13]

© ISO 2014 – All rights reserved

Documents
Document Sharing Hub
Full document details: PD ISO/TS 16785:2014

3.11
on-board unit
OBU
minimum component of an *on-board equipment* [3.10], whose functionality always includes at least the support of the DSRC interface

[SOURCE: ISO 14906:2011, 3.14]

3.12
roadside equipment
equipment located along the road, either fixed or mobile

3.13
Toll Service Provider
entity providing toll services in one or more toll domains

Note 1 to entry: In other documents, the terms issuer or contract issuer may be used.

Note 2 to entry: The Toll Service Provider may provide the OBE or may provide only a magnetic card or a smart card to be used with OBE provided by a third party (like a mobile telephone and a SIM card that can be obtained from different parties).

Note 3 to entry: The Toll Service Provider is responsible for the operation (functioning) of the OBE with respect to tolling.

[SOURCE: ISO 17573:2010, 3.23, modified]

3.14
transaction
whole of the exchange of information between two physically separated communication facilities

[SOURCE: ISO 14906:2011, 3.24, modified]

3.15
transaction model
functional model describing the structure of electronic payment transactions

[SOURCE: ISO 14906:2011, 3.25]

4 Symbols and abbreviated terms

For the purpose of this document, the following abbreviations apply throughout the document unless otherwise specified.

ADU Application Data Unit

APDU Application Protocol Data Unit

ARIB Association of Radio Industries and Businesses (Communication standardizing body in Japan)

ASN.1 Abstract Syntax Notation One (ISO/IEC 8824-1)

CAN Controller Area Network

CCC Compliance Check Communication (ISO/TS 12813)

CE Central Equipment

DSRC Dedicated Short-Range communication

EFC Electronic Fee Collection

© ISO 2014 – All rights reserved
Documents
Document Sharing Hub
Full document details: PD ISO/TS 16785:2014

GB/T	Guojia Biaozhun/Tuijian (Chinese "Recommended National Standard")
GNSS	Global Navigation Satellite Systems
HMI	Human Machine Interface
ICC	Integrated Circuit Card
ITS	Intelligent Transport Systems
LAC	Localization Augmentation Communication (ISO/TS 13141)
OBE	On-board Equipment
OBU	On-board Unit
PMI	Payment Means Issuer
PICS	Protocol Implementation Conformance Statement
RSE	Roadside Equipment
SAM	Secure Application Module
TSP	Toll Service Provider
TTA	Telecommunications Technology Association (Communication standardizing body in Korea)
UNI	Ente Nazionale Italiano di Unificazione
USB	Universal Serial Bus

5 Tolling models with external in-vehicle devices

5.1 General

Multi-functional DSRC-OBE supported with external in-vehicle devices makes current societies smarter with introduction to diversified EFC environment and further ITS services.

There are two kinds of settlement method in EFC, one is on-board account (settlement) system using payment media such as IC card and the other is central account (settlement) system not using payment media. In this Technical Specification, on-board account system in which operational procedure is more complex than central account system is selected as a basic model for diversified EFC.

In the on-board account system, payment media is normally connected to DSRC-OBE and toll amount determined by charging transaction processes between DSRC-OBE and RSE is directly deducted from payment media. On the other hand, payment means can be included in or connected to external in-vehicle devices such as mobile phones. The latter case is shown in Annex D in which various possible tolling systems other than those mentioned in this clause are introduced.

© ISO 2014 – All rights reserved

Documents
Document Sharing Hub
Full document details: PD ISO/TS 16785:2014