PD ISO/TS 17929:2014

BSI Standards Publication

Biomechanical effects on amusement ride passengers

bsi.

...making excellence a habit.™

Document Sharing Hub

National foreword

This Published Document is the UK implementation of ISO/TS 17929:2014.

The UK participation in its preparation was entrusted by Technical Committee MCE/3, Safeguarding of machinery, to Subcommittee MCE/3/4, Fairground and amusement park machinery and structures - Safety.

A list of organizations represented on this committee can be obtained on request to its secretary.

This publication does not purport to include all the necessary provisions of a contract. Users are responsible for its correct application.

© The British Standards Institution 2014.
Published by BSI Standards Limited 2014

ISBN 978 0 580 82349 7
ICS 13.180; 97.200.40

Compliance with a British Standard cannot confer immunity from legal obligations.

This Published Document was published under the authority of the Standards Policy and Strategy Committee on 30 September 2014.

Amendments/corrigenda issued since publication

Date	Text affected

Documents
Document Sharing Hub

Full document details: PD ISO/TS 17929:2014

TECHNICAL SPECIFICATION

ISO/TS 17929

First edition
2014-09-15

Biomechanical effects on amusement ride passengers

Effets biomécaniques sur les passagers des manèges

Reference number
ISO/TS 17929:2014(E)

Documents
Document Sharing Hub

© ISO 2014

Full document details: PD ISO/TS 17929:2014

COPYRIGHT PROTECTED DOCUMENT

© ISO 2014

All rights reserved. Unless otherwise specified, no part of this publication may be reproduced or utilized otherwise in any form or by any means, electronic or mechanical, including photocopying, or posting on the internet or an intranet, without prior written permission. Permission can be requested from either ISO at the address below or ISO's member body in the country of the requester.

ISO copyright office
Case postale 56 • CH-1211 Geneva 20
Tel. + 41 22 749 01 11
Fax + 41 22 749 09 47
E-mail copyright@iso.org
Web www.iso.org

Published in Switzerland

© ISO 2014 – All rights reserved

Documents
Document Sharing Hub

Full document details: PD ISO/TS 17929:2014

Contents

Page

Foreword iv
Introduction v
1 Scope 1
2 Normative references 1
3 Terms and definitions 1
4 Degrees of potential biomechanical risks for amusement rides 3
5 Measures for elimination or reduction of hazards due to biomechanical effects 5
6 Effects of accelerations on passengers 7
7 Zones of potential biomechanical risk in the reach envelope of passengers for motion risk analysis and unscheduled braking risk analysis 7
Annex A (informative) **Body dimensions of passengers from 1,20 m up to 2,0 m tall for motion risk analysis and unexpected braking risk analysis** 8
Annex B (informative) **Recommended acceleration limits** 13
Annex C (informative) **Hazard of passengers being held in an upside-down position in emergency** 20
Annex D (informative) **Use of amusement rides considering the state of health or well-being of passengers — Warning signs to advise passengers** 21
Bibliography 23

© ISO 2014 – All rights reserved

Documents
Document Sharing Hub
Full document details: PD ISO/TS 17929:2014

Foreword

ISO (the International Organization for Standardization) is a worldwide federation of national standards bodies (ISO member bodies). The work of preparing International Standards is normally carried out through ISO technical committees. Each member body interested in a subject for which a technical committee has been established has the right to be represented on that committee. International organizations, governmental and non-governmental, in liaison with ISO, also take part in the work. ISO collaborates closely with the International Electrotechnical Commission (IEC) on all matters of electrotechnical standardization.

The procedures used to develop this document and those intended for its further maintenance are described in the ISO/IEC Directives, Part 1. In particular the different approval criteria needed for the different types of ISO documents should be noted. This document was drafted in accordance with the editorial rules of the ISO/IEC Directives, Part 2 (see www.iso.org/directives).

Attention is drawn to the possibility that some of the elements of this document may be the subject of patent rights. ISO shall not be held responsible for identifying any or all such patent rights. Details of any patent rights identified during the development of the document will be in the Introduction and/or on the ISO list of patent declarations received (see www.iso.org/patents).

Any trade name used in this document is information given for the convenience of users and does not constitute an endorsement.

For an explanation on the meaning of ISO specific terms and expressions related to conformity assessment, as well as information about ISO's adherence to the WTO principles in the Technical Barriers to Trade (TBT) see the following URL: Foreword - Supplementary information

The committee responsible for this document is ISO/TC 254, *Safety of amusement rides and amusement devices*.

© ISO 2014 – All rights reserved
Documents
Document Sharing Hub
Full document details: PD ISO/TS 17929:2014

Introduction

Most passenger-carrying devices, e.g. vehicles, transport systems, elevators, cableways, and other similar structures, are deliberately designed to minimize biomechanical effects on passengers. Amusement rides are different in that the biomechanical effects are deliberately introduced in order to amuse people through stimulation of their sensory system.

Thus, in addition to mechanical, electrical and other hazards, amusement rides could feature significant biomechanical hazards for passengers. Passengers being moved by amusement rides are subject to inertia forces. The magnitude, direction, duration of exposure to, and rate of change of, these forces could create risks that need to be minimized. The risks may be increased by the use of entertaining effects.

Design of the amusement ride in accordance with this Technical Specification, together with ISO 17842, minimizes any risks from these biomechanical effects.

When it is important for safety reasons, passenger weight, height, and age also need to be considered.

Moreover, amusement ride passengers can have different states of health or well-being during a ride cycle and there is a probability of injury not due to any amusement ride defect but owing to the individual health state of a passenger. When a designer, manufacturer or operator provides a warning before the ride entrance for guests, making them aware of ride use restrictions considering their state of health (see Annex D), this can limit legal liability for possible harm to passengers in poor health.

© ISO 2014 – All rights reserved

Documents
Document Sharing Hub
Full document details: PD ISO/TS 17929:2014

Biomechanical effects on amusement ride passengers

1 Scope

This Technical Specification has been drawn up with the objective of ensuring the safety of amusement ride passengers, based on the international experience of manufacture and operation of such structures throughout the world gained over decades prior to its publication.

It enables the identification of potential hazards and classification of biomechanical effects, including information on recommended acceleration limits, rate of their onset and their duration, to ensure acceptable degrees of biomechanical risks at the stage of amusement ride design, as well as to take such risks into account during development of operational procedures and information on use limitations for amusement ride guests.

It gives recommendations regarding use limitations for amusement rides in accordance with the health condition and the well-being of passengers. It also specifies body dimensions of passengers 1,20 m to 2,0 m in height for motion risk analysis on amusement rides. These body dimensions can be taken into account when designing passenger containments and restraints.

It does not cover devices used in the circus, theatre or sports, or other devices intended for use only by specially trained people. Nevertheless, it can be used in the design of any similar structural or passenger-carrying device even if it does not explicitly mention the device.

This Technical Specification is not applicable to amusement rides put into operation before the date of its publication.

2 Normative references

The following documents, in whole or in part, are normatively referenced in this document and are indispensable for its application. For dated references, only the edition cited applies. For undated references, the latest edition of the referenced document (including any amendments) applies.

ISO 17842 (all parts)—[1], *Safety of amusement rides and amusement devices*

3 Terms and definitions

For the purposes of this document, the following terms and definitions apply.

3.1
amusement ride
equipment that is designed to entertain the passengers during motion, including biomechanical effects

3.2
biomechanical effects
effects of forces on passengers of amusement rides associated with their motion

3.3
degree of potential biomechanical risk
likelihood of causing harm as a result of biomechanical effects of different values considering the possible severity of consequences

1) To be published.

© ISO 2014 – All rights reserved

Documents
Document Sharing Hub

Full document details: PD ISO/TS 17929:2014

3.4
entertaining effect
psycho-emotional effect
action on the human sense organs associated with the use of visual effects, illumination, darkness, fire, water, wind, sounds, smells, etc. with the purpose of entertaining people

3.5
fence
structure designed to restrict or prevent movement across a boundary

3.6
high potential biomechanical risk degree
RB-1
potential of causing fatal harm to a passenger or passengers resulting from biomechanical effects

3.7
low potential biomechanical risk degree
RB-3
potential of causing harm with temporary disability of a passenger or passengers resulting from biomechanical effects.

3.8
medium potential biomechanical risk degree
RB-2
potential of causing severe harm to health of a passenger or passengers resulting from biomechanical effects

3.9
motion risk envelope
zones around the bodies of passengers carried by the amusement ride within the reach envelopes in which, if it is intruded by any structures or foreign obstacles, the passengers may be exposed to harm of varying degrees of severity

3.10
negligible potential biomechanical risk degree
RB-4
potential of causing harm without any form of disability to a passenger or passengers resulting from biomechanical effects

3.11
passenger containment
components (e.g. seating, foot wells, handrails, and passenger restraints) designed to prevent passengers from moving outside a predetermined area on a ride either as a result of biomechanical effects or the ride forces or the behaviour of the passenger

3.12
rate of onset of acceleration
value that characterizes the rate of acceleration growth during the given time interval (third derivative of movement in time)

3.13
restraint
system, device, or characteristic that is intended to inhibit or restrict the body movement and/or keep the body position to tolerate accelerations of the passenger(s) while on the amusement ride

3.14
use limitation
limitation for passengers with health deviations including but not limited to reasons related to their age, height or weight as well as for guests who are not feeling well to use an amusement ride safely

© ISO 2014 – All rights reserved
Documents
Document Sharing Hub
Full document details: PD ISO/TS 17929:2014

4 Degrees of potential biomechanical risks for amusement rides

When people are being moved by an amusement ride, the respective potential risks of harm may be present depending on the potential fall height, values of velocity and accelerations, angle of the seat inclination or turnover. Therefore, measures to reduce or eliminate risks shall be taken with regard to the types and degrees of biomechanical effects acting on passengers. In order to analyse the risks and possible consequences of failures, it is important to take into account how people are exposed to biomechanical effects and the frequency of such exposure.

Biomechanical effects produced by amusement rides are not always suitable for people with health problems or who are simply not feeling well at the time, and therefore it is necessary to warn people of how extreme the amusement ride may be and of any use limitations.

Types of injuries depending on the severity of harm to the human body can include but are not limited to

a) traumatic brain injury (TBI),

b) vascular injury due to turning upside down,

c) cardiac arrhythmia due to stress and/or accelerations action,

d) severe injury of internal organs due to impact,

e) injury of a musculoskeletal system when exposed to high accelerations, and

f) loss of consciousness due to accelerations.

If the safety measures taken are not adequate, any biomechanical effects of an RB-1 value may cause catastrophic harm to health or life of people, those effects may, for example, include falling from the height of over 8 m; being hit against an obstacle at a speed of higher than 20 m/s; ejection of an unrestrained passenger out of a passenger unit; falling of an unrestrained passenger headlong out of a turned over passenger unit or seat from the height of more than 3 m.

Similarly, any biomechanical effects of an RB-2 value may cause critical harm to health, including a severe injury or disability, and any biomechanical effects of an RB-3 value may cause harm to health such as temporary disorder. It should be noted that, if safety measures are insufficient and any unfavourable events or situations occur, increased biomechanical effects may result in high risk which will require risk analysis.

Identification of types and values of effects and degree of potential biomechanical risks shall be performed using Table 1. Figures 1 a), 1 b), and 1 c) illustrate inclination types of passenger seats.

© ISO 2014 – All rights reserved

Documents
Document Sharing Hub
Full document details: PD ISO/TS 17929:2014

Table 1 — Types and values of effects to which passengers are exposed and degrees of potential biomechanical risks

Type of biomechanical effect	Notation	Degree of potential biomechanical risk			
		RB-1	RB-2	RB-3	RB-4
Lift to or drop from a relative height[a]	H, m	$H > 8$	$2 < H \leq 8$	$0{,}4 < H \leq 2$	$H \leq 0{,}4$
Travel at a relative velocity	V, m/s	$V > 20$	$10 < V \leq 20$	$3 < V \leq 10$	$V \leq 3$
Lift or drop in seat with inclination:	H, m	$H \geq 3$	$2 < H \leq 3$	$0{,}4 < H \leq 2$	$H < 0{,}4$
— forward inclination [Figure 1 a)]	α, degrees	$135 < \alpha \leq 180$	$45 < \alpha \leq 135$	$10 < \alpha \leq 45$	
— backward inclination [Figure 1 b)]	β, degrees	$135 < \beta \leq 180$	$105 < \beta \leq 135$	$95 < \beta \leq 105$	
— sideward inclination [Figure 1 c)]	γ, degrees	$120 \leq \gamma \leq 180$	$60 \leq \gamma \leq 120$	$30 < \gamma \leq 60$	

[a] The degrees of biomechanical risks are based on the statistics regarding consequences of injuries to people when falling from height.

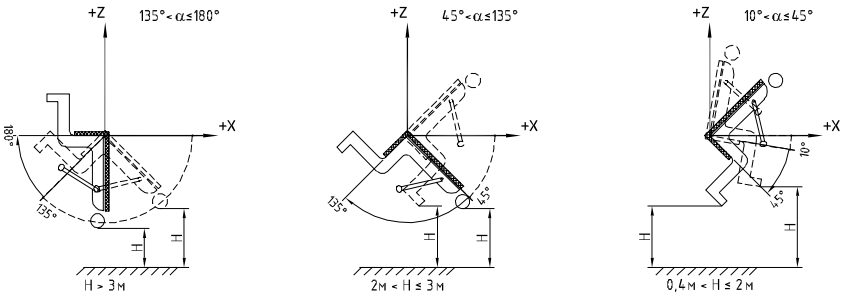

a) Forward inclination

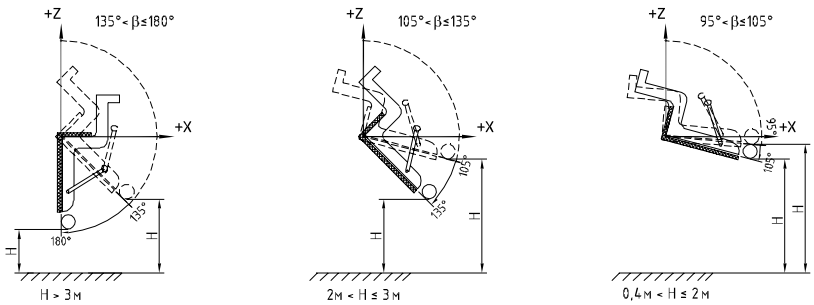

b) Backward inclination

© ISO 2014 – All rights reserved
Documents
Document Sharing Hub
Full document details: PD ISO/TS 17929:2014