PD ISO/TS 20273:2017

BSI Standards Publication

# Guidelines on weld quality in relationship to fatigue strength

Documents
Document Sharing Hub

Full document details: PD ISO/TS 20273:2017

# National foreword

This Published Document is the UK implementation of ISO/TS 20273:2017.

The UK participation in its preparation was entrusted to Technical Committee WEE/36, Qualification of welding personnel and welding procedures.

A list of organizations represented on this committee can be obtained on request to its secretary.

This publication does not purport to include all the necessary provisions of a contract. Users are responsible for its correct application.

© The British Standards Institution 2017
Published by BSI Standards Limited 2017

ISBN 978 0 580 96536 4

ICS 25.160.40

**Compliance with a British Standard cannot confer immunity from legal obligations.**

This Published Document was published under the authority of the Standards Policy and Strategy Committee on 30 September 2017.

**Amendments/corrigenda issued since publication**

| Date | Text affected |
|---|---|

Documents
Document Sharing Hub

Full document details: PD ISO/TS 20273:2017

TECHNICAL SPECIFICATION

# ISO/TS 20273

First edition
2017-08

# Guidelines on weld quality in relationship to fatigue strength

*Lignes directrices sur la qualité de la soudure en rapport à la résistance à la fatigue*

Reference number
ISO/TS 20273:2017(E)

Documents
Document Sharing Hub

© ISO 2017

Full document details: PD ISO/TS 20273:2017

**COPYRIGHT PROTECTED DOCUMENT**

© ISO 2017, Published in Switzerland

All rights reserved. Unless otherwise specified, no part of this publication may be reproduced or utilized otherwise in any form or by any means, electronic or mechanical, including photocopying, or posting on the internet or an intranet, without prior written permission. Permission can be requested from either ISO at the address below or ISO's member body in the country of the requester.

ISO copyright office
Ch. de Blandonnet 8 • CP 401
CH-1214 Vernier, Geneva, Switzerland
Tel. +41 22 749 01 11
Fax +41 22 749 09 47
copyright@iso.org
www.iso.org


© ISO 2017 – All rights reserved

Documents
Document Sharing Hub

Full document details: PD ISO/TS 20273:2017

# Contents

Page

**Foreword** ... **iv**
**Introduction** ... **v**
**1 Scope** ... **1**
**2 Normative references** ... **1**
**3 Terms and definitions** ... **1**
**4 Symbols and abbreviated terms** ... **2**
**5 Background** ... **3**
5.1 General ... 3
5.2 Design for purpose ... 3
5.3 Fatigue assessment procedures ... 5
5.4 Classification of weld imperfections and features ... 6
**6 Weld quality levels for fatigue loaded structures** ... **7**
6.1 Assessment of weld quality ... 7
6.2 Requirements for a production standard weld quality ... 8
6.2.1 General ... 8
6.2.2 Effect of toe geometry ... 8
6.2.3 Effect of misalignment ... 10
6.2.4 Effect of undercut ... 12
6.2.5 Effect of cold laps ... 13
6.2.6 Effect of inclusions and porosity ... 14
6.2.7 Effect of cracks and crack-like imperfections ... 15
6.3 Design of Experiments (DoE) using simulation ... 19
6.3.1 General ... 19
6.3.2 Parameters using the effective notch method on butt welds ... 20
6.3.3 Parameters using the effective notch method on fillet welds ... 21
6.4 Fatigue design of high quality welds ... 23
6.4.1 General ... 23
6.4.2 Effect of improvement methods ... 23
6.4.3 Improvement of shape of weld toe ... 24
6.4.4 Improvement by compressive residual stress ... 24
**7 Root side requirements** ... **24**
7.1 General ... 24
7.2 Joints with weld root as weakest point ... 24
7.3 Designation for penetration ... 25
7.4 Design of Experiments in load carrying joints ... 26
7.5 Throat size vs penetration ... 28
**8 Fitness for service** ... **30**
8.1 General ... 30
8.2 Fatigue assessment by crack propagation ... 32
8.3 Material parameters for crack propagation ... 32
8.4 Formulae for stress intensity factors ... 33
8.4.1 General ... 33
8.4.2 Standard solutions ... 33
8.4.3 Solutions for magnification function, $M_k$ ... 35
8.4.4 Examples of a fracture mechanics assessment ... 37
**Bibliography** ... **43**

© ISO 2017 – All rights reserved


Documents
Document Sharing Hub
Full document details: PD ISO/TS 20273:2017

# Foreword

ISO (the International Organization for Standardization) is a worldwide federation of national standards bodies (ISO member bodies). The work of preparing International Standards is normally carried out through ISO technical committees. Each member body interested in a subject for which a technical committee has been established has the right to be represented on that committee. International organizations, governmental and non-governmental, in liaison with ISO, also take part in the work. ISO collaborates closely with the International Electrotechnical Commission (IEC) on all matters of electrotechnical standardization.

The procedures used to develop this document and those intended for its further maintenance are described in the ISO/IEC Directives, Part 1. In particular the different approval criteria needed for the different types of ISO documents should be noted. This document was drafted in accordance with the editorial rules of the ISO/IEC Directives, Part 2 (see www.iso.org/directives).

Attention is drawn to the possibility that some of the elements of this document may be the subject of patent rights. ISO shall not be held responsible for identifying any or all such patent rights. Details of any patent rights identified during the development of the document will be in the Introduction and/or on the ISO list of patent declarations received (see www.iso.org/patents).

Any trade name used in this document is information given for the convenience of users and does not constitute an endorsement.

For an explanation on the voluntary nature of standards, the meaning of ISO specific terms and expressions related to conformity assessment, as well as information about ISO's adherence to the World Trade Organization (WTO) principles in the Technical Barriers to Trade (TBT) see the following URL: www.iso.org/iso/foreword.html.

This document was prepared by Technical Committee IIW, *International Institute of Welding,* Commission XIII, *Fatigue of welded components and structures*.

Requests for official interpretations of any aspect of this document should be directed to the ISO Central Secretariat, who will forward them to the IIW Secretariat for an official response.


© ISO 2017 – All rights reserved
Documents
Document Sharing Hub
Full document details: PD ISO/TS 20273:2017

# Introduction

This document has been derived from the main results given in Reference [28] which was previously published as XIII-2510-13. It constitutes the considered judgment of experts on fatigue in welded joints assuming thicker plates in steel. For further or more detailed information, see Reference [28].

This document is applicable where fatigue assessment is assumed to be based on either the nominal stress approach or structural stress approach as defined by References [1] and [2]. More refined fatigue assessment methods based on notch stress concepts or fracture mechanics already included the ability to completely or partially account for weld geometric features and imperfections and are not specifically covered by this document.

It is assumed that the user has a working knowledge of the basics of fatigue and fracture mechanics. In some cases, working knowledge of finite element analysis is also needed. The recommendations and guidelines are considered to reflect the fatigue strength of the welded joint itself with a defined survival probability but without environmental effects. They are thus applicable to many industrial sectors. It is assumed that the user will apply good principals of limit state structural design. Appropriate partial safety factors for load and resistance are to be applied depending on the industry. This document does not define the partial safety factors for load or resistance to be used in fatigue assessment.

© ISO 2017 – All rights reserved

Documents
Document Sharing Hub
Full document details: PD ISO/TS 20273:2017

# Guidelines on weld quality in relationship to fatigue strength

## 1 Scope

This document provides guidance for setting appropriate weld quality requirements in relation to fatigue.

This document is applicable to fusion (arc and/or beam welding) welded steel plate-type structures having a thickness of >3 mm, which are subjected to cyclic loading.

Due to lack of experimental data for aluminium welds and ultra-high strength steels, the fatigue strength (or S-N) curves apply only to structural steel up to a maximum specified yield strength of 960 MPa.

The acceptance criteria in this document may be applied to higher strength steels, stainless steels and certain concepts to 5000 and 6000 series of aluminium alloys which are commonly used in welded structures. In the absence of relevant published data, it is recommended that this be quantified by special testing.

## 2 Normative references

There are no normative references in this document.

## 3 Terms and definitions

For the purposes of this document, the following terms and definitions apply.

ISO and IEC maintain terminological databases for use in standardization at the following addresses:

— ISO Online browsing platform: available at http://www.iso.org/obp

— IEC Electropedia: available at http://www.electropedia.org/

**3.1**
**cold lap**
micro lack of fusion
region of non-fused *overlap* (3.7) between the weld metal and base plate which results in an imperfection parallel to the base plate

**3.2**
**effective notch stress**
elastic notch stress calculated for a notch with a certain assumed notch radius

**3.3**
**improved welds**
welds for which the weld toe is treated after welding by a grinding, re-melting or peening operation

Note 1 to entry: IIW guidelines for select post-weld treatment methods have been published.

**3.4**
**inclusion**
**slag inclusion**
non-metallic material entrapped in molten metal during solidification

© ISO 2017 – All rights reserved

Documents
Document Sharing Hub
Full document details: PD ISO/TS 20273:2017

**3.5**
**high quality weld**
weld with a lower level of imperfections such that it has fatigue strength greater than that defined in the IIW guidelines and recommendations with respect to nominal stress, *hot spot stress* (3.9) or *effective notch stress* (3.2)

Note 1 to entry: The improvement in fatigue strength is normally two FAT classes.

Note 2 to entry: Used in some standards.

**3.6**
**normal quality weld**
weld for which the level of imperfections is such that it satisfies the fatigue strength requirement defined in the IIW guidelines and recommendations with respect to nominal stress, *hot spot stress* (3.9) or *effective notch stress* (3.2)

**3.7**
**overlap**
protrusion of weld metal beyond the weld toe or weld root

Note 1 to entry: An overlap may be fused or non-fused. A toe overlap without fusion between the weld metal and base plate is the same as a *cold lap* (3.1).

**3.8**
**porosity**
cavities or pores caused by gas entrapment in molten metal during solidification

**3.9**
**structural stress**
**geometric stress**
**hot spot stress**
stress in a component, resolved to take into account the effects of a structural discontinuity on the surface at a hot spot, consisting of membrane and shell bending stress components

**3.10**
**undercut**
unfilled groove along the fusion line between weld metal and base plate

## 4 Symbols and abbreviated terms

| Symbol | Designation |
|---|---|
| FAT | All fatigue resistance data at 2 million cycles. The FAT classes are given as characteristic values, which are assumed to represent a survival probability of at least 95 %, calculated from mean value on the basis of a two-sided 75 % tolerance limits of the mean. Other existing definitions as e.g. a survival probability of 95 % on the basis of 95 % one-side limit of the mean or means minus two standard deviations corresponding to a survival probability of 97,7 % are practically equal for engineering applications.<br>Levels are arranged in steps. |
| $k_m$ | stress magnification factor for misalignment |
| $N_f$ | cycles to failure |
| $\Delta S$ or $\Delta\sigma$ | nominal stress range, acting on a structure |
| $\Delta S_c$ or $\Delta\sigma_c$ | characteristic nominal (resistance) stress range in MPa (see FAT above), but is a continuous variable when FAT are given in steps |
| $I$ | weld penetration |
| $R$ | weld toe radius |
| $a_i$ | initial crack dimensions |
| $t$ | thickness of plate |


© ISO 2017 – All rights reserved
Documents
Document Sharing Hub
Full document details: PD ISO/TS 20273:2017

| Symbol | Designation |
|---|---|
| *e* or *m* | misalignment between plates |
| *u* | undercut at weld toe |
| *α* | angle of weld |
| *a* | throat size of weld |
| *s* | *s*-measure from plate surface to butt joint weld penetration |

# 5 Background

## 5.1 General

Typical fabricated structures may have hundreds or even thousands of meters of weld. Thus, many potential fatigue cracking locations are present which should be considered during design development and production. The challenge is to optimize a design so that the welds have sufficient fatigue strength and fabrication quality to withstand the loads during the economic life of the structure or piece of equipment. Quality systems for welds are described in so-called weld class systems, such as ISO 5817[12] or Reference [50]. In these systems, acceptance limits are given for different weld geometry features or imperfections. Based on these limits, a weld is associated with a quality level, e.g. B, C or D. Intuitively, a high quality level, B, is assumed to perform better during service than a weld with a C or D quality level. The problem with the existing weld quality systems is that they were initially developed as a measure of "good workmanship" with respect to fabrication, i.e. as a measure of the skill of the individual or machine performing the operation. As such, they have been incorporated into a number of training and education programs for welders and weld inspectors. However, numerous studies have shown that the link between the existing weld quality classes and fatigue performance is not consistent.[16][52][53] Some acceptance criteria for some weld features or imperfections are found to have little or no influence on fatigue strength. For features which do influence fatigue strength, the acceptance criteria between quality classes, do not result in uniform changes in the fatigue strength. Realizing that fatigue is highly affected by the local geometric features and imperfections of the weld, systems like ISO 5817 could have been a good tool for quality measures regarding fatigue.

Designers of welded structures, on the other hand, think of weld quality in terms of performance, often called "design for purpose". In this realm, quality would mean that a weld is able to perform its required function during the economic life of the component or structure. The required function may be a major like resistance to fatigue failure, sufficient strength with respect to extreme loads, permeability or corrosion resistance or the required function could be a minor functional property like hardness, resistance to abrasion, visual appearance or surface finish. This way of thinking is consistent with modern design guidelines for structures which are based on limit state design considerations. One important feature of limit state design is the existence of clearly identified conditions or limits that constitute failure or feasibility for a structure. For a designer, any discussion of quality should relate the definition of weld quality with the limit state(s) that quantify failure. Fatigue strength is one of the most demanding limit state design criteria for welded structures.

## 5.2 Design for purpose

The characteristic of the predominant load on the component is a major guiding consideration when formulating quality guidelines for load-carrying structures. For predominantly statically loaded welds, design calculations are based on the average stress in the weld net area. For this reason, ductility of the heat-affected zone (HAZ) and weld metal and sufficient weld throat thickness are the most important features. Imperfections like porosity, undercuts or cold laps have very little influence on the static capacity as long as the weld is ductile and the imperfections are small enough so as not to significantly reduce the weld cross-sectional area. Thus, ISO 5817 includes many acceptance criteria which are not relevant for static loaded joints. Throat thickness is by far the most significant geometric feature of a weld subjected to predominantly static loading. Weld type (butt, fillet, V-weld, K-weld), does not significantly influence strength for equal throat thickness.

© ISO 2017 – All rights reserved

Documents
Document Sharing Hub
Full document details: PD ISO/TS 20273:2017

Ductility and throat thickness are ensured by pre-production tests to validate the welding procedure specification (WPS). The same specification should ensure that crack-like imperfections are not formed during welding. For welded structures in high strength steel, matching or overmatching of the weld metal strength may be difficult to achieve. In this case, insufficient static strength of the filler material can be compensated by adding filler material. Loss of ductility, however, cannot always be compensated for by adding material so this is considered to be the most important basic requirement of welding. Joint ductility is assumed in all types of structural durability assessment. The WPS provides a guideline which ensures the deformation capacity and strength of the joint. Thus, when defining the welding parameters, it is important to prioritize those parameters that produce required quality. Following this, aspects which improve productivity can be considered. Some structures will naturally have only very low load carrying requirements and in these cases, optimization of production costs can bring significant savings for fabrication. One example of this type of weld may be, for example, long fixing welds in statically loaded structures.

For predominantly fatigue loaded structures, the demands of ductility and sufficient throat thickness are to be maintained. But, because fatigue strength is significantly influenced by the local characteristics of the joint, extra requirements with respect to weld geometry and imperfections are imposed. In addition to throat thickness and ductility, Reference [23], for example, identifies seven additional weld features which strongly influence fatigue strength: penetration, cold lap size, inner lack of fusion, weld toe transition radius, undercut size, joint misalignment and porosity (see Figure 1). It can be noted that in some technical literature, the cold lap imperfection in Figure 1 is sometimes referred to as a micro lack of fusion or a non-fused overlap. In technical literature, there is some inconsistency as to the definition of throat thickness, $a$, for partially penetrated welds. In this document, the definition is consistent with the Eurocodes, i.e. weld throat thickness also includes the penetration. The fillet size, $a^*$, is defined as being measured from the intersection of the plates as shown in Figure 1. Thus, for fillet welds with no penetration, $a = a^*$, and for fillet welds with penetration, $a$, approximately $a^* + i/\sqrt{2}$. Porosity is categorized based on pore location, diameter and whether the pores occur singly or as a cluster. Weld angle can have an influence on fatigue strength. However, for fillet welds with high fatigue strength, weld angle is less important than weld toe radius. For welds which have fatigue strength meeting IIW Recommendations, $\alpha \geq 120°$ is sufficient.

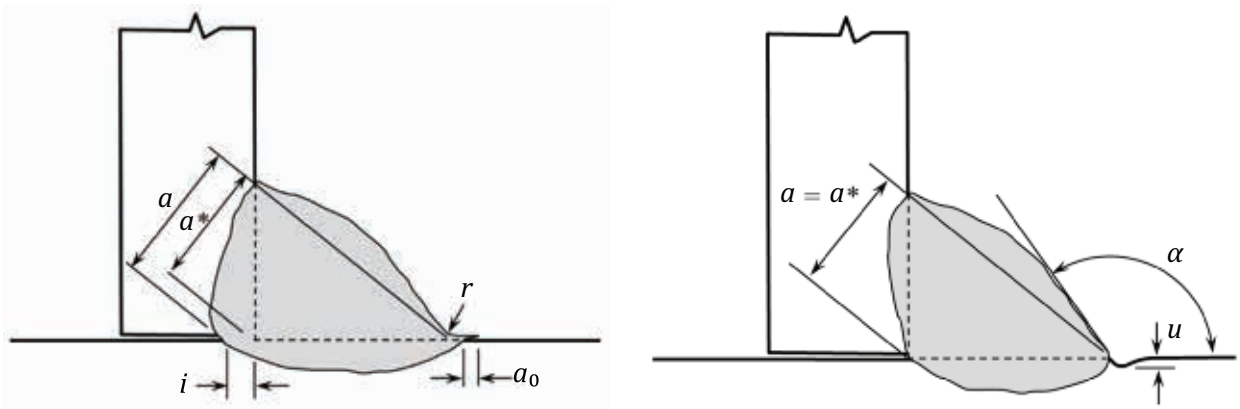


**Key**

$a$ throat thickness

$a^*$ fillet size

$a_0$ cold lap length

$\alpha$ weld angle

$i$ weld penetration

$r$ weld toe radius

$u$ depth of undercut

**Figure 1 — Fillet weld geometry features which significantly influence fatigue strength**


© ISO 2017 – All rights reserved
Documents
Document Sharing Hub
Full document details: PD ISO/TS 20273:2017

Root side fatigue can be the result of poor design or improper WPS. If a full penetration weld is not designated, lack of penetration may serve as a large initial defect. The greater defect, the shorter the expected life so the root side fatigue strength can vary from near zero to a value far exceeding the fatigue strength of the weld toe or plate edge. Designing against fatigue is thus strongly dependent on the weld penetration. The needed value of "*i*" is determined by analysis using the effective notch method, fracture mechanics or other suitable method. It is suggested that root side penetration should be specified on the production drawing and that the quality requirement is simply that penetration is equal to or greater than this value.

Based on the type of loading, differentiation is to be made between various joint categories. Design criteria and quality requirements will depend heavily on the primary function of the joint. Applied loads and structural geometry together establish the joint function. This is basically the essence of the concept called "Design for Purpose". The simple welded T-joints presented in Figure 2 can have numerous functions based on the applied forces, F1 to F4.

If the joint is loaded by the force component F1, the weld is a shear-loaded longitudinal weld. Web-to-flange welds in plate girders are typical examples of this type of weld. In such cases, the acceptance criteria related to the weld toe are rarely significant but failure from the weld root can occur.

For the longitudinal weld loaded by F2, weld start and stop positions become critical and the waviness of the fusion line can have strong influence on fatigue strength. If the joint is loaded by the force component F3, the weld is a non-load carrying accessory weld and the weld toe geometry at the base plate to weld fusion line becomes crucial, i.e. by cold lap size, weld toe transition radius and undercut size. Welds loaded by F3 can also be considered as moderately demanding with respect to fabrication. A non-loaded accessory weld will never be critical in static loading cases but will often lead to fatigue failure.

For load-carrying fillet welds subjected to F4, the weld toe geometry at the attachment-to-weld fusion line is critical. Cold lap size, inner lack of fusion, weld toe transition radius, undercut size, joint misalignment porosity and weld penetration all potentially have strong influence on the fatigue strength of the joint. For a weld loaded with force F4, a root side fatigue crack can also develop depending on the degree of penetration. Welds loaded by F4 are the most demanding both with respect to design and fabrication because both the weld toe side and root side is to be considered.

## 5.3 Fatigue assessment procedures

Numerous fatigue assessment methods have been introduced to assess the durability of metal structures under cyclic loading. Finite element (FE) modelling is an integral part of most design and analysis work and methods have evolved as the analysis possibilities have become more sophisticated and computers have increased in speed and memory capacity. Fatigue assessment places two conflicting demands on the analysts. The fatigue damage process itself is highly local, thus requiring a fine FE mesh. On the other hand, welded structures are frequently large and geometrically complex, they have numerous load input locations and they have boundary conditions which may be difficult to define. These demands are best satisfied with a large FE model. Because of this conflict, fatigue assessment is frequently the slowest link in the design process of welded structures.

The fatigue resistance and fatigue life of welded joints can be evaluated based on fatigue testing or analysis using the nominal stress method, the hot spot method, the notch stress/strain method or crack growth simulations based on linear elastic fracture mechanics. The different assessment methods are described in detail in the IIW recommendations on fatigue[1] and will not be repeated here.

© ISO 2017 – All rights reserved

Documents
Document Sharing Hub
Full document details: PD ISO/TS 20273:2017

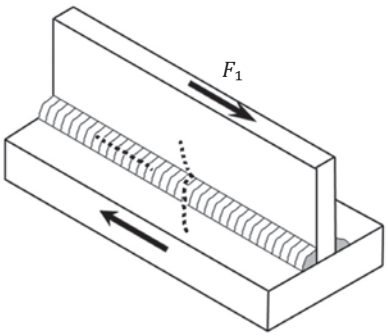


**a) Longitudinal shear loaded fillet weld**

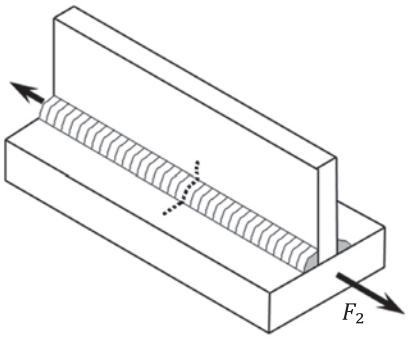


**b) Longitudinal normal loaded fillet weld**

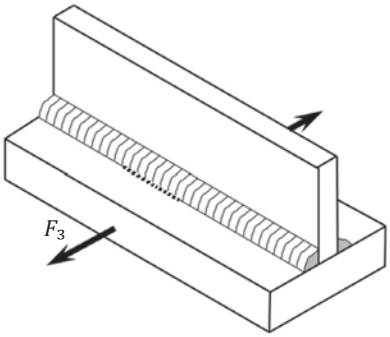


**c) Transverse normal non-load carrying fillet weld**

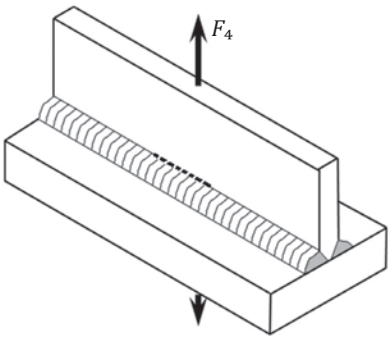


**d) Transverse normal load-carrying fillet weld, toe cracking**

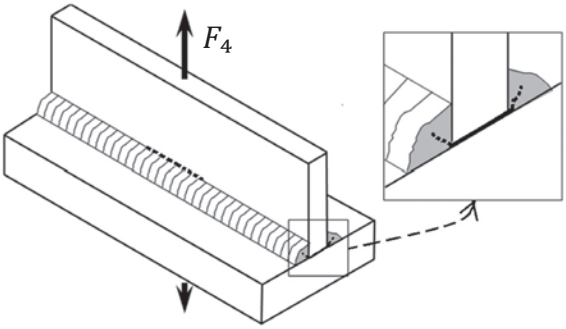


**e) Transverse load-carrying fillet weld, root cracking**

NOTE Dotted lines indicate fatigue critical points.

**Figure 2 — Joint classification determination based on joint loading/function**

## 5.4 Classification of weld imperfections and features

The designation and the classification of weld imperfections and features depends on both the material being joined (e.g. steel or aluminium) and the joining process (e.g. fusion welding, pressure welding, etc.).

A general designation system for imperfections of welding and allied process is contained in ISO/TS 17845[9], which covers both metallic and non-metallic materials. A classification of geometric imperfections in metallic materials is given for fusion welding in ISO 6520-1[10] and for welds made with in ISO 6520-2[11]. Neither standard includes classifications for metallurgical imperfections.


© ISO 2017 – All rights reserved
Documents
Document Sharing Hub
Full document details: PD ISO/TS 20273:2017

The geometric weld imperfections for fusion welding in ISO 6520-1 are relevant for arc and beam welding processes covering metallic materials: steel, nickel, titanium, aluminium and their alloys. The document contains the relevant classification of geometric imperfections for these welding processes but no information about the relevant quality level or limits are provided.

Acceptance limits for the imperfections defined in ISO 6520-1 are given in order to define quality levels. For arc-welded joints (excluding beam welding) in steel, nickel, titanium and their alloys, quality levels are defined in ISO 5817[12] and for aluminium and its alloys, the quality levels are defined in ISO 10042[13]. For electron and laser beam welded joints in steel, quality levels are defined in ISO 13919-1[14] and for aluminium and its alloys, in ISO 13919-2[15]. For laser-arc hybrid welding of steels, nickel and nickel alloys there are quality levels for imperfections in ISO 12932[17].

In these International Standards, which define quality levels and limits, the following quality classes are used:

— quality class B refers to high quality requirements;

— quality class C refers to middle quality requirements;

— quality class D refers to low quality requirements.

However, these acceptance limits have weak relation to fatigue as stated above. For more details on this, see Reference [28].

# 6 Weld quality levels for fatigue loaded structures

## 6.1 Assessment of weld quality

The imperfections and their classification into quality groups are mostly done by the guidance of introduced codes. One standard for weld quality is ISO 5817, an adoption of DIN 8563, which was established as a standard for communication between the welders and the inspectors. The classification criterion was the difficulty, the expenses or the efforts to fabricate or to inspect by NDT. So by nature, ISO 5817 has limits in direct application to fatigue problems; it is inconsistent in respect to fatigue properties and needs application guidance. In the 2014 version, an additional Annex C is present, where some requirements are given in relation to fatigue. Most dedicated design codes specify a general quality level according to ISO 5817 and give additional regulations. In this situation, the IIW fatigue design recommendations have extended the scope of usual fatigue design codes by describing the fatigue properties of joints containing weld imperfections on a scientific basis.

After inspection and detection of a weld imperfection, the first step of the assessment procedure is to determine the type and the effect of the imperfection by categorization as given in Table 1. If a weld imperfection cannot be clearly associated to a type or an effect of imperfections as listed here, it is recommended that it is assumed to be crack-like. The interpretation of additive imperfections is that they are adding their impact on fatigue, e.g. an undercut and a small toe radius. Competitive imperfections are not influencing each other and so will compete in being the most critical one, e.g. an inner pore and a small toe radius.

**Table 1 — Categorization and assessment procedure for weld imperfections**

| Effect of imperfection | | Type of imperfection | Assessment |
|---|---|---|---|
| **Rise of general stress level** | | Misalignment | Formulae for effective stress concentration |
| **Local notch effect** | **Additive** | Weld shape imperfections, undercut | Tables given |
| | **Competitive** | Porosity and inclusions not near the surface | Tables given |
| **Crack-like imperfection** | | Cracks, lack of fusion and penetration, all types of imperfections other than given here | Fracture mechanics |

© ISO 2017 – All rights reserved

Documents
Document Sharing Hub
Full document details: PD ISO/TS 20273:2017

## 6.2 Requirements for a production standard weld quality

### 6.2.1 General

In as-welded joints, the fatigue resistance is given by a so called FAT class (MPa). This is the stress range at $2 \times 10^6$ cycles for a certain survival probability, see FAT in nomenclature above. The spacing of the grid of resistance S-N-curves corresponds to a factor of $\sqrt[20]{10}$ = 1,122 and so they are arranged in certain defined steps. The other fatigue resistance values in this document also give the data in the same way for $2 \times 10^6$ cycles.

### 6.2.2 Effect of toe geometry

#### 6.2.2.1 General

Several assessment procedures do not consider the important effects of toe geometry. These are the nominal stress and the structural hot spot procedures, which reflect the toe geometries of the specimens which have been tested for the establishing of the codes or recommendations. The consequence is a wide scatter in the experimental results. There are two assessment procedures, by which the effects can be covered: the effective notch stress method and the fracture mechanics evaluation.

The governing parameters for fatigue properties failing from the weld toe are the toe radius, $r$, the weld transition angle, $\alpha$, the weld throat and the wall thicknesses of the joined plates (see Figure 1).

Various attempts have been made to derive the fatigue properties directly from the shape of the weld toe transition. For those calculations, three geometrical parameters have been used, such as weld toe radius, weld toe angle and wall thickness.

The mostly used formulae for the stress raising notch effect of the toe have been developed by References [18], [19] and [20]. When calculating a notch factor, $K_t$, it has to be considered that the transition from $K_t$ to $K_f$ is dependent of the stress gradient in thickness direction, and so also from the wall thickness, where $K_t$ is the geometric stress concentration factor and $K_f$ is the stress concentration factor which is effective for fatigue.

Since the weld toe radii ($r$) mainly depend on the welding procedure in shop and are independent from the wall thickness, the ratio of radius to wall thickness ($r/t$) varies, which in consequence leads to a dependence of fatigue properties of wall thickness, the so called thickness effect. Nominal and structural hot spot stress methods do not consider the geometric parameters of the weld toe. They need an extra compensation for the effect of wall thickness. Notch stress and fracture mechanics include this effect.

The fatigue resistance values for the effective notch stress method (with model radius of, for example, 1 mm) have been directly derived from re-calculation of experimental data and so the effect of the transition from $K_t$ to $K_f$ is implicitly considered. Using fracture mechanics crack propagation calculations, the decline of stress in thickness direction reduces the crack growth rate accordingly and thus considers the effect of the stress gradient.

#### 6.2.2.2 Toe radius in butt welds

The effect of the toe radius is directly covered by the effective notch and fracture mechanics method. This effect is not covered in the nominal and structural hot spot stress method and thus their effects might be estimated by the use of Table 2 and Table 3.

The assessment of the toe radius may be done after Reference [29]. The used exponent for the effect of radius, $r$, was taken as 0,125 and that on wall thickness, $t$, as 0,2.

Table 2 shows the relative factor on fatigue resistance at different wall thicknesses and transition radii, where the basic FAT value of 90 corresponds to 100 % or a factor 1,00 for a thickness of 25 mm, taken from the thickness effect. Table 2 is applicable for the nominal stress approach and translated data


© ISO 2017 – All rights reserved
Documents
Document Sharing Hub
Full document details: PD ISO/TS 20273:2017

to FAT is given in Table 3; note that $r/t$ > 0,02 (see Reference [29]). The tables also have assumed a "thinness" effect although this needs to be verified by tests.

$$\Delta\sigma \propto \left(\frac{r}{t}\right)^{0,125} \text{ and } \Delta\sigma \propto \left(\frac{25}{t}\right)^{0,2}$$

For more details about the thickness effect, see Reference [36].

**Table 2 — Maximal usable factor on fatigue resistance at different wall thickness, *t*, and transition radius, *r*, for butt welds**

| Transition radius | Wall thickness | | | |
|---|---|---|---|---|
| *r* mm | *t* mm | | | |
| | 6 | 12 | 25 | 50 |
| 0,2 | 1,19 | 1,03 | 1,00 | 0,87 |
| 0,3 | 1,25 | 1,09 | 1,00 | 0,87 |
| 0,5 | 1,33 | 1,16 | 1,00 | 0,87 |
| 1 | 1,45 | 1,26 | 1,09 | 0,95 |
| 2 | 1,58 | 1,38 | 1,19 | 1,04 |
| 3 | 1,66 | 1,45 | 1,25 | 1,09 |

**Table 3 — Maximal usable FAT levels on fatigue resistance at different wall thickness, *t*, and transition radius, *r*, for butt welds**

| Transition radius | Wall thickness | | | |
|---|---|---|---|---|
| *r* mm | *t* mm | | | |
| | 6 | 12 | 25 | 50 |
| 0,2 | 100 | 90 | 90 | 71 |
| 0,3 | 112 | 90 | 90 | 71 |
| 0,5 | 112 | 100 | 90 | 71 |
| 1 | 125 | 112 | 90 | 80 |
| 2 | 140 | 112 | 100 | 90 |
| 3 | 140 | 125 | 112 | 90 |
| NOTE FAT values always take the next lower level when the calculated value is in between the steps. | | | | |

### 6.2.2.3 Toe radius in fillet welds

The effect of the toe radius is directly covered by the effective notch and fracture mechanics method. This effect is not covered in the nominal and structural hot spot stress method, and thus should be assessed by the use of Table 4. The IIW fatigue resistance is FAT 63, 71 or 80 depending on the type of fillet joint. Table 4 shows the relative factor on fatigue resistance at different wall thicknesses and transition radii, where the basic FAT value corresponds to 100 % or a factor 1,00 for a thickness of 25 mm, taken from the thickness effect. The table is applicable for the nominal stress approach and translated data to a basic FAT 80 is given in Table 5, note that $r/t$ > 0,02 see Reference [29]. The tables also have assumed a "thinness" effect although this needs to be verified by tests.

© ISO 2017 – All rights reserved

Documents
Document Sharing Hub
Full document details: PD ISO/TS 20273:2017

The assessment of the toe radius may be done after Reference [29]. The used exponent for the effect of radius, *r*, was taken as 0,125 mm and that on wall thickness, *t*, as 0,3 (see Table 4 and Table 5):

$$\Delta\sigma \propto \left(\frac{r}{t}\right)^{0,125} \text{ and } \Delta\sigma \propto \left(\frac{25}{t}\right)^{0,3}$$

**Table 4 — Maximal usable factor on fatigue resistance at different wall thickness, *t*, and transition radius, *r*, for fillet welds**

| Transition radius | Wall thickness | | | |
|---|---|---|---|---|
| *r* mm | *t* mm | | | |
| | 6 | 12 | 25 | 50 |
| 0,2 | 1,37 | 1,11 | 1,00 | 0,81 |
| 0,3 | 1,44 | 1,17 | 1,00 | 0,81 |
| 0,5 | 1,53 | 1,25 | 1,00 | 0,81 |
| 1 | 1,67 | 1,36 | 1,09 | 0,89 |
| 2 | 1,82 | 1,48 | 1,19 | 0,97 |
| 3 | 1,92 | 1,56 | 1,25 | 1,02 |
| NOTE FAT values always take the next lower level when the calculated value is in between the steps. | | | | |

**Table 5 — Maximal usable FAT levels (using a basic FAT 80 fillet joint) on fatigue resistance at different wall thickness, *t*, and transition radius, *r*, for fillet welds**

| Transition radius | Wall thickness | | | |
|---|---|---|---|---|
| *r* mm | *t* mm | | | |
| | 6 | 12 | 25 | 50 |
| 0,2 | 100 | 80 | 80 | 63 |
| 0,3 | 112 | 90 | 80 | 63 |
| 0,5 | 112 | 100 | 80 | 63 |
| 1 | 125 | 100 | 80 | 71 |
| 2 | 140 | 112 | 90 | 71 |
| 3 | 140 | 125 | 100 | 80 |
| NOTE FAT values always take the next lower level when the calculated value is in between the steps. | | | | |

The factors given in the Table 4 and Table 5 are theoretical values. The usable fatigue strength may be limited by the effect of various weld imperfections. This is applicable especially for thin wall thicknesses and in relation to the weld width (see also References [1] and [36]).

### 6.2.3 Effect of misalignment

#### 6.2.3.1 General

Misalignment in axially loaded joints leads to an increase of stress in the welded joint due to the occurrence of secondary shell bending stresses. The resulting stress is calculated by stress analysis or by using the formulae for the stress magnification factor $k_m$. It can easily be seen that misalignment is a very important factor in fatigue.


© ISO 2017 – All rights reserved
Documents
Document Sharing Hub
Full document details: PD ISO/TS 20273:2017