PD ISO/TS 21002:2021

BSI Standards Publication

Road vehicles — Multidimensional measurement and coordinate systems definition

Documents
Document Sharing Hub

Full document details: PD ISO/TS 21002:2021

National foreword

This Published Document is the UK implementation of ISO/TS 21002:2021.

The UK participation in its preparation was entrusted to Technical Committee AUE/7, Automobile occupant restraint systems.

A list of organizations represented on this committee can be obtained on request to its committee manager.

Contractual and legal considerations

This publication has been prepared in good faith, however no representation, warranty, assurance or undertaking (express or implied) is or will be made, and no responsibility or liability is or will be accepted by BSI in relation to the adequacy, accuracy, completeness or reasonableness of this publication. All and any such responsibility and liability is expressly disclaimed to the full extent permitted by the law.

This publication is provided as is, and is to be used at the recipient's own risk.

The recipient is advised to consider seeking professional guidance with respect to its use of this publication.

This publication is not intended to constitute a contract. Users are responsible for its correct application.

This publication is not to be regarded as a British Standard.

© The British Standards Institution 2021
Published by BSI Standards Limited 2021

ISBN 978 0 539 16694 1

ICS 43.020

Compliance with a Published Document cannot confer immunity from legal obligations.

This Published Document was published under the authority of the Standards Policy and Strategy Committee on 31 August 2021.

Amendments/corrigenda issued since publication

Date	Text affected

Documents
Document Sharing Hub

Full document details: PD ISO/TS 21002:2021

TECHNICAL SPECIFICATION

ISO/TS 21002

First edition
2021-07

Road vehicles — Multidimensional measurement and coordinate systems definition

Véhicules routiers — Mesurage multidimensionnel et définition des systèmes de coordination

Reference number
ISO/TS 21002:2021(E)

Documents
Document Sharing Hub

© ISO 2021

Full document details: PD ISO/TS 21002:2021

COPYRIGHT PROTECTED DOCUMENT

© ISO 2021

All rights reserved. Unless otherwise specified, or required in the context of its implementation, no part of this publication may be reproduced or utilized otherwise in any form or by any means, electronic or mechanical, including photocopying, or posting on the internet or an intranet, without prior written permission. Permission can be requested from either ISO at the address below or ISO's member body in the country of the requester.

ISO copyright office
CP 401 • Ch. de Blandonnet 8
CH-1214 Vernier, Geneva
Phone: +41 22 749 01 11
Email: copyright@iso.org
Website: www.iso.org

Published in Switzerland

© ISO 2021 – All rights reserved

Documents
Document Sharing Hub

Full document details: PD ISO/TS 21002:2021

Contents

Page

Foreword ..... **iv**
Introduction ..... **v**
1 Scope **1**
2 Normative references **1**
3 Terms and definitions **1**
4 Symbols **6**
5 Sensor calibration **10**
6 Procedures zero-position verification **10**
6.1 General 10
6.2 Verification acceptance limits 10
6.3 Zero-position data collection 11
6.4 Calculations 15
6.5 Zero-position verification with DAS parameters implemented 16
7 Coordinate system transformation **17**
7.1 Conditions 17
7.2 Sensor data processing spherical to orthogonal coordinate system 17
Annex A (informative) **Measurement orthogonal coordinate systems** **19**
Annex B (informative) **Zero-position fixture and data collection examples** **26**
Annex C (informative) **Mathematical background data processing** **37**
Annex D (informative) **Applicable sensors** **42**
Annex E (informative) **Suggestions for generic workflow - parameter implementation in data acquisition systems and verification of post processing software** **43**
Annex F (informative) **ISO MME code examples** **47**
Annex G (informative) **Expected outputs multidimensional sensors mounted in dummy** **49**
Bibliography **52**

© ISO 2021 – All rights reserved

Documents
Document Sharing Hub
Full document details: PD ISO/TS 21002:2021

Foreword

ISO (the International Organization for Standardization) is a worldwide federation of national standards bodies (ISO member bodies). The work of preparing International Standards is normally carried out through ISO technical committees. Each member body interested in a subject for which a technical committee has been established has the right to be represented on that committee. International organizations, governmental and non-governmental, in liaison with ISO, also take part in the work. ISO collaborates closely with the International Electrotechnical Commission (IEC) on all matters of electrotechnical standardization.

The procedures used to develop this document and those intended for its further maintenance are described in the ISO/IEC Directives, Part 1. In particular, the different approval criteria needed for the different types of ISO documents should be noted. This document was drafted in accordance with the editorial rules of the ISO/IEC Directives, Part 2 (see www.iso.org/directives).

Attention is drawn to the possibility that some of the elements of this document may be the subject of patent rights. ISO shall not be held responsible for identifying any or all such patent rights. Details of any patent rights identified during the development of the document will be in the Introduction and/or on the ISO list of patent declarations received (see www.iso.org/patents).

Any trade name used in this document is information given for the convenience of users and does not constitute an endorsement.

For an explanation of the voluntary nature of standards, the meaning of ISO specific terms and expressions related to conformity assessment, as well as information about ISO's adherence to the World Trade Organization (WTO) principles in the Technical Barriers to Trade (TBT), see www.iso.org/iso/foreword.html.

This document was prepared by Technical Committee ISO/TC 22, *Road Vehicles*, Subcommittee SC 36, *Safety aspects and impact testing*.

Any feedback or questions on this document should be directed to the user's national standards body. A complete listing of these bodies can be found at www.iso.org/members.html.

© ISO 2021 – All rights reserved
Documents
Document Sharing Hub
Full document details: PD ISO/TS 21002:2021

Introduction

This document provides a unified method to handle and process various types of multidimensional displacement sensors for use in crash dummies and automotive crash testing. The content covers existing sensors and dummies, but the document also offers a generic method to handle future new dummies and/or sensors.

Multidimensional measurement systems are used in crash dummies (ATD, or anthropomorphic test device) to monitor the position of dummy features (e.g. ribs, abdomen, etc.) for injury assessment. The dummy feature position is typically expressed in an orthogonal coordinate system which is fixed to the thoracic spine of the dummy, see Annex A. The systems covered in this document are an assembly of one distance sensor and one or two angle sensors, the axes of which are organised in a (rotating) spherical coordinate system, see Figure C.1. Other 2- and 3-dimensional position measurement systems are outside the scope of this document. Although in this document a suit of ATD's and their features are discussed to explain the methodology, its scope is not limited to these examples and can be applied to any other ATD and its features.

© ISO 2021 – All rights reserved

Documents
Document Sharing Hub
Full document details: PD ISO/TS 21002:2021

Documents
Document Sharing Hub

Road vehicles — Multidimensional measurement and coordinate systems definition

1 Scope

This document defines the measurement coordinate systems and presents the protocol to determine the sensor offsets to the chosen coordinate system. Finally, the method is presented how to process the sensor spherical coordinate system data to calculate the position of a dummy feature in three-dimensional space in the defined local orthogonal coordinate system.

2 Normative references

There are no normative references in this document.

3 Terms and definitions

For the purposes of this document, the following terms and definitions apply.

ISO and IEC maintain terminology databases for use in standardization at the following addresses:

— ISO Online browsing platform: available at https://www.iso.org/obp

— IEC Electropedia: available at https://www.electropedia.org/

3.1
multidimensional measurement system
system that measures spatial position of a crash dummy feature (e.g. rib, abdomen, etc.) with respect to a defined reference feature (e.g. dummy spine) and its local coordinate system origin.

Note 1 to entry: Examples of multidimensional sensors and applications are given in the NOTES of Figure 1, Figure 2 and Figure 3.

3.2
radius
distance between the centre of rotation at spine interface and centre of rotation at feature interface (e.g. dummy rib)

Note 1 to entry: The parameter radius (R) is associated with the ISO MME Code DC for Distance, ISO/TS 13499[2].

3.3
sensor Y-angle
angle of the multidimensional sensor along Y-axis with respect to local orthogonal coordinate system

Note 1 to entry: The positive rotation direction is defined following SAE sign convention right hand rule.

3.4
sensor Z-angle
angle of the multidimensional sensor along Z-axis with respect to local orthogonal coordinate system

Note 1 to entry: The positive rotation direction is defined following SAE sign convention right hand rule.

Note 2 to entry: Examples of the angle definitions are given in the NOTES of Figure 1, Figure 2 and Figure 3.

© ISO 2021 – All rights reserved

Documents
Document Sharing Hub
Full document details: PD ISO/TS 21002:2021

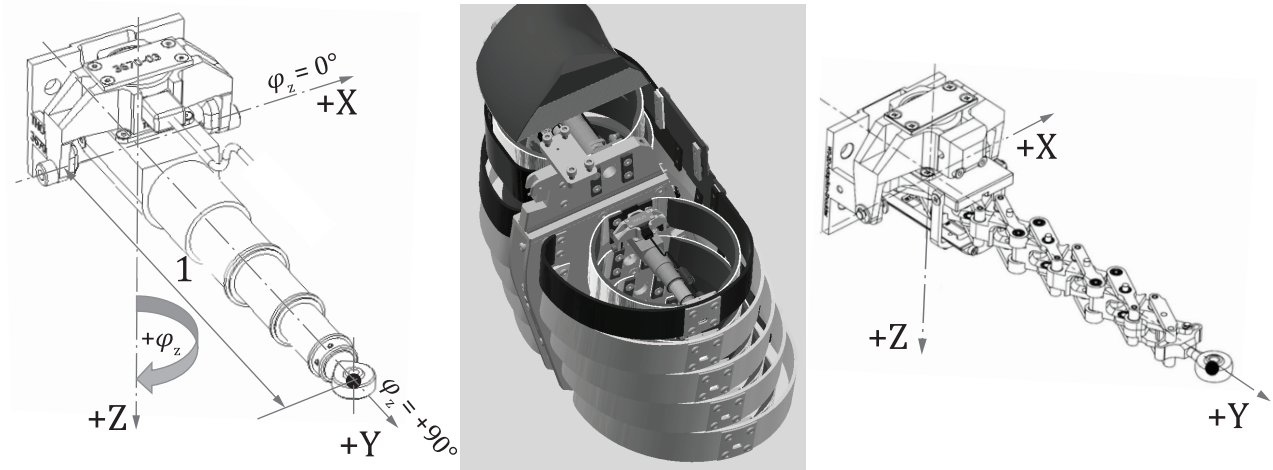

Key

1 radius, R_i

NOTE Two examples for WorldSID application are shown: left image 2D IR-TRACC, right image S-Track.

Figure 1 — Two-dimensional sensor mounted in right-hand side WorldSID 50M dummy

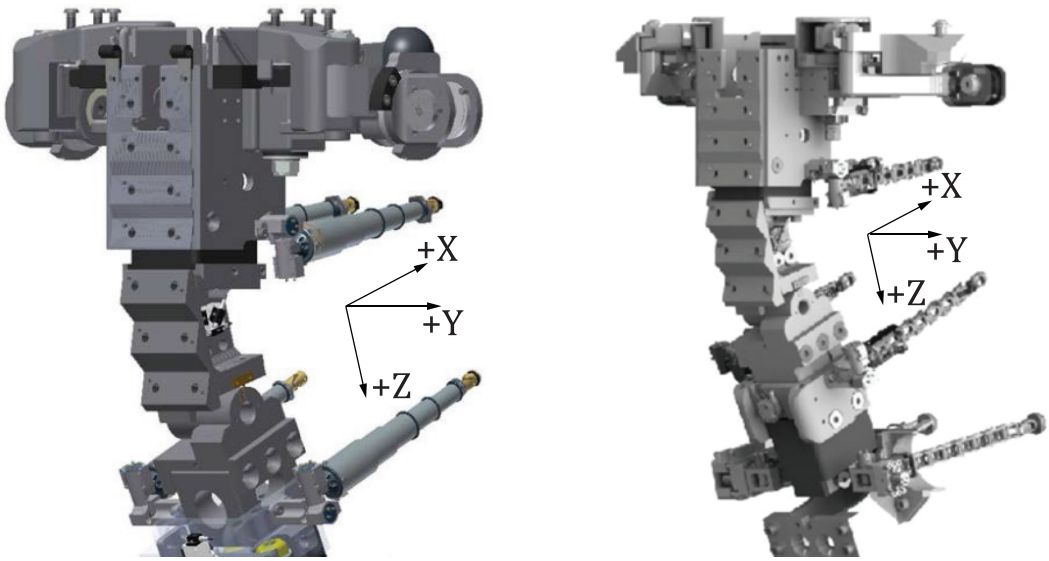

NOTE Two examples for THOR application are show: left image IR-TRACC, right image S-Track.

Figure 2 — Three-dimensional sensors mounted in THOR 50M right-hand view and global coordinate system.

© ISO 2021 – All rights reserved
Documents
Document Sharing Hub
Full document details: PD ISO/TS 21002:2021

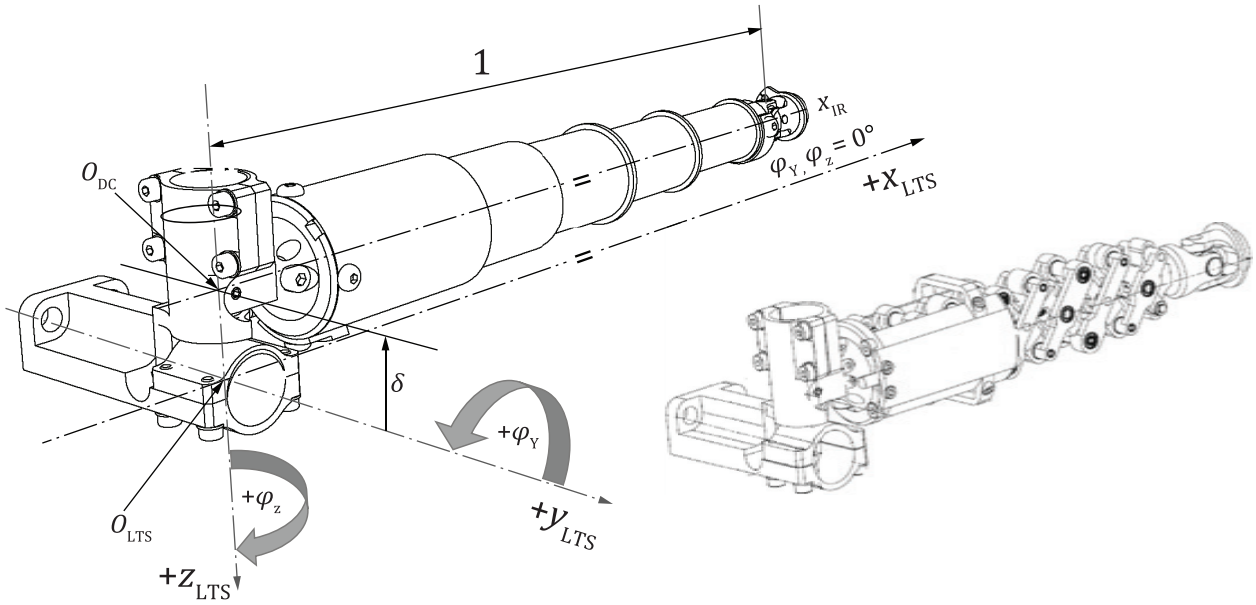

Key

1 radius, R_i

NOTE Two informative examples for THOR application are shown: left image 3D IR-TRACC, right image 3D S-Track).

Figure 3 — Three-dimensional sensors for THOR lower right-hand thorax and their local orthogonal coordinate system

3.5
zero-position
condition of multidimensional sensor when mounted by the spine interface and the distance sensor is aligned with (parallel to) the local orthogonal coordinate system axes and the feature interface is fixed at an accurately defined distance from the coordinate system origin

Note 1 to entry: By definition the angles of the multidimensional position sensor are zero.

3.6
zero-position fixture
tool to set up a multidimensional position sensor in its *zero-position* (3.5)

Note 1 to entry: A zero-position fixture has accurately machined reproducible mountings to simulate the dummy spine and the feature mountings. These sensor mountings of the fixture are accurately positioned in (2D- and 3D) space such that the sensor is in its zero-position condition, called position 0 (position zero). The fixture has additional mounting positions for the feature interface, which are translated from zero position over a defined distance in a direction perpendicular to the distance sensor axis and parallel to at least one of the local orthogonal coordinate system axes.

Note 2 to entry: The fixture is considered adequately accurate if the overall dimensional tolerance stack ups of the sensor mountings are within ±0,3mm in all directions.

Note 3 to entry: Examples of 2D and 3D zero-position fixtures are given in Annex B.

Note 4 to entry: The zero-position fixtures are used in subsequent steps of the zero-position verification procedure:

a) to find the offset of the sensors with respect to the local orthogonal coordinate system;

b) to remove offsets (by adjustment or compensation in a data acquisition system);

c) to check if sensor offsets are removed with a live data acquisition system;

© ISO 2021 – All rights reserved

Documents
Document Sharing Hub
Full document details: PD ISO/TS 21002:2021

d) to check sensor polarities with respect to global orthogonal coordinate system;

e) to check if calculations for coordinate system transformation are reproducing the design positions of the fixture in 2D or 3D space. See paragraph 7 and Annex B.

3.7
offset angle
output in degrees of the angle sensor(s) when the multidimensional position sensor is in its *zero-position* (3.5) condition

Note 1 to entry: If the angle sensor has a positive offset according to the local orthogonal coordinate system, the offset angle is defined positive.

3.8
orientation angle
correction angle for multidimensional sensors that can be mounted in sensor orientation for left hand and right-hand side impact operation, as well as for frontal impact operation

Note 1 to entry: Typically the two-dimensional sensors can be mounted in various orientations inside the dummy. In side impact dummies the sensors can be set up for left hand and right-hand impact (even simultaneously), and the Q10 child dummies can be set up for both frontal and lateral impacts.

Note 2 to entry: The two-dimensional sensors can be oriented inside the dummy with a rotated coordinate system about the Z-axis. The orientation angle can be implemented in Data Acquisition Systems Z-angle data channels as a fixed offset to correct for a rotated coordinate system, see Table 1.

Table 1 — Orientation angle definition per orientation in the dummy

	Sensor orientation for impact operation		
	Left Lateral	**Frontal**	**Right Lateral**
Orientation angle	-90°	0°	+90°

3.9
reference angle
orientation angle minus the *offset angle* (3.7)

Note 1 to entry: Calculate the reference angle with Formula (1).

$$\varphi_{REF} = \varphi_{ORIENT} - \varphi_{OSZ} \quad (1)$$

Note 2 to entry: The reference angle can be used with data acquisition systems that can handle only one fixed offset parameter, see example in Figure 4.

© ISO 2021 – All rights reserved
Documents
Document Sharing Hub
Full document details: PD ISO/TS 21002:2021

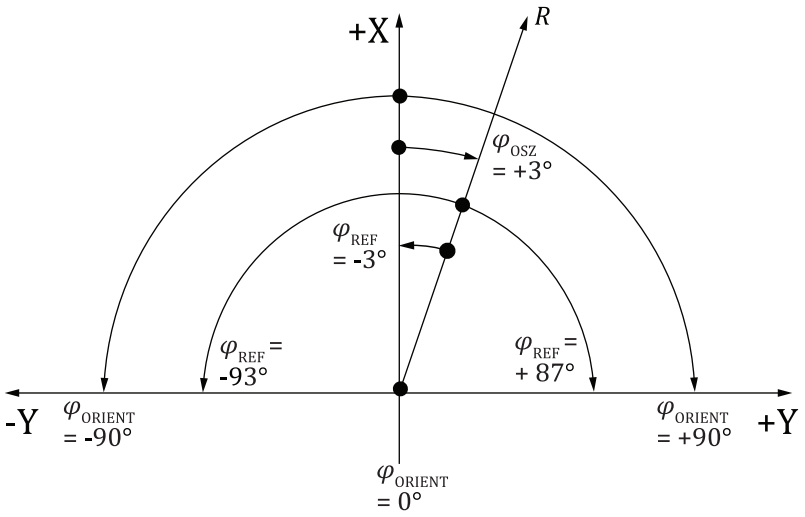

Figure 4 — Angle sensor parameter examples seen from top of dummy (looking over dummy shoulder)

Table 2 — Examples for φ_{REF} and φ_{ORIENT} when offset angle is +3°, for left side, frontal and right-side impact dummy set up, see Figure 4

	Left lateral impact	Frontal impact	Right lateral impact
φ_{ORIENT}	-90	0	+90
φ_{OSZ}	+3	+3	+3
φ_{REF}	-93	-3	+87

3.10
angle sensor polarity
direction of rotation of the sensor shaft with reference to its fixed body in relation to its electrical (digital) signal output and sensor body and shaft orientation to the relevant coordinate system

Note 1 to entry: The polarity is defined positive when the far end of the shaft points in the positive orthogonal direction and the shaft (or internal wiper) is rotated in the positive rotation direction according to the relevant coordinate system, see example Figure 5.

Note 2 to entry: The value of the polarity can only be +1 or -1.

Note 3 to entry: Depending of the sensor assembly orientation in the dummy some sensors need to change the polarity sign to get a positive output in accordance with the relevant coordinate system.

© ISO 2021 – All rights reserved

Documents
Document Sharing Hub
Full document details: PD ISO/TS 21002:2021

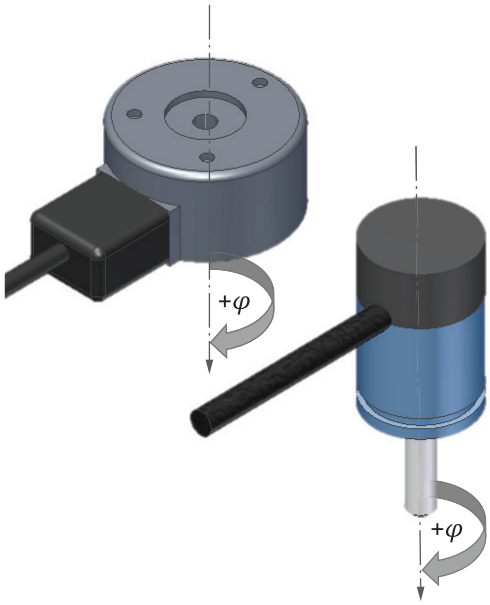

Figure 5 — Positive polarity for angle sensors

4 Symbols

Table 3 — List of symbols

Parameter	Symbol	Unit	Definition/description	Application
X-axis	x	-	Global orthogonal coordinate system X-axis	
Y-axis	y	-	Global orthogonal coordinate system Y-axis	
Z-axis	z	-	Global orthogonal coordinate system Z-axis	
Origin of local orthogonal coordinate systems	O_{UTS} O_{LTS} O_{LS} O_{DC}	-	Origin upper thoracic spine Origin lower thoracic spine Origin lumbar spine Origin distance sensor	
	x_{UTS}	-	Local X-axis upper thoracic spine	3D-THOR
	y_{UTS}	-	Local Y-axis upper thoracic spine	3D-THOR
	z_{UTS}	-	Local Z-axis upper thoracic spine	3D-THOR
	x_{DC}	-	Distance sensor axis	3D-THOR
	y_{DC}		Position sensor Y-pivot axis	3D-THOR
	z_{DC}	-	Position sensor Z-pivot axis	3D-THOR
	x_{LTS}	-	Local X-axis lower thoracic spine	3D-THOR
	y_{LTS}	-	Local Y-axis lower thoracic spine	3D-THOR
	z_{LTS}	-	Local Z-axis lower thoracic spine	3D-THOR
	x_{LS}	-	Local X-axis lumbar spine	3D-THOR
	y_{LS}	-	Local Y-axis lumbar spine	3D-THOR
	z_{LS}	-	Local Z-axis lumbar spine	3D-THOR

© ISO 2021 – All rights reserved
Documents
Document Sharing Hub
Full document details: PD ISO/TS 21002:2021

Table 3 *(continued)*

Parameter	Symbol	Unit	Definition/description	Application
Distance Distance position 0 Distance position 1 Distance position 2	D D_{ZERO} D_{P1} D_{P2}	mm	Design distance on zero-position fixture from 2D sensor origin to rib interface centre in position-0, position-1, position-2	2D
Distance positions ZERO-L, ZERO-R, PZL, PZR, PYL, PYR PYZL, PYZR	 D_{ZERO} D_{PZ} D_{PY} D_{PYZ}	mm	Design distance on zero-position fixture from origin O_{UTS}, O_{LTS}, or O_{LS} to rib interface centre in position ZERO, position PZ (L and R), position PY (L and R), position PYZ (L and R)	3D
Z-angle Angle position 0 Angle position 1 Angle position 2	Θ_Z $\Theta_{Z\ ZERO}$ Θ_{Z1} Θ_{Z2}	degrees	Design Z-angles on zero-position fixture 2D sensor origin to rib interface centre in zero-position, position-1, position-2	2D
Y-angle positions ZERO-L, ZERO-R, PZL PZR, PYL, PYR PYZL, PYZR	Θ_Y $\Theta_{Y\ ZERO}$ $\Theta_{Y\ PZ}$ $\Theta_{Y\ PY}$ $\Theta_{Y\ PYZ}$	degrees	Design Y-angles on zero-position fixture origin O_{UTS}, O_{LTS}, or O_{LS} to rib interface centre in position ZERO, position PZ (L and R) , position PY (L and R), position PYZ (L and R)	3D
Z-angle positions ZERO-L, ZERO-R, PZL PZR, PYL, PYR PYZL, PYZR	Θ_Z $\Theta_{Z\ ZERO}$ $\Theta_{Z\ PZ}$ $\Theta_{Z\ PY}$ $\Theta_{Z\ PYZ}$	degrees	Design Z-angles on zero-position fixture origin O_{UTS}, O_{LTS}, or O_{LS} to rib interface centre in position ZERO, position +Z, position +Y, position PYZ (L and R)	3D
Calibration range	d_E	mm	Distance between starting and end point of displacement calibration	
Distance sensor output	U_{DC}	V, LSB	Distance sensor output	
Tubes-IN output	$U_{DC\ IN}$	V, LSB	Output at certain displacement with all floating tubes pushed IN	IR-TRACC only
Tubes-OUT output	$U_{DC\ OUT}$	V, LSB	Output at certain displacement with all floating tubes pushed OUT	IR-TRACC only
Linearization exponent	EXP	[-]	Optimized linearization exponent	IR-TRACC only
Linearized voltage	U_{LIN}	V_{LIN} LSB_{LIN}	IR-TRACC output to power of exponent; calculated parameter	IR-TRACC only
Distance sensor calibration factor	C_{DC}	mm/V and mm/LSB mm/V_{LIN} mm/LSB_{LIN}	linear sensor mm displacement per output IR-TRACC mm displacement per linearized output	Ratiometric sensor IR-TRACC
Distance sensor sensitivity	S_{DC}	V/mm and LSB/mm V_{LIN} /mm and LSB_{LIN} /mm	linear sensor output per mm displacement IR-TRACC linearized output per mm displacement	Ratiometric sensor IR-TRACC
Angle sensor calibration factor	C_{ANY} C_{ANZ}	degrees/V/V degrees/LSB	Angle sensor degrees rotation at 1V output per 1V excitation or degree rotation per digital output	

© ISO 2021 – All rights reserved

Documents
Document Sharing Hub
Full document details: PD ISO/TS 21002:2021

Table 3 *(continued)*

Parameter	Symbol	Unit	Definition/description	Application
Angle sensor sensitivity	S_{ANY} S_{ANZ}	V/V/degrees LSB/degrees	Angle sensor output per degree rotation at 1V excitation or digital output per degree	
Angle sensor polarity	P	[-]	The value can be either +1 or -1	2D-3D
Distance sensor Pos0 output	U_{DC0}	V, LSB	Distance sensor average output at zero position on Zeroing Fixture	2D-3D
Distance sensor Pos0 output tubes-IN	$U_{DC0\ IN}$	V, LSB	Distance sensor output at zero position tubes IN	IR-TRACC
Distance sensor Pos0 output tubes-OUT	$U_{DC0\ OUT}$	V, LSB	Distance sensor output at zero position tubes OUT	IR-TRACC
Distance sensor Pos1 output	U_{DC1}	V, LSB	Distance sensor output at position 1	2D
Distance Sensor Pos2 output	U_{DC2}	V, LSB	Distance sensor output at position 2	2D
Distance sensor output position PY	$U_{DC\ PY}$	V, LSB	Distance sensor output at position PY	3D
Distance sensor output position PZ	$U_{DC\ PZ}$	V, LSB	Distance sensor output at position PZ	3D
Distance sensor output position PYZ	$U_{DC\ PYZ}$	V, LSB	Distance sensor output at position PYZ	3D
Radius	R R_0 R_i	mm	Distance from O_{DC} to rib interface rotation centre, see Figure 3. Distance sensor output in mm at t_0, at t_i.	2D 3D
Radius Pos0	R_{IO}	mm	Radius at zero position on zeroing fixture calculated using average IN-OUT output	2D-3D
Radius Pos0 tubes-IN	R_{IN}	mm	Radius at zero position calculated using tubes IN output	IR-TRACC
Radius Pos0 tubes-OUT	R_{OUT}	mm	Radius at zero position calculated using tubes OUT output	IR-TRACC
Radius Pos0	R_{ZERO}	mm	Radius at zero-position	2D-3D
Radius Pos1	R_1		Radius at position-1	2D
Radius Pos2	R_2		Radius at position-2	2D
Radius PY	R_{PY}		Radius at position PY	3D
Radius PZ	R_{PZ}		Radius at position PZ	3D
Radius PYZ	R_{PYZ}		Radius at position PYZ	3D
Excitation	U_{EX}	V	Excitation voltage angle sensor during zero-position verification	
Y-angle sensor output	U_{ANY}	V, LSB	Y-axis angle sensor voltage	3D
Z-angle sensor output	U_{ANZ}	V, LSB	Z-axis angle sensor voltage	
Z-Angle output 0 (ZERO)	U_{ANZ0}	V, LSB	Z-Angle sensor average output at position-0 (ZERO)	2D & 3D
Z-Angle output 0-Near	$U_{ANZ\ NEAR}$	V, LSB	Z-Angle sensor output at position-0 pull Near (3D away from spine)	2D & 3D
Z-Angle output 0-Far	$U_{ANZ\ FAR}$	V, LSB	Z-Angle sensor output at position-0 pull Far (3D towards spine)	2D & 3D

© ISO 2021 – All rights reserved
Documents
Document Sharing Hub
Full document details: PD ISO/TS 21002:2021

Table 3 *(continued)*

Parameter	Symbol	Unit	Definition/description	Application
Z-Angle output 1	U_{ANZ1}	V, LSB	Z-axis angle sensor output at position-1	2D
Z-Angle output 2	U_{ANZ2}	V, LSB	Z-axis angle sensor output at position-2	2D
Z-Angle output PZR	$U_{ANZ\,PZ}$	V, LSB	Z-Angle sensor output at position PZ	3D
Y-Angle output zero	U_{ANY0}	V, LSB	Y- Angle sensor average output at position-zero	3D
Y-Angle output zero-Down	$U_{ANY\,DOWN}$	V, LSB	Y- Angle sensor output at position-zero pull Down	3D
Y-Angle output zero-Up	$U_{ANY\,UP}$	V, LSB	Y- Angle sensor output at position-0 pull Up	3D
Y-Angle output PY	$U_{ANY\,PY}$	V, LSB	Y-Angle sensor output at position PY	3D
Y-Offset Angle	φ_{OSY}	degrees	Y-angle sensor average offset between extremes (Up-Down) when at fixture zero-position	
Z-Offset Angle	φ_{OSZ}	degrees	Z-angle sensor average offset between extremes (Near-Far) when at fixture zero-position	
Sensor Y-angle	φ_{Y} φ_{Y0} φ_{Yi}	degrees	Distance sensor angle along y-axis with respect to local orthogonal coordinate system, see Figure 3, and at t_0 and at t_i.	
Sensor Z-angle	φ_{Z} φ_{Z0} φ_{Zi}	degrees	Distance sensor angle along z-axis with respect to local orthogonal coordinate system, see Figure 3, and, at t_0 and at t_i.	
Distance intercept	I_{DC}	mm	Distance sensor offset in mm from coordinate system origin.	
Distance intercept voltage	I_{DCV}	V, V_{LIN} LSB_{LIN}	Calculated (linearized) output at 0mm radius	
Axis offset	δ	mm	Mechanical offset distance between O_{DC} distance sensor origin and coordinate system origin, see Figure 3.	3D thoracic
Orientation angle	φ_{ORIENT}	degrees	Orientation angle of 2D position sensor assembled inside dummy. For definition see also Figure 4 and Table 1.	2D
Reference angle	φ_{REF}	degrees	Orientation angle minus offset angle. For definition see also Figure 4 and Table 1.	2D
Time	t t_0 t_i	s	time time zero, start of the test time i	
x coordinate	x, x_0, x_i	mm	Feature interface rotation centre x-coordinate, x at t_0, x at t_i, see NOTES of Figure 1, Figure 2 and Figure 3.	
y coordinate	y, y_0, y_i	mm	Feature interface rotation centre y-coordinate, y at t_0, y at t_i , see NOTES of Figure 1, Figure 2 and Figure 3.	
z coordinate	z, z_0, z_i	mm	Feature interface rotation centre z-coordinate, z at t_0, z at t_i , see NOTES of Figure 1, Figure 2 and Figure 3.	

© ISO 2021 – All rights reserved

Documents
Document Sharing Hub
Full document details: PD ISO/TS 21002:2021

Table 3 *(continued)*

Parameter	Symbol	Unit	Definition/description	Application
x deflection	Dx_i	mm	Feature deflection in *x* direction at t_i	
y deflection	Dy_i	mm	Feature deflection in *y* direction at t_i	
z deflection	Dz_i	mm	Feature deflection in *z* direction at t_i	
Resultant deflection	D_i	mm	Resultant deflection of the feature interface centre at t_i	

5 Sensor calibration

Individual angle and displacement or distance sensors are calibrated according to accepted standards before conducting the zero-position verification procedure. (Recommended: calibrate non-linear Infrared distance sensor IR-TRACC[3] according to ISO/TS 21476[4] and calibrate ratio metric distance sensor according to ISO/TS 23521[5]).

6 Procedures zero-position verification

6.1 General

This clause describes procedures to obtain reproducible data from multidimensional position sensors on zero-position fixtures. Example sensors and fixtures are used in the procedures to describe the method, but the procedures should also be applicable to other sensors and fixtures. The sequences for 2D and 3D zero-position verification are generally following the same principle.

6.2 Verification acceptance limits

The acceptance limits of the zero-position verification procedure are based on an uncertainty analysis conducted according to procedures outlined in JCGM_100_2008[6] applying four components of variation. The components identified are

a) variation introduced by the operator (assembly of the sensor on the fixture, system play in the mountings),

b) imperfection of the sensor, like system play, friction and non-linearity,

c) voltage measurement uncertainty, and

d) manufacturing tolerances of fixtures.

To quantify the operator component of variation a round robin was conducted in 2018-2019, involving one 2D sensor and fixture and one 3D sensor and fixture. The round robin included eleven qualified test labs on three continents. The other three components of uncertainty, b), c), and d), were accounted for in the uncertainty analysis based on the specifications of the equipment used. The total uncertainty was calculated from the square root of the sum of squares of standard deviation, σ, of the four components, and a multiplier of three was applied to define acceptance limits ($3\sigma \equiv 99{,}7$ % confidence limits). The verification acceptance limits are defined based on these studies as follows:

— For angles: ±3 % of mechanical range of ±45°: ±1,35°. (Example max error: with distance sensor at 140mm radius, 1,35° corresponds to 1,35π/180 × 140 = 3,3mm).

— For distance: ±3 % of calibration range of distance sensor. (Example max error: calibration range 80mm, 3 % corresponds to 2,4mm).

© ISO 2021 – All rights reserved
Documents
Document Sharing Hub
Full document details: PD ISO/TS 21002:2021

6.3 Zero-position data collection

Zero-position verification data collection sequences are given in Table 4 for 2D sensors and Table 5 for 3D sensors. The sensors are connected to measurement systems according adequate and accepted laboratory practise standards to measure the sensor outputs.

The zero-position verification procedure are conducted in a temperature controlled environment between 20 °C to 25 °C.

A 120 s warm up time after powering the sensors is observed before data collection starts.

The sensor assembly are setup on the zero position fixture in its zero position. Measurements and calculations are conducted according to the sequences given in Table 4 and Table 5 and formulae given in 6.4. Measurements taken under conditions of controlled lateral loading to find the extreme sensor offsets are conducted with a ballast 0,44 kg to 0,47kg; finally the rib interface are manipulated in multiple positions to verify the sensor polarities and pass criteria are applied for the expected sensor outputs in these positions. See also Annex B for example fixtures and data collection examples.

© ISO 2021 – All rights reserved

Documents
Document Sharing Hub
Full document details: PD ISO/TS 21002:2021