PD ISO/TS 21219-5:2015

BSI Standards Publication

Intelligent transport systems — Traffic and travel information (TTI) via transport protocol experts group, generation 2 (TPEG2)

Part 5: Service framework (TPEG2-SFW)

Documents
Document Sharing Hub

Full document details: PD ISO/TS 21219-5:2015

National foreword

This Published Document is the UK implementation of ISO/TS 21219-5:2015.

The UK participation in its preparation was entrusted to Technical Committee EPL/278, Intelligent transport systems.

A list of organizations represented on this committee can be obtained on request to its secretary.

This publication does not purport to include all the necessary provisions of a contract. Users are responsible for its correct application.

© The British Standards Institution 2016.
Published by BSI Standards Limited 2016

ISBN 978 0 580 73216 4
ICS 03.220.01; 35.240.60

Compliance with a British Standard cannot confer immunity from legal obligations.

This Published Document was published under the authority of the Standards Policy and Strategy Committee on 31 December 2016.

Amendments/corrigenda issued since publication

Date	Text affected

Documents
Document Sharing Hub

Full document details: PD ISO/TS 21219-5:2015

TECHNICAL SPECIFICATION

ISO/TS 21219-5

First edition
2015-03-01

Intelligent transport systems - Traffic and travel information (TTI) via transport protocol experts group, generation 2 (TPEG2) —

Part 5:
Service framework (TPEG2-SFW)

Systèmes intelligents de transport — Informations sur le trafic et le tourisme via le groupe expert du protocole de transport, génération 2 (TPEG2) —

Partie 5: Cadre de service (TPEG2-SFW)

Reference number
ISO/TS 21219-5:2015(E)

Documents
Document Sharing Hub

© ISO 2015

Full document details: PD ISO/TS 21219-5:2015

COPYRIGHT PROTECTED DOCUMENT

© ISO 2015

All rights reserved. Unless otherwise specified, no part of this publication may be reproduced or utilized otherwise in any form or by any means, electronic or mechanical, including photocopying, or posting on the internet or an intranet, without prior written permission. Permission can be requested from either ISO at the address below or ISO's member body in the country of the requester.

ISO copyright office
Case postale 56 • CH-1211 Geneva 20
Tel. + 41 22 749 01 11
Fax + 41 22 749 09 47
E-mail copyright@iso.org
Web www.iso.org

Published in Switzerland

© ISO 2015 – All rights reserved

Documents
Document Sharing Hub

Full document details: PD ISO/TS 21219-5:2015

Contents

Page

Foreword ..... **iv**
Introduction ..... **vi**
1 Scope **1**
2 Normative references **1**
3 Terms, definitions and abbreviated terms **1**
3.1 Terms and definitions 1
3.2 Abbreviated terms 3
4 Introduction — TPEG **3**
4.1 TPEG transmission 3
4.2 TPEG roles 4
4.3 TPEG layer model 4
4.4 Design principles 6
5 Description of TPEG Multiplex and TPEG Structures **6**
5.1 Overview 6
5.2 TPEG Transport level 8
5.3 TPEG Service level 8
5.4 TPEG Service Component level 10
Annex A (normative) **TPEG-Binary Representation of Framework Structures** **12**
Annex B (normative) **tpegML Representation of Framework Structures** **19**
Annex C (normative) **SID administrative procedures** **34**
Annex D (normative) **CRC Calculation** **35**
Bibliography **37**

© ISO 2015 – All rights reserved

Documents
Document Sharing Hub
Full document details: PD ISO/TS 21219-5:2015

Foreword

ISO (the International Organization for Standardization) is a worldwide federation of national standards bodies (ISO member bodies). The work of preparing International Standards is normally carried out through ISO technical committees. Each member body interested in a subject for which a technical committee has been established has the right to be represented on that committee. International organizations, governmental and non-governmental, in liaison with ISO, also take part in the work. ISO collaborates closely with the International Electrotechnical Commission (IEC) on all matters of electrotechnical standardization.

The procedures used to develop this document and those intended for its further maintenance are described in the ISO/IEC Directives, Part 1. In particular the different approval criteria needed for the different types of ISO documents should be noted. This document was drafted in accordance with the editorial rules of the ISO/IEC Directives, Part 2 (see www.iso.org/directives).

Attention is drawn to the possibility that some of the elements of this document may be the subject of patent rights. ISO and TISA shall not be held responsible for identifying any or all such patent rights. Details of any patent rights identified during the development of the document will be in the Introduction and/or on the ISO list of patent declarations received (see www.iso.org/patents).

Any trade name used in this document is information given for the convenience of users and does not constitute an endorsement.

For an explanation on the meaning of ISO specific terms and expressions related to conformity assessment, as well as information about ISO's adherence to the WTO principles in the Technical Barriers to Trade (TBT) see the following URL: Foreword - Supplementary information

The committee responsible for this document is ISO/TC 204 *Intelligent transport systems*, in cooperation with the Traveller Information Services Association (TISA), TPEG Applications Working Group through Category A Liaison status.

ISO/TS 21219 consists of the following parts, under the general title *Intelligent transport systems — Traffic and travel information (TTI) via transport protocol expert group, generation 2 (TPEG2)*:

— *Part 2: UML modelling rules* [Technical Specification]

— *Part 3: UML to binary conversion rules* [Technical Specification]

— *Part 4: UML to XML conversion rules* [Technical Specification]

— *Part 5: Service framework* [Technical Specification]

— *Part 6: Message management container* [Technical Specification]

— *Part 7: Location referencing container* [Technical Specification]

— *Part 18: Traffic flow and prediction application* [Technical Specification]

The following parts are planned:

— *Part 1: Introduction, numbering and versions* [Technical Specification]

— *Part 9: Service and network information* [Technical Specification]

— *Part 10: Conditional access information* [Technical Specification]

— *Part 14: Parking information application* [Technical Specification]

— *Part 15: Traffic event compact application* [Technical Specification]

— *Part 16: Fuel price information application* [Technical Specification]

© ISO 2015 – All rights reserved
Documents
Document Sharing Hub
Full document details: PD ISO/TS 21219-5:2015

— *Part 19: Weather information application* [Technical Specification]

— *Part 20: Extended TMC location referencing* [Technical Specification]

— *Part 21: Geographic location referencing* [Technical Specification]

— Part 22: *OpenLR·location·referencing* [Technical Specification]

— Part 23: *Roads·and·multi-modal·routes·application* [Technical Specification]

© ISO 2015 – All rights reserved

Documents
Document Sharing Hub
Full document details: PD ISO/TS 21219-5:2015

Introduction

History

TPEG technology was originally proposed by the European Broadcasting Union (EBU) Broadcast Management Committee, who established the B/TPEG project group in the autumn of 1997 with a brief to develop, as soon as possible, a new protocol for broadcasting traffic and travel-related information in the multimedia environment. TPEG technology, its applications and service features were designed to enable travel-related messages to be coded, decoded, filtered and understood by humans (visually and/or audibly in the user's language) and by agent systems. Originally a byte-oriented data stream format, which may be carried on almost any digital bearer with an appropriate adaptation layer, was developed. Hierarchically structured TPEG messages from service providers to end-users were designed to transfer information from the service provider database to an end-user's equipment.

One year later in December 1998, the B/TPEG group produced its first EBU specifications. Two documents were released. Part 2 (TPEG-SSF, which became ISO/TS 18234-2) described the Syntax, Semantics and Framing structure, which was used for all TPEG applications. Meanwhile Part 4 (TPEG-RTM, which became ISO/TS 18234-4) described the first application, for Road Traffic Messages.

Subsequently in March 1999, CEN TC 278/WG 4, in conjunction with ISO/TC 204/WG 10, established a project group comprising members of the former EBU B/TPEG and they continued the work concurrently. Further parts were developed to make the initial set of four parts, enabling the implementation of a consistent service. Part 3 (TPEG-SNI, ISO/TS 18234-3) described the Service and Network Information Application, used by all service implementations to ensure appropriate referencing from one service source to another.

Part 1 (TPEG-INV, ISO/TS 18234-1), completed the series, by describing the other parts and their relationship; it also contained the application IDs used within the other parts. Additionally, Part 5, the Public Transport Information Application (TPEG-PTI, ISO/TS 18234-5), was developed. The so-called TPEG-LOC location referencing method, which enabled both map-based TPEG-decoders and non map-based ones to deliver either map-based location referencing or human readable text information, was issued as ISO/TS 18234-6 to be used in association with the other applications parts of the ISO/TS 18234-series to provide location referencing.

The ISO/TS 18234-series has become known as TPEG Generation 1.

TPEG Generation 2

With the inauguration of the Traveller Information Services Association (TISA) in December 2007 derived from former Forums and the CEN/ISO development project group, the TPEG Applications Working Group took over development work for TPEG technology.

It was about this time that the (then) new Unified Modelling Language (UML) was seen as having major advantages for the development of new TPEG Applications in communities who would not necessarily have binary physical format skills required to extend the original TPEG TS work. It was also realized that the XML format for TPEG described within the ISO/TS 24530-series (now superseded) had a greater significance than previously foreseen; especially in the content-generation segment and that keeping two physical formats in synchronism, in different standards series, would be rather difficult.

As a result TISA set about the development of a new TPEG structure that would be UML based – this has subsequently become known as TPEG Generation 2.

TPEG2 is embodied in the ISO/TS 21219-series and it comprises many parts that cover introduction, rules, toolkit and application components. TPEG2 is built around UML modelling and has a core of rules that contain the modelling strategy covered in Parts 2, 3, 4 and the conversion to two current physical formats: binary and XML; others could be added in the future. TISA uses an automated tool to convert from the agreed UML model XMI file directly into an MS Word document file, to minimize drafting errors, that forms the Annex for each physical format.

© ISO 2015 – All rights reserved
Documents
Document Sharing Hub
Full document details: PD ISO/TS 21219-5:2015

TPEG2 has a three container conceptual structure: Message Management (Part 6), Application (many Parts) and Location Referencing (Part 7). This structure has flexible capability and can accommodate many differing use cases that have been proposed within the TTI sector and wider for hierarchical message content.

TPEG2 also has many location referencing options as required by the service provider community, any of which may be delivered by vectoring data included in the Location Referencing Container. The following classification provides a helpful grouping of the different TPEG2 parts according to their intended purpose:

Toolkit parts: TPEG2-INV (Part 1), TPEG2-UML (Part 2), TPEG2-UBCR (Part 3), TPEG2-UXCR (Part 4), TPEG2-SFW (Part 5), TPEG2-MMC (Part 6), TPEG2-LRC (Part 7)

Special applications: TPEG2-SNI (Part 9), TPEG2-CAI (Part 10)

Location referencing: TPEG2-ULR (Part 11), TPEG2-ETL (Part 20), TPEG2-GLR (Part 21), TPEG2-OLR (Part 22)

Applications: TPEG2-PKI (Part 14), TPEG2-TEC (Part 15), TPEG2-FPI (Part 16), TPEG2-TFP (Part 18), TPEG2-WEA (Part 19), TPEG2-RMR (Part 23)

TPEG2 has been developed to be broadly (but not totally) backward compatible with TPEG1 to assist in transitions from earlier implementations, while not hindering the TPEG2 innovative approach and being able to support many new features, such as dealing with applications having both long-term, unchanging content and highly dynamic content, such as Parking Information.

This Technical Specification is based on the TISA specification technical/editorial version number: TPEG2-SFW/1.1/001.

© ISO 2015 – All rights reserved

Documents
Document Sharing Hub
Full document details: PD ISO/TS 21219-5:2015

Documents
Document Sharing Hub

Full document details: PD ISO/TS 21219-5:2015

Intelligent transport systems - Traffic and travel information (TTI) via transport protocol experts group, generation 2 (TPEG2) —

Part 5: Service framework (TPEG2-SFW)

1 Scope

This series of Technical Specifications establishes a method of conveying data for a wide range of applications that require the efficient transmission of point to multi-point data over potentially unreliable broadcast channels. It is also suitable for point-to-point and multicast applications and may easily be encapsulated in Internet Protocol.

This Technical Specification describes the basic capabilities of the generation 2 TPEG (TPEG2) for providing a multiplex of TPEG Services and applications. Together with the definitions of the general TPEG UML modelling rules and the particular physical TPEG representations for TPEG- binary streams (TISA: TPEG UML Conversion Rules) and tpegML files (TISA Specification: TPEG UML Conversion Rules), it replaces the former documents TPEG-INV and TPEG-SSF.

2 Normative references

The following documents, in whole or in part, are normatively referenced in this document and are indispensable for its application. For dated references, only the edition cited applies. For undated references, the latest edition of the referenced document (including any amendments) applies.

ISO/TS 18234-3, *Intelligent transport systems — Traffic and travel information via transport protocol experts group, generation 1 (TPEG1) binary data format — Part 3: Service and network information (TPEG1-SNI)*

ISO/TS 21219-2, *Intelligent transport systems — Traffic and travel information (TTI) via transport protocol experts group, generation 2 (TPEG2) — Part 2: UML modelling rules*

ISO/TS 21219-3, *Intelligent transport systems — Traffic and travel information (TTI) via transport protocol experts group, generation 2 (TPEG2) — Part 3: UML to binary conversion rules*

ISO/TS 21219-4, *Intelligent transport systems — Traffic and travel information (TTI) via transport protocol experts group, generation 2 (TPEG2) — Part 4: UML to XML conversion rules*

3 Terms, definitions and abbreviated terms

3.1 Terms and definitions

3.1.1
TPEG Application
application layer protocol fulfilling the general TPEG requirements at the highest layer of the ISO OSI model and standardized by TISA/ISO

Note 1 to entry: A TPEG Application consists of a set of classes and rules for encoding information required for a traffic information service.

© ISO 2015 – All rights reserved

Documents
Document Sharing Hub

Full document details: PD ISO/TS 21219-5:2015

3.1.2
TPEG Client
device or entity on the receiving side of the TPEG transmission chain

Note 1 to entry: See 4.2.

3.1.3
TPEG Server
device or entity on the sending side of the TPEG transmission chain

Note 1 to entry: See 4.2.

3.1.4
TPEG Service
multiplex of TPEG Service Components with a dedicated Service ID

Note 1 to entry: See 5.1.

3.1.5
TPEG Service Component
virtual channel for messages of a dedicated TPEG Application

Note 1 to entry: See 5.1.

3.1.6
Service Frame
data-structure implementing the TPEG Service in the TPEG binary representation

3.1.7
Service Component Frame
data-structure implementing the TPEG Service Component stream in the TPEG binary representation

3.1.8
TPEG Service Multiplex
multiplex of TPEG Services within one data stream or file

3.1.9
TPEG Stream Directory
TPEG Structure used for signalling the TPEG Services within a Service Multiplex

3.1.10
TPEG Structures
data structures used by TPEG on the particular protocol layers of the service transmission

© ISO 2015 – All rights reserved
Documents
Document Sharing Hub
Full document details: PD ISO/TS 21219-5:2015

3.2 Abbreviated terms

AID	Application Identification
BPN	Broadcast, Production and Networks (an EBU document publishing number system)
CEN	Comité Européen de Normalisation
CRC	Cyclic Redundancy Check
DAB	Digital Audio Broadcasting
DVB	Digital Video Broadcasting
EBU	European Broadcasting Union
INV	Introduction, Numbering and Versions (see EBU BPN 027 – 1)
IPR	Intellectual Property Right(s)
ISO	International Organization for Standardization
ITU-T	International Telecommunication Union - Telecom
OSI	Open Systems Interconnection
PTI	Public Transport Information
RTM	Road Traffic Message Application
SFWTPEG	Service Framework (this Technical Specification)
SIDTPEG	Service Identification
SNI	Service and Network Information Application (see EBU BPN 027 – 3)
SSF	Syntax, Semantics and Framing Structure
TPEG	Transport Protocol Experts Group
TTI	Traffic and Travel Information
UTC	Universal Coordinated Time
UML	Unified Modelling Language
XML	Extensible Markup Language
XSD	XML Schema Definition

4 Introduction — TPEG

4.1 TPEG transmission

TPEG is intended to operate via almost any simple digital data channel, where it is primarily targeted at broadcast media using byte oriented transparent data channels. Other physical formats may pose different constraints on a transmission layer. Thus, TPEG assumes nothing of the channel other than the ability to convey a stream of bytes. To this end, the concept of transmission via a “piece of wire” is envisaged, in which the bearer has no additional service features.

© ISO 2015 – All rights reserved

Documents
Document Sharing Hub
Full document details: PD ISO/TS 21219-5:2015

In Figure 1, a variety of possible transmission channels are shown. The only requirement of the channel is that a sequence of bytes may be carried between the TPEG generator and the TPEG decoder. This requirement is described as "transparency". However it is recognized that data channels may introduce errors. Bytes may be omitted from a sequence, bytes may become corrupted or additional and erroneous data could be received. Therefore TPEG incorporates error detection features at appropriate points and levels. It is assumed that bearer systems will introduce an appropriate level of error correction.

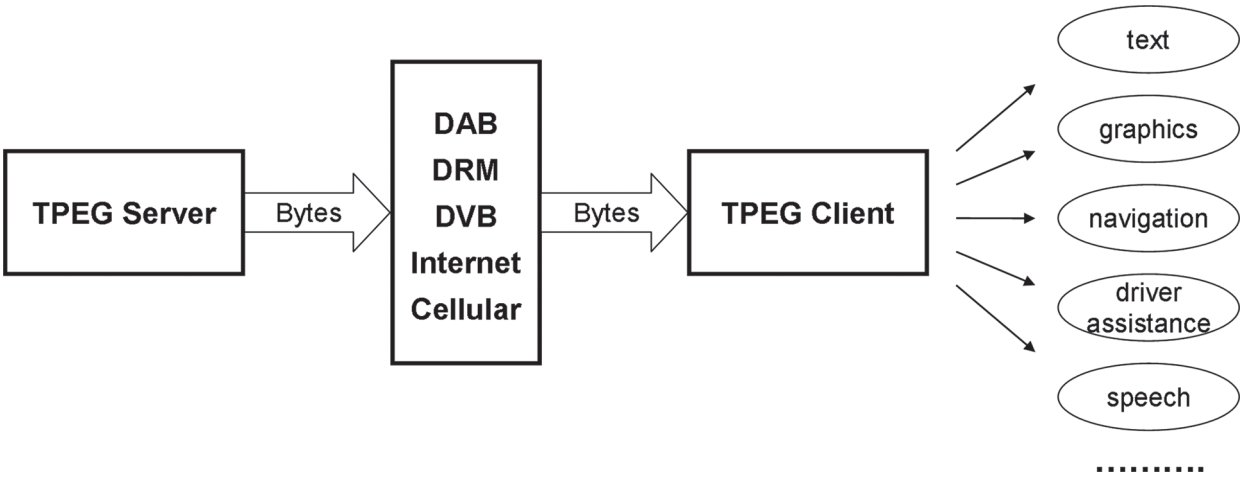

Figure 1 — TPEG data may be delivered simultaneously via different bearer channels

4.2 TPEG roles

The following roles are defined for TPEG devices:

— **TPEG Server** – is the device, group of devices or entity that provides the capabilities to encode TPEG objects, e.g. TPEG messages, TPEG Service Frames or TPEG Service Component Frames and which transmits it via a suitable digital bearer to the TPEG Client side.

— **TPEG Client** – is the device or entity that provides the capabilities to decode TPEG objects received from one or several TPEG Servers.

These terms are used in the rest of this Technical Specification to designate these roles.

4.3 TPEG layer model

In Figure 2, the different layers of the TPEG protocol are identified in accordance with the ISO/OSI model.

© ISO 2015 – All rights reserved
Documents
Document Sharing Hub
Full document details: PD ISO/TS 21219-5:2015

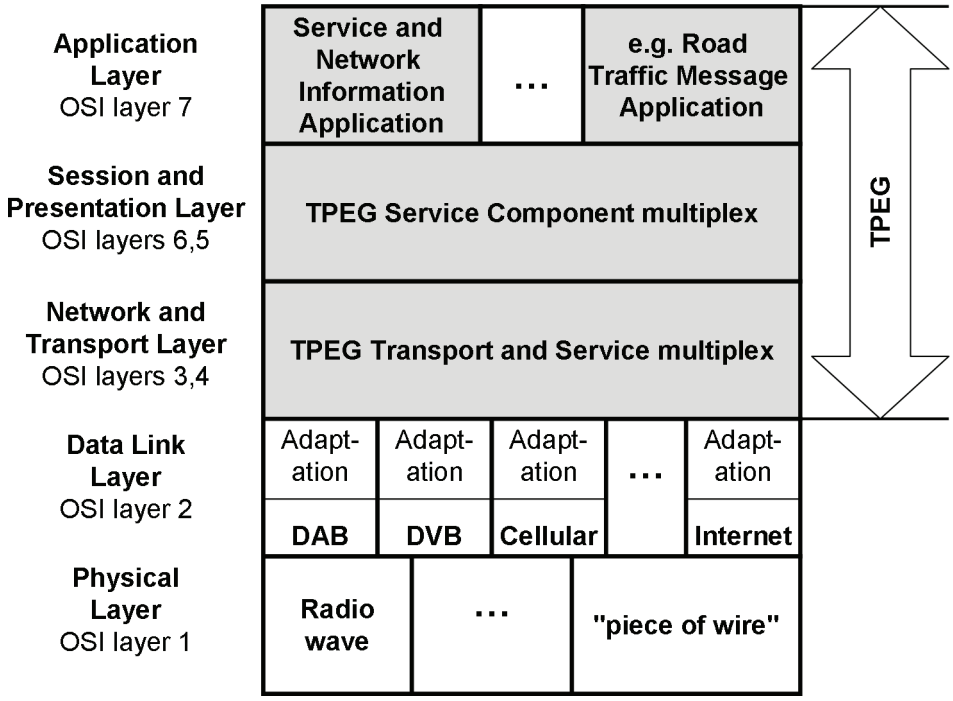

Figure 2 — TPEG in relation to the ISO/OSI Layer Model

Layer 7 is the top level and referred to in TPEG as the application layer. The following TPEG Applications are defined at date of publication of this Technical Specification:

— Service and Network Information (SNI) Application;

— Road Traffic Message (RTM) Application;

— Public Transport Information (PTI) Application;

— Location Referencing Container (LRC);

— Parking Information (PKI) Application;

— Traffic Event Compact (TEC) Application;

— Conditional Access Information (CAI) Application.

An up-to-date list of TPEG Applications can found on the TISA webpage.

Layers 6 and 5 are the presentation and session layers. TPEG Service Components are merged into a single stream and encrypted and/or compressed.

Layers 3 and 4 are the transport and network layers. These layers define the means for synchronisation and routing. This is the lowest layer of the TPEG protocol.

Layer 2 is the datalink layer. This layer consists of a wide range of different bearers, which are suitable carriers for the TPEG protocol. An adaptation layer may be required in order to map the TPEG stream onto that bearer. For that TPEG may also define requirements to the bearer.

Layer 1 is the physical layer. This defines the transmission medium (radio waves, wire, optical, etc). One particular bearer can make use of different physical layers.

© ISO 2015 – All rights reserved

Documents
Document Sharing Hub
Full document details: PD ISO/TS 21219-5:2015