PD ISO/TS 21364-1:2021

BSI Standards Publication

Domestic gas cooking appliances — Safety

Part 1: General requirements

Documents
Document Sharing Hub

Full document details: PD ISO/TS 21364-1:2021

National foreword

This British Standard is the UK implementation of ISO/TS 21364-1:2021.

The UK participation in its preparation was entrusted to Technical Committee GSE/35, Gas cooking appliances (domestic).

A list of organizations represented on this committee can be obtained on request to its committee manager.

Contractual and legal considerations

This publication has been prepared in good faith, however no representation, warranty, assurance or undertaking (express or implied) is or will be made, and no responsibility or liability is or will be accepted by BSI in relation to the adequacy, accuracy, completeness or reasonableness of this publication. All and any such responsibility and liability is expressly disclaimed to the full extent permitted by the law.

This publication is provided as is, and is to be used at the recipient's own risk.

The recipient is advised to consider seeking professional guidance with respect to its use of this publication.

This publication is not intended to constitute a contract. Users are responsible for its correct application.

This publication is not to be regarded as a British Standard.

© The British Standards Institution 2021
Published by BSI Standards Limited 2021

ISBN 978 0 539 17204 1

ICS 97.040.20

Compliance with a Published Document cannot confer immunity from legal obligations.

This British Standard was published under the authority of the Standards Policy and Strategy Committee on 31 May 2021.

Amendments/corrigenda issued since publication

Date	Text affected

Documents
Document Sharing Hub

Full document details: PD ISO/TS 21364-1:2021

TECHNICAL SPECIFICATION

ISO/TS 21364-1

First edition
2021-05

Domestic gas cooking appliances — Safety —

Part 1: General requirements

Appareils de cuisson domestiques utilisant les combustibles gazeux — Sécurité —

Partie 1: Exigences générales

Reference number
ISO/TS 21364-1:2021(E)

Documents
Document Sharing Hub

© ISO 2021

Full document details: PD ISO/TS 21364-1:2021

COPYRIGHT PROTECTED DOCUMENT

© ISO 2021

All rights reserved. Unless otherwise specified, or required in the context of its implementation, no part of this publication may be reproduced or utilized otherwise in any form or by any means, electronic or mechanical, including photocopying, or posting on the internet or an intranet, without prior written permission. Permission can be requested from either ISO at the address below or ISO's member body in the country of the requester.

ISO copyright office
CP 401 • Ch. de Blandonnet 8
CH-1214 Vernier, Geneva
Phone: +41 22 749 01 11
Email: copyright@iso.org
Website: www.iso.org

Published in Switzerland

© ISO 2021 – All rights reserved

Documents
Document Sharing Hub

Full document details: PD ISO/TS 21364-1:2021

Contents

Page

Foreword ... **vi**

Introduction ... **vii**

1 Scope ... **1**

2 Normative references ... **1**

3 Terms and definitions ... **2**
3.1 Definitions relating to appliances ... 2
3.2 Definitions relating to gas ... 4
3.3 Definitions relating to components ... 7

4 Components in gas cooking appliances ... **9**
4.1 General ... 9
4.2 Manual gas shut-off valves (Taps) ... 9
4.3 Knobs ... 9
4.3.1 Design of knobs ... 9
4.3.2 Marking for knobs ... 9
4.4 Multifunctional controls ... 10
4.5 Thermoelectric flame supervision controls ... 10
4.5.1 General ... 10
4.5.2 Opening time ... 10
4.5.3 Extinction delay time ... 10
4.6 Thermostats ... 11
4.7 Pressure regulators ... 11
4.7.1 General ... 11
4.7.2 Regulation capacity ... 11
4.8 Automatic shut-off valves ... 11
4.9 Injectors and adjusters ... 12
4.9.1 General ... 12
4.9.2 Injectors ... 12
4.9.3 Air rate adjusters ... 12
4.9.4 Low rate adjusters ... 12
4.10 Ignition systems ... 12
4.11 Thermal cut-outs ... 12

5 General conditions of test ... **13**
5.1 Reference conditions ... 13
5.2 Reference and test gases ... 13
5.2.1 Characteristics of the test gases ... 13
5.2.2 Conditions for producing test gases ... 13
5.3 Test pressures ... 13
5.4 Temperature conditions ... 13
5.5 Adjustment of the burner ... 14
5.6 Test installation ... 14
5.6.1 General ... 14
5.6.2 Built-in appliances ... 15
5.6.3 Freestanding appliances ... 15
5.6.4 Table-top appliances ... 16
5.7 Characteristics of the test pans ... 16
5.7.1 Pans required for testing on gas burners ... 16
5.7.2 Pans required for testing on electric hob elements and induction hob elements 17

6 Heat input ... **18**
6.1 General ... 18
6.2 Obtaining the nominal heat input ... 18
6.3 Measurements and calculations ... 18
6.4 Obtaining the reduced heat input ... 20

© ISO 2021 – All rights reserved

AVA Documents
Document Sharing Hub

Full document details: PD ISO/TS 21364-1:2021

6.4.1 Requirement ... 20
6.4.2 Test ... 20
6.5 Total heat input ... 20
6.5.1 Requirement ... 20
6.5.2 Test ... 20

7 Heating ... 20
7.1 General ... 20
7.2 Operating conditions ... 20
7.3 Heating tests ... 21
7.3.1 Requirement ... 21
7.3.2 Test under normal operation ... 21
7.4 Abnormal operation ... 24

8 Combustion ... 24
8.1 Measurement of all burners simultaneously ... 24
8.1.1 Requirement ... 24
8.1.2 Test ... 24
8.2 Blocked combustion products outlet ... 26
8.2.1 Requirement ... 26
8.2.2 Test ... 27
8.3 Analysis of the combustion products ... 27
8.3.1 General ... 27
8.3.2 Calculation with CO_2 ... 27
8.3.3 Calculation with O_2 ... 28

9 Ignition, cross lighting and flame stability ... 28
9.1 General ... 28
9.2 Movement of oven/grill door or cabinet door ... 28
9.2.1 Requirement ... 28
9.2.2 Test ... 28

10 Accumulation of unburnt gas and leak tightness ... 28
10.1 Accumulation of unburnt gas ... 28
10.2 Leakage ... 29
10.2.1 Requirement ... 29
10.2.2 Tests ... 29
10.3 Leak tightness of the appliance ... 29
10.3.1 General ... 29
10.3.2 Requirement ... 29
10.3.3 Test ... 29
10.4 Spillage of unburnt gas inside the appliance ... 30
10.4.1 Requirement ... 30
10.4.2 Test ... 30

11 Construction ... 30
11.1 General ... 30
11.2 Materials ... 30
11.2.1 General ... 30
11.2.2 Burner material test ... 31
11.2.3 Sealings ... 31
11.3 Gas inlet connections ... 31
11.4 Conversion to different gases ... 31
11.5 Pull forces of knobs for manual gas shut-off valves (taps) ... 31
11.5.1 Requirement ... 31
11.5.2 Test ... 32
11.6 Appliances that enable the user to program the start or the end of the cooking cycle ... 32
11.6.1 General ... 32
11.6.2 Electronic timer ... 32
11.6.3 Electro-mechanical or motorized timer ... 32
11.7 Compartment for one gas cylinder ... 33

© ISO 2021 – All rights reserved
Documents
Document Sharing Hub
Full document details: PD ISO/TS 21364-1:2021

11.8 Touch controls ... 33

12 Mechanical strength ... 33
12.1 Parts made of glass and glass-ceramic ... 33
12.1.1 General ... 33
12.1.2 Spring hammer test ... 33
12.1.3 Punch test ... 34

13 Electrical safety ... 35
13.1 General ... 35
13.2 Battery powered appliances ... 35

14 Marking and instructions ... 36
14.1 Marking ... 36
14.1.1 Marking on the appliance ... 36
14.1.2 Marking on the packaging ... 37
14.2 Instructions ... 37
14.2.1 General ... 37
14.2.2 Instructions for use and maintenance ... 38
14.2.3 Instructions for use and maintenance of glass parts ... 40
14.2.4 Instructions for the installer ... 40

Annex A (normative) **Table of test gases ... 44**

Annex B (normative) **Purity of gases ... 67**

Annex C (normative) **Accuracy of test equipment ... 68**

Annex D (informative) **Gas supply connections in force in various countries ... 69**

Annex E (normative) **National deviations in various countries ... 75**

Bibliography ... 79

© ISO 2021 – All rights reserved

Documents
Document Sharing Hub
Full document details: PD ISO/TS 21364-1:2021

Foreword

ISO (the International Organization for Standardization) is a worldwide federation of national standards bodies (ISO member bodies). The work of preparing International Standards is normally carried out through ISO technical committees. Each member body interested in a subject for which a technical committee has been established has the right to be represented on that committee. International organizations, governmental and non-governmental, in liaison with ISO, also take part in the work. ISO collaborates closely with the International Electrotechnical Commission (IEC) on all matters of electrotechnical standardization.

The procedures used to develop this document and those intended for its further maintenance are described in the ISO/IEC Directives, Part 1. In particular the different approval criteria needed for the different types of ISO documents should be noted. This document was drafted in accordance with the editorial rules of the ISO/IEC Directives, Part 2 (see www.iso.org/directives).

Attention is drawn to the possibility that some of the elements of this document may be the subject of patent rights. ISO shall not be held responsible for identifying any or all such patent rights. Details of any patent rights identified during the development of the document will be in the Introduction and/or on the ISO list of patent declarations received (see www.iso.org/patents).

Any trade name used in this document is information given for the convenience of users and does not constitute an endorsement.

For an explanation on the voluntary nature of standards, the meaning of ISO specific terms and expressions related to conformity assessment, as well as information about ISO's adherence to the World Trade Organization (WTO) principles in the Technical Barriers to Trade (TBT) see the following URL: www.iso.org/iso/foreword.html.

This document was prepared by Technical Committee ISO/TC 291, *Domestic gas cooking appliances*.

© ISO 2021 – All rights reserved
Documents
Document Sharing Hub
Full document details: PD ISO/TS 21364-1:2021

Introduction

This document provides general requirements for safety of domestic gas cooking appliances.

This document can also be applied, so far as is reasonable, to appliances not mentioned in this specific standard and to appliances designed on the basis of new principles, in which case additional requirements may be necessary.

Where no specific International Standard for an appliance exists, the appliance can be tested according to this document and further tests which take into account the intended use.

Gas burning appliances using fuel gases need to withstand the type of gas which is specified. Other ISO technical committees, e.g. ISO/TC 193, Natural gas, deal with the testing and properties of fuel gases.

Note that, due to the differing properties of fuel gas depending on its source/region of origin, certain differences in regulations exist at present in different regions; some of these differences are presented in Annexes A and E.

This document covers type testing.

This document series ISO 21364 "Domestic gas cooking appliances – Safety" is structured as follows:

- Part 1: General requirements
- Part 21: Particular requirements for hobs, surface grills and griddles
- Part 22: Particular requirements for ovens and compartment grills

This document can be supplemented by the corresponding clauses of ISO/TS 21364-21:2021 and ISO/TS 21364-22:2021.

© ISO 2021 – All rights reserved

Documents
Document Sharing Hub
Full document details: PD ISO/TS 21364-1:2021

Documents
Document Sharing Hub

Domestic gas cooking appliances — Safety —

Part 1:
General requirements

1 Scope

This document specifies the safety requirements for domestic gas cooking appliances. These appliances are freestanding, built-in or table-top and are intended to be used indoors. This document applies to the gas sections of the appliances and their component parts (e.g. combined gas-electric cooking appliances). This document does not apply to:

a) electrical heated elements as part of the appliance;

b) outdoor appliances;

c) appliances supplied at pressures greater than the maximum pressure of the test gases;

d) cook stoves, covered by the standards being developed in ISO/TC 285

In general, it does not take into account children playing with the appliance.

NOTE 1 For requirements of electrical safety refer to the IEC 60335 standard series.

NOTE 2 Attention is drawn to the fact that

- for appliances intended to be used in vehicles or on board of ships or aircrafts, additional requirements could be necessary;
- in many countries additional requirements are specified by the national health authorities, the national water supply authorities and similar authorities

This document does not cover requirements relating to gas cylinders, their pressure regulators and their connections.

This document does not cover requirements for gas installation.

2 Normative references

The following documents are referred to in the text in such a way that some or all of their content constitutes requirements of this document. For dated references, only the edition cited applies. For undated references, the latest edition of the referenced document (including any amendments) applies.

ISO 3166-1:2020, *Codes for the representation of names of countries and their subdivisions — Part 1: Country codes*

ISO 21364-22:2021, *Domestic gas cooking appliances – Safety- Part 22: Particular requirements for ovens and compartment grills*

ISO 23550:2018, *Safety and control devices for gas and/or oil burners and appliances — General requirements*

ISO 23551-1:2012, *Safety and control devices for gas burners and gas-burning appliances — Particular requirements — Part 1: Automatic and semi-automatic valves*

© ISO 2021 – All rights reserved

Documents
Document Sharing Hub
Full document details: PD ISO/TS 21364-1:2021

ISO 23551-2:2018, *Safety and control devices for gas burners and gas-burning appliances — Particular requirements — Part 2: Pressure regulators*

ISO 23551-5:2014, *Safety and control devices for gas burners and gas-burning appliances — Particular requirements — Part 5: Manual gas valves*

ISO 23551-6:2014, *Safety and control devices for gas burners and gas-burning appliances — Particular requirements — Part 6: Thermoelectric flame supervision controls*

ISO 23551-8:2016+Amd 1:2019, *Safety and control devices for gas burners and gas-burning appliances — Particular requirements — Part 8: Multifunctional controls*

ISO 23551-9:2015, *Safety and control devices for gas burners and gas-burning appliances — Particular requirements — Part 9: Mechanical gas thermostats*

IEC 60068-2-75:2014, *Environmental testing Part 2: Test Eh: Hammer test*

IEC 60335-1:2020, *Household and similar electrical appliances — Safety — Part 1: General requirements*

IEC 60335-2-6:2014, *Household and similar electrical appliances — Safety — Part 2-6: Particular requirements for stationary cooking ranges, hobs, ovens and similar appliances*

IEC 60335-2-102:2017, *Household and similar electrical appliances — Safety — Part 2-102: Particular requirements for gas, oil and solid-fuel burning appliances having electrical connections*

IEC 60730-1:2013+AMD1:2015+AMD2:2020, *Automatic electrical controls - Part 1: General requirements*

IEC 60730-2-7:2015, *Automatic electrical controls for household and similar use — Part 2-7: Particular requirements for timers and time switches*

IEC 60730-2-9:2015+AMD1:2018+AMD2:2020, *Automatic electrical controls for household and similar use — Part 2-9: Particular requirements for temperature sensing controls*

3 Terms and definitions

For the purposes of this document, the following terms and definitions apply.

ISO and IEC maintain terminological databases for use in standardization at the following addresses:

— ISO Online browsing platform: available at https://www.iso.org/obp

— IEC Electropedia: available at http://www.electropedia.org/

3.1 Definitions relating to appliances

3.1.1
domestic gas cooking appliance
appliance burning gas for food preparation incorporating one or more cooking function(s) and to be used by private individuals in a domestic environment

3.1.2
freestanding appliance
appliance intended to be placed on the floor, having an enclosure and not intended to have direct contact with adjacent furniture and not intended to be built-in

3.1.3
built-in appliance
appliance intended to be installed in a cabinet or unit or in a housing located in a wall

© ISO 2021 – All rights reserved
Documents
Document Sharing Hub
Full document details: PD ISO/TS 21364-1:2021

3.1.4
cooking range
combination of a *hob* (3.1.10) and an *oven* (3.1.13) which may incorporate a *grill* (3.1.5) or a *griddle* (3.1.11)

Note 1 to entry: Can be freestanding or built-in.

[SOURCE: IEC 60335-2-6:2014, 3.104]

3.1.5
grill
appliance or a part of an appliance constructed so that the food is supported on a grid or spit and is cooked by radiant heat

Note 1 to entry: Can be built-in, freestanding, placed in a compartment or a cooking surface. The *grill* (3.1.5) is sometimes also named as radiant.

[SOURCE: IEC 60335-2-6:2014, 3.102 modified – Note to entry has been replaced.]

3.1.6
combined gas-electric cooking appliance
appliance where the cooking function is powered by gas and electrical energy.

Note 1 to entry: Examples are a *cooking range* (3.1.4) with an electrical *oven* (3.1.13) and a gas *hob* (3.1.10) or a *hob* (3.1.10) with gas burners and electrical heating elements.

3.1.7
warming drawer
appliance or part of the appliance that fulfils an independent warming function

Note 1 to entry: The same requirements of a warming drawer are applied to a warming cabinet.

3.1.8
portable appliance
appliance that is intended to be placed on a table or working surface and having a mass less than 18 kg

3.1.9
table-top appliance
appliance that is intended to be placed on a table or working surface

Note 1 to entry: It can be portable

3.1.10
hob
appliance that incorporates one or several covered or open burners, and/or one or more electric heating element(s)Note to entry: Can be built-in, part of a *cooking range* (3.1.4) or table top.

[SOURCE: IEC 60335-2-6:2014, 3.103]

3.1.11
griddle
appliance or part of an appliance constructed so that the food is only cooked by contact heat on closed surface

3.1.12
surface cooking appliance
appliance that can be a *hob* (3.1.10), *griddle* (3.1.11), surface *grill* (3.1.5) or a combination of these devices

© ISO 2021 – All rights reserved

Documents
Document Sharing Hub
Full document details: PD ISO/TS 21364-1:2021

3.1.13
oven
appliance or part of an appliance having a closed compartment constructed so that the food is cooked by the heat transmitted by natural convection or by forced convection

Note 1 to entry: Can be freestanding, built-in, table top or part of a *cooking range* (3.1.4)

3.1.14
compartment grill
appliance or part of an appliance having a radiant heating element placed in a cavity

Note 1 to entry: Can be built-in or freestanding.

3.2 Definitions relating to gas

3.2.1
gas family
group of combustible gases with similar burning characteristics linked together by range of Wobbe indices

Note 1 to entry: Three gas families are known:

- First family: Town/Manufactured gas
- Second family: Natural gas
- Third family: Liquefied Petroleum Gas (LPG)

3.2.2
Wobbe index
ratio of the calorific value of a gas per unit volume and the square root of its *relative density* (3.2.17) under the same *reference conditions* (3.2.15)

Note 1 to entry: In this document only the gross Wobbe index (W_S) is used

Note 2 to entry: The Wobbe index is expressed either in

a) megajoules per cubic metre (MJ/m^3) of dry gas, or

b) megajoules per kilogram (MJ/kg) of dry gas.

3.2.3
test gas
gas intended for the verification of the operational characteristics of appliances using combustible gas; it can be *reference gas* (3.2.4) or *limit gas* (3.2.5)

3.2.4
reference gas
test gas (3.2.3) representative of the *gas family* (3.2.1) with which appliances operate under nominal conditions

3.2.5
limit gas
test gas (3.2.3) representative of the extreme variations in characteristics of the *gas family* (3.2.1) for which the appliances have been designed; such as:

— for *incomplete combustion* (3.2.10),

— for *flame lift* (3.2.6),

— for *light back* (3.2.7),

— for *sooting* (3.2.8) or *yellow tipping* (3.2.9).

© ISO 2021 – All rights reserved
Documents
Document Sharing Hub
Full document details: PD ISO/TS 21364-1:2021

3.2.6
flame lift
phenomenon characterized by the partial or total movement of the base of the flame away from the burner port

3.2.7
light back
phenomenon characterized by the return of the flame inside the body of the burner or on the *injector* (3.3.10)

3.2.8
sooting
phenomenon appearing at the time of *incomplete combustion* (3.2.10) and characterized by a deposit of soot on the surfaces in contact with the flames or the *combustion products* (3.2.25)

3.2.9
yellow tipping
phenomenon characterized by the appearance of yellow colouring at the top of the blue cone of an aerated flame

3.2.10
incomplete combustion
combustion process which entails only partial burning of gas

Note 1 to entry: Carbon monoxide is typically produced as a by-product

3.2.11
cross lighting
complete ignition of all ports around a ring of flame ports and/or successful ignition of all rings of ports from an adjacent ring of ports

3.2.12
heat input
quantity of energy used in unit time corresponding to the *volumetric* or *mass flow rates* (3.2.23, 3.2.24), the calorific value used being the *Gross calorific value* (3.2.16)

Note 1 to entry: The heat input is expressed in kilowatts (kW)

3.2.13
nominal heat input
value of the *heat input* (3.2.12) as declared by the manufacturer

[SOURCE: ISO 22967:2010]

3.2.14
gas installation
a combination of the following used or intended to be used in the supplying and utilisation of gas taken as separate items or as a whole: Consumer piping, fittings, components, flues, sub-meters, apparatus or other devices and associated requirements

3.2.15
reference conditions
dry gas under conditions of temperature and pressure: 15 °C and 101,325 kPa

[SOURCE: ISO 6976:2016]

© ISO 2021 – All rights reserved

Documents
Document Sharing Hub
Full document details: PD ISO/TS 21364-1:2021

3.2.16
Gross calorific value
amount of heat that would be released by the complete combustion with oxygen of a specified quantity of gas, in such a way that the pressure, 101,325 kPa, at which the reaction takes place remains constant, and all the *combustion products* (3.2.25) are returned to the same specified temperature, 15 °C, as that of the reactants, all of these products being in the gaseous state except for water, which is condensed to the liquid state at 15 °C

[SOURCE: ISO 6976:2016, 3.1, modified – p1 replaced by 101,325 kPa; t1 replaced by 15°C, Note to entry has been replaced]

Note 1 to entry: The calorific value is expressed:

- either in megajoules per cubic metre (MJ/m^3) of dry gas;
- or in megajoules per kilogram (MJ/kg) of dry gas.

Note 2 to entry: In this document only the Gross calorific value is used

3.2.17
relative density
ratio of the masses of equal volumes of dry gas and dry air under the same conditions of temperature and pressure

[SOURCE: ISO 22967:2010, 3.2.3]

3.2.18
gas supply pressure
difference between the static pressure measured at the inlet connection of the appliance in operation and the atmospheric pressure

[SOURCE: EN 30-1-1:2008+A3:2013]

Note 1 to entry: The gas pressures used are expressed in kilopascals (kPa).

3.2.19
test pressure
gas pressure used to verify the operational characteristics of appliances using combustible gases, consisting of normal or *limit pressure* (3.2.21)

[SOURCE: EN 30-1-1:2008+A3:2013]

3.2.20
normal pressure
pressure under which the appliances operate in nominal conditions, when they are supplied with the corresponding *reference gas* (3.2.4)

Note 1 to entry: The gas pressures used are expressed in kilopascals (kPa)

3.2.21
limit pressure
pressure representative of the extreme variations in the supply conditions

maximum pressure: p_{max};

minimum pressure: p_{min}

3.2.22
pressure couple
combination of two distinct gas distribution pressures applied by reason of the significant difference existing between the Wobbe indices within a single family in which:

© ISO 2021 – All rights reserved
Documents
Document Sharing Hub
Full document details: PD ISO/TS 21364-1:2021

- the higher pressure corresponds only to gases of low *Wobbe index* (3.2.2);
- the lower pressure corresponds to gases of high *Wobbe index* (3.2.2)

[SOURCE: EN 437:2018, modified – Note to entry has been deleted]

3.2.23
volumetric flow rate
volume of gas consumed by the burner or burners in unit time, with the gas under *reference conditions* (3.2.15)

Note 1 to entry: The volumetric flow rate is expressed in cubic meter per hour (m3/h) or possibly litre per minute (l/min), litre per second (l/s), cubic decimetre per hour (dm3/h), cubic decimetre per second (dm3/s).

[SOURCE: EN 30-1-1:2008+A3:2013]

3.2.24
mass flow rate
mass of gas consumed by the appliance in unit time during continuous operation

Note 1 to entry: The mass flow rate is expressed in kilogram per hour (kg/h), or eventually gram per hour (g/h).

[SOURCE: EN 30-1-1:2008+A3:2013]

3.2.25
combustion products
constituents resulting from the combustion of a fuel gas with the oxygen of the air, including the inerts, but excluding excess air

3.3 Definitions relating to components

3.3.1
pressure regulator
device that maintains the outlet pressure constant within given limits, independently of the variations in inlet pressure and/or flow rate

[SOURCE: ISO 23551-2:2006, 3.1.1]

3.3.2
manual gas shut-off valve (tap)
manually operated valve for the control of the gas flow from an “off” to an “on” position and vice versa

[SOURCE: ISO 23551-5:2014]

3.3.3
multifunctional control
combination of two or more controls, at least one of these is a mechanical control, whereby the functional parts cannot operate if separated

[SOURCE: ISO 23551-8: 2016+Amd 1:2019]

3.3.4
mechanical thermostat
thermostat which controls the temperature by adjusting the flow rate accordingly to the temperature of the thermal sensing element without any external energy, such that the temperature remains within defined limits

[SOURCE: ISO 23551-9:2015]

3.3.5
flame supervision device
device designed to stop flammable gas going to the burner of a gas appliance if the flame is extinguished

AVA Documents
Document Sharing Hub

© ISO 2021 – All rights reserved

Full document details: PD ISO/TS 21364-1:2021

3.3.6
thermoelectric flame supervision control
thermoelectric flame supervision device
control which, in response to the electromagnetic force produced by the thermocouple, maintains the gas way to the main burner open and which shuts off the gas way after extinction of the supervised flame

[SOURCE: ISO 23551-6:2014, modified – Note to entry has been deleted; pilot burner has been deleted]

3.3.7
opening time
time which elapses between the ignition of the supervised flame and the moment when the effect of this flame is sufficient to hold open the shut-off device

[SOURCE: EN 30-1-1:2008+A3:2013]

3.3.8
extinction delay time
time which elapses between the extinction of the supervised flame and the closure of the gas supply controlled by the *flame supervision device* (3.3.5)

[SOURCE: EN 30-1-1:2008+A3:2013]

3.3.9
automatic shut-off valve
valve which opens when energized and closes automatically when de-energized

[SOURCE: ISO 23551-1:2012]

3.3.10
injector
component part that admits the gas into an aerated burner

Note 1 to entry: There are two types of injectors:

– calibrated injector in which the section of the outlet orifice is fixed;

– adjustable injector in which the section of the outlet orifice is variable.

[SOURCE: EN 30-1-1:2008+A3:2013]

3.3.11
low rate adjuster
device allowing the reduced gas rate to a burner to be set at a pre-determined value according to the supply conditions

[SOURCE: EN 30-1-1:2008+A3:2013]

Note 1 to entry: The adjustment may be continuous (adjustment screw) or discontinuous (change of calibrated orifices, etc.)

Note 2 to entry: The operation of changing the setting of this device is termed the "adjustment of the reduced gas rate"

3.3.12
air rate adjuster
device allowing the aeration of a burner to be set at a pre-determined value according to the supply conditions

[SOURCE: EN 30-1-1:2008+A3:2013]

© ISO 2021 – All rights reserved
Documents
Document Sharing Hub
Full document details: PD ISO/TS 21364-1:2021

3.3.13
spacer
component used in a gap to maintain a predetermined gap width

[SOURCE: ISO 6707-1:2014, 5.5.90]

3.3.14
touch control
control actuated by contact or proximity of a finger, with little or no movement of the contact surface

[SOURCE: IEC 60335-2-6:2014]

3.3.15
pan support
support placed above an uncovered hob burner, which supports the pan being heated

3.3.16
covered burner
burner under a removable closed cooking surface; there is no direct flame contact to the pan or food

[SOURCE: EN 30-1-1:2008+A3:2013]

3.3.17
hob guard
device that reduces physical access to the cooking surface to avoid hazardous situations

3.4
qualified person
a person with relevant education, training, knowledge and experience to enable him or her to perceive risks and to avoid danger which is related to gas appliances

4 Components in gas cooking appliances

4.1 General

Components in gas cooking appliances shall conform with the applicable ISO- or IEC Standards. Components not covered by these standards shall be tested in the appliance.

4.2 Manual gas shut-off valves (Taps)

Manual gas shut-off valves shall conform with ISO 23551-5:2014.

4.3 Knobs

4.3.1 Design of knobs

The purpose of knobs shall be clearly identifiable in respect to the burner they control. Removable knobs shall be constructed such that installation shall be possible in only the correct orientation.

For a tap operated by rotating, the closing direction shall be clockwise. This does not apply to a combined tap for oven and grill burners.

4.3.2 Marking for knobs

Markings shall be clearly visible, legible and durable. It shall be easy for the user to identify the burner and the setting the markings refer to.

The closed position shall be marked with figure "0", or a full disc or a circle of at least 3 mm in diameter.

© ISO 2021 – All rights reserved

Documents
Document Sharing Hub
Full document details: PD ISO/TS 21364-1:2021

The closed position for all knobs shall be the same.

Symbols for the other positions may be as follows:

full rate position:	large flame	
reduced rate position:	small flame	
range of rates:	triangle	or
	or	
	scale	1 2 3 4 or 4 3 2 1
position of ignition	stylized star	

Other symbols may be used except letters.

If there is a special position for ignition, it shall be marked e.g. by a stylized star.

4.4 Multifunctional controls

Multifunctional controls shall conform with ISO 23551-8: 2016+Amd 1:2019.

4.5 Thermoelectric flame supervision controls

4.5.1 General

Thermoelectric flame supervision controls shall conform with ISO 23551-6:2014+Amd 1:2019. Its sensing element shall supervise a single burner only.

In the case of a failure of any of the components indispensable to their operation, the supply of gas controlled by the device is cut off automatically and its re-establishment shall require manual intervention.

For measuring the opening time and the extinction delay time the appliance shall be supplied with each of the reference gases that the appliance can use at the corresponding normal pressure.

4.5.2 Opening time

4.5.2.1 Requirement

During the following test the opening time of a hob burner shall be less than 10 s. The opening time of an oven or a grill burner shall be less than 15 s.

4.5.2.2 Test

The appliance shall be in cold conditions. Each burner is lit, and the opening time is measured as the time between the moment the flame appears and the moment when the thermoelectric flame supervision control allows admission of gas to the burner without manual intervention

4.5.3 Extinction delay time

4.5.3.1 Requirement

During the following test the extinction delay time for hob burners shall be less than 90 s. The extinction delay time for an oven or grill burner shall be less than 60 s.

© ISO 2021 – All rights reserved
Documents
Document Sharing Hub
Full document details: PD ISO/TS 21364-1:2021

4.5.3.2 Test

The burner is operated at full rate for 20 min and hob burners are equipped with a pan according 5.7 and filled with water up to (50 ± 2) mm from the bottom. The extinction delay time is measured between the moment when the flame goes off (e.g. by cutting and immediately restoring the gas supply) and the moment when gas flow to the burner stops due to the action of the thermoelectric flame supervision control.

4.6 Thermostats

Mechanical thermostats for domestic gas cooking appliances shall conform with ISO 23551-9:2015.

Electrical thermostats shall conform with IEC 60730-2-9:2015+AMD1:2018+AMD2:2020 and IEC 60335-2-6:2014, 24.101.

4.7 Pressure regulators

4.7.1 General

Pressure regulators shall conform with ISO 23551-2:2018.

A pressure regulator is prohibited for appliances operating with a pressure couple.

4.7.2 Regulation capacity

4.7.2.1 Requirement

Under the test conditions below, the gas rate shall be within ± 7,5 % of the rate obtained at the normal pressure.

4.7.2.2 Tests

Two tests shall be performed using reference gas at ambient temperature.

The gas rate is adjusted as described for Test 1 and Test 2, and then, the pressure is varied between minimum pressure and maximum pressure of the corresponding reference gas (corresponding Table of Annex A).

4.7.2.2.1 Test 1

For an appliance with several burners, the gas rate corresponds to 2/3 of the sum of the nominal heat inputs of all the burners, which can function simultaneously. For an appliance with only one burner, the gas rate corresponds to the nominal heat input.

4.7.2.2.2 Test 2

The appliance gas rate is adjusted to 0,08 m^3/h for first family gases and to 0,05 m^3/h for second family gases, and to 0,02 m^3/h for third family gases.

4.8 Automatic shut-off valves

Automatically operated valves shall conform with ISO 23551-1:2012.

© ISO 2021 – All rights reserved

Documents
Document Sharing Hub
Full document details: PD ISO/TS 21364-1:2021

4.9 Injectors and adjusters

4.9.1 General

Air rate adjusters and injectors shall be of metallic material and have a melting point above 500 °C. Additionally they shall be corrosion resistant or have a corrosion resistant finish.

4.9.2 Injectors

It shall only be possible to mount and dismantle an injector with the use of a tool.

Injectors, that are likely to be soiled as a result of cooking, shall be accessible for cleaning. They shall be indelibly marked for identification if, once the appliance is installed, it is possible to dismantle and exchange the injectors.

4.9.3 Air rate adjusters

Air rate adjuster shall be set in the factory and, if necessary, shall only be adjusted by a qualified person.

Air rate adjusters shall be locked. They shall not be unlocked without the aid of a tool.

NOTE Locked in the adjustment position means fixed or immobilized.

4.9.4 Low rate adjusters

Low rate adjusters shall be set and locked in the factory.

Low rate adjusters shall only be adjusted by a qualified person according to the instructions for conversion to various gases.

It shall only be possible to move the adjuster with the use of a tool. Adjusting screws shall be placed so that they cannot fall into the gas passage.

NOTE Locked in the adjustment position means fixed or immobilized.

4.10 Ignition systems

A touchable spark ignition system shall conform with IEC 60335-2-102:2017, 8.101.

It shall withstand 25.000 cycles of operation.

All the components of the ignition device shall be designed to avoid damage or accidental displacement in normal use. The relative position of the ignition device and the burner shall be sufficiently well defined to ensure satisfactory operation of the assembly.

In the event of failure of the ignition system for the burner(s) of the appliance, it shall be possible to light the burner(s) concerned with a match after removing, if necessary, a movable part (griddle, bottom of the oven, etc.). This requirement shall not apply to oven burners that are designed specifically to prevent the ignition by manual means. In this case, the manufacturer's instructions for use and maintenance shall state that the ignition by manual means is prohibited.

The electrical safety shall be checked according to IEC 60335-2-102:2017.

4.11 Thermal cut-outs

Thermal cut-outs of the capillary type shall conform with the requirements for type 2 K controls in IEC 60730-2-9:2015+AMD1:2018+AMD2:2020.

© ISO 2021 – All rights reserved
Documents
Document Sharing Hub
Full document details: PD ISO/TS 21364-1:2021

5 General conditions of test

5.1 Reference conditions

All determined values of this document shall be in accordance with the following reference conditions:

- dry gas
- temperature of 15 °C
- pressure of 101,325 kPa

In this document, only the Gross calorific value (H_s) shall be used.

5.2 Reference and test gases

5.2.1 Characteristics of the test gases

The burners shall be tested with the test gases indicated in Annex A, in the corresponding Table for the countries of destination.

5.2.2 Conditions for producing test gases

The composition of the gases used for the tests shall be as near as possible to those given in Annex A, in the corresponding Table for the countries of destination. The production of these gases shall be in accordance with the following rules:

- the Wobbe index of the gas used shall be within ± 2 % of the value indicated in the Table for the corresponding test gas (this tolerance includes the error of the measuring equipment);
- the constituents of the test gases shall have the minimum degree of purity according to Annex B, Table B1.

5.3 Test pressures

The test pressures, i.e. the static pressure to be applied at the gas inlet connection of the appliance in operation, are given in Annex A, in the corresponding Table for the countries of destination.

5.4 Temperature conditions

The ambient temperature for the tests shall be (20 ± 5) °C. All tests shall be carried out in a substantially draught-free room in which the ambient temperature is maintained during the complete test.

The ambient temperature is measured with an appropriate instrument under the following conditions:

- at a height of (900 ± 50) mm from the floor;
- at a distance of between 1 m and 1,5 m from the appliance;
- using an instrument which is accurate to within ± 0,5 °C.

The instrument shall not be affected by radiation from the appliance.

For the purposes of this document, the burner is considered to be cold, when it meets the specification for ambient temperature. A burner is considered to be hot after 10 minutes of operation at full rate (hot conditions).

© ISO 2021 – All rights reserved

Documents
Document Sharing Hub
Full document details: PD ISO/TS 21364-1:2021

5.5 Adjustment of the burner

For all the tests, the appliance shall be fitted with the appropriate injector(s) for the family of gases to which the test gas belongs. The adjusters, if any, shall be adjusted according to the instructions for the installer.

One burner is considered to be operating at the nominal heat input if, when supplied at normal pressure with reference gas, the heat input meets the requirements of 6.2, Table 3.

Once the adjustments have been made for one reference gas, they shall not be altered for the tests at the other pressures and for the limit gases defined for the reference gas for which the appliance is equipped and adjusted.

5.6 Test installation

5.6.1 General

The test structure and the cabinet shall be made of (20 ± 2) mm thick matt black painted wooden panels. The worktop shall be 18 mm up to 32 mm thick.

For surface cooking appliances, a range hood or horizontal wooden panel shall be placed at a minimum height of 650 mm from pan supports, unless a greater distance is stated in the instructions for the installer of the appliance.

Any spacers specified in the instructions for the installer shall be placed between the panels and the appliance in accordance with the instructions for the installer.

All freestanding, built-in and table-top appliances shall be tested with a back panel with a minimum height of 1,80 m from the floor, and a length at least 50 mm longer than the appliance.

Temperature rises shall be determined by means of fine-wire thermocouples positioned so that they have minimum effect on the temperature of the part under test.

NOTE Thermocouples having wires with a diameter not exceeding 0,3 mm are considered to be fine-wire thermocouples.

Thermocouples used for determining the temperature rise of the surface of walls, ceiling and floor of the test installation are attached to the back of small blackened disks of copper or brass, 15 mm in diameter and 1 mm thick. The front of the disk shall be flush with the surface of the board (Figure 1).

As far as possible, the appliance shall be positioned so that the thermocouples detect the highest temperature.

Dimensions in millimetres

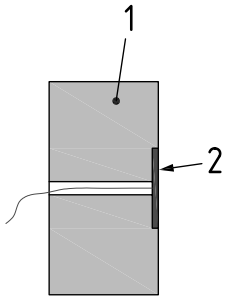

Key

1 = matt black painted wooden test panel (20 ± 2) mm

2 = blackened copper or brass disc Ø 15 mm

Figure 1 — Placement of the thermocouple in the test installation

© ISO 2021 – All rights reserved
Documents
Document Sharing Hub
Full document details: PD ISO/TS 21364-1:2021

5.6.2 Built-in appliances

The tests shall be carried out with the appliance installed in a cabinet according to the instructions for the installer (Figure 2).

The tests shall be carried out with all the appliance doors closed, if any.

Dimensions in millimetres

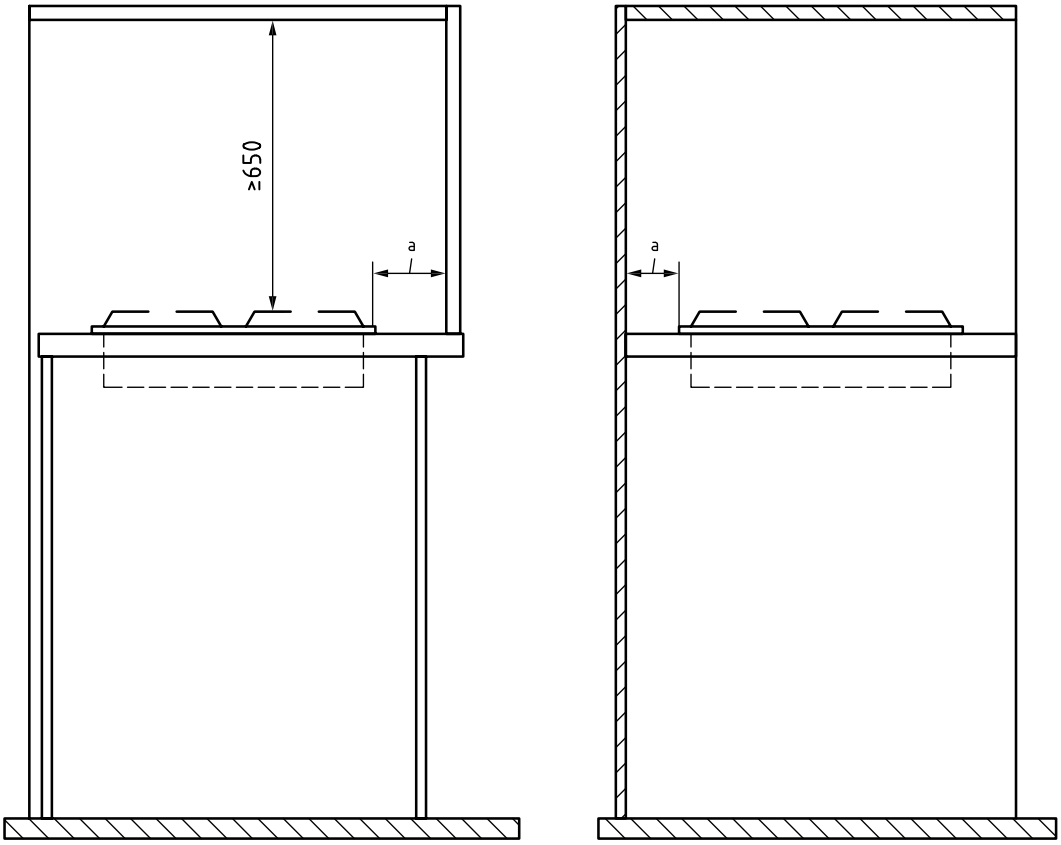

front view **side view**

Key

a = dimensions specified in the instructions for the installer

Figure 2 — Example of test installation for built-in appliances

5.6.3 Freestanding appliances

A freestanding appliance shall be installed according to the instructions for the installer with wooden panels on both sides extending up to the nominal worktop height, a back panel and a panel above the cooking surface (Figure 3). A floor-supported unit with adjustable feet shall be level with the feet adjusted to the most unfavourable position.

Dimensions in millimetres

© ISO 2021 – All rights reserved

Documents
Document Sharing Hub
Full document details: PD ISO/TS 21364-1:2021

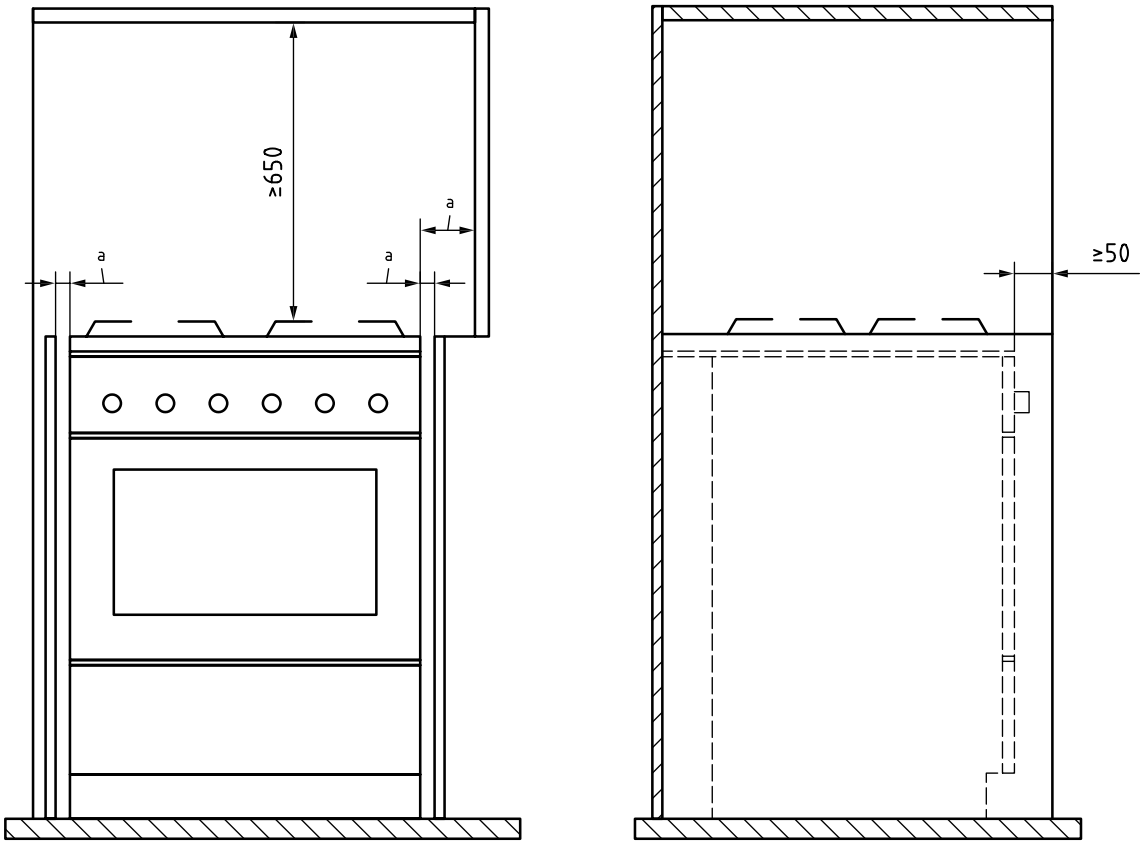

front view **side view**

Key

a = dimensions specified in the instructions for the installer

Figure 3 — Example of test installation for free standing appliances

5.6.4 Table-top appliances

Table-top appliances shall be placed on a horizontal panel representing a table or working surface and extending at least 100 mm beyond the corresponding dimensions of the appliance. The appliance shall be placed against the back panel. A vertical panel shall be placed on the most critical side of the appliance.

5.7 Characteristics of the test pans

5.7.1 Pans required for testing on gas burners

The pan is made of unpolished commercial quality aluminium.

Unless otherwise indicated, the pans required for testing on gas burners shall be selected in accordance with Table 1 and their dimensions shall be in accordance with Table 2 and Figure 4.

Table 1 — Pan size

Heat input (kW)	Pan size (mm)
< 1.26	140

© ISO 2021 – All rights reserved
Documents
Document Sharing Hub
Full document details: PD ISO/TS 21364-1:2021

Table 1 *(continued)*

1.26 - 1.59	160
1.60 - 2.01	180
2.02 - 2.43	200
2.44 - 2.92	220
2.93 - 3.48	240
3.49 - 4.18	260
4.19 - 5.23	280
>5.23	300

Table 2 — Characteristics of pans necessary for testing on gas burners

Dimension	Unit	Pan [1]													Tolerances
ØA	mm	140	160	180	190	200	220	240	260	280	300	320	340	360	± 3 %
C	mm	1 , 0 - 2,0	1 , 0 - 2,0	1 , 0 - 2,0	1 , 0 - 2,0	1 , 0 - 2,0	1 , 0 - 2,0	1 , 0 - 2,0	1 , 5 - 2,5	1 , 5 - 2,5	1 , 5 - 2,5	1 , 5 - 2,5	1 , 5 - 2,5	1 , 5 - 2,5	
D	mm	1 , 0 - 2,0	1 , 0 - 2,0	1 , 0 - 2,0	1 , 0 - 2,0	1 , 0 - 2,0	1 , 0 - 2,0	1 , 0 - 2,0	1 , 5 - 2,5	1 , 5 - 2,5	1 , 5 - 2,5	1 , 5 - 2,5	1 , 5 - 2,5	1 , 5 - 2,5	
E_{max}	mm	20	23	26	27	29	32	35	38	41	44	47	50	53	
1 All pans are without handles															

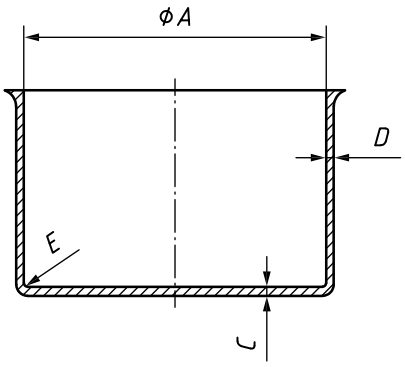

Key

A internal diameter measured at the top

C thickness of base

D thickness of the side

E internal radius

Figure 4 — Test pans required for testing on gas burners

5.7.2 Pans required for testing on electric hob elements and induction hob elements

For electric hob elements the test pans shall be according to IEC 60335-2-6:2014, Figure 101. For induction hob elements the test pans shall be according to IEC 60335-2-6:2014, Figure 102. The water content shall be according to IEC 60335-2-6:2014, 3.1.9.101, Table 101.

© ISO 2021 – All rights reserved

Documents
Document Sharing Hub
Full document details: PD ISO/TS 21364-1:2021