PD ISO/TS 21815-2:2021

BSI Standards Publication

# Earth-moving machinery — Collision warning and avoidance

Part 2: On-board J1939 communication interface

Documents
Document Sharing Hub

Full document details: PD ISO/TS 21815-2:2021

# National foreword

This Published Document is the UK implementation of ISO/TS 21815-2:2021.

The UK participation in its preparation was entrusted to Technical Committee B/513/1, Earth moving machinery (International).

A list of organizations represented on this committee can be obtained on request to its committee manager.

**Contractual and legal considerations**

This publication has been prepared in good faith, however no representation, warranty, assurance or undertaking (express or implied) is or will be made, and no responsibility or liability is or will be accepted by BSI in relation to the adequacy, accuracy, completeness or reasonableness of this publication. All and any such responsibility and liability is expressly disclaimed to the full extent permitted by the law.

This publication is provided as is, and is to be used at the recipient's own risk.

The recipient is advised to consider seeking professional guidance with respect to its use of this publication.

This publication is not intended to constitute a contract. Users are responsible for its correct application.

This publication is not to be regarded as a British Standard.

© The British Standards Institution 2021
Published by BSI Standards Limited 2021

ISBN 978 0 539 04020 3

ICS 53.100

**Compliance with a Published Document cannot confer immunity from legal obligations.**

This Published Document was published under the authority of the Standards Policy and Strategy Committee on 31 July 2021.

**Amendments/corrigenda issued since publication**

| Date | Text affected |
|---|---|

Documents
Document Sharing Hub

Full document details: PD ISO/TS 21815-2:2021

TECHNICAL SPECIFICATION

# ISO/TS 21815-2

First edition
2021-07

# Earth-moving machinery — Collision warning and avoidance —

## Part 2: On-board J1939 communication interface

*Engins de terrassement — Avertissement et évitement de collision — Partie 2: Interface de communication embarquée*

Reference number
ISO/TS 21815-2:2021(E)

Documents
Document Sharing Hub

© ISO 2021

Full document details: PD ISO/TS 21815-2:2021

**COPYRIGHT PROTECTED DOCUMENT**

© ISO 2021

All rights reserved. Unless otherwise specified, or required in the context of its implementation, no part of this publication may be reproduced or utilized otherwise in any form or by any means, electronic or mechanical, including photocopying, or posting on the internet or an intranet, without prior written permission. Permission can be requested from either ISO at the address below or ISO's member body in the country of the requester.

ISO copyright office
CP 401 • Ch. de Blandonnet 8
CH-1214 Vernier, Geneva
Phone: +41 22 749 01 11
Email: copyright@iso.org
Website: www.iso.org

Published in Switzerland



© ISO 2021 – All rights reserved

Documents
Document Sharing Hub

Full document details: PD ISO/TS 21815-2:2021

# Contents

Page

**Foreword** ... **iv**
**Introduction** ... **v**
**1 Scope** ... **1**
**2 Normative references** ... **1**
**3 Terms and definitions** ... **1**
**4 Symbols and abbreviated terms** ... **5**
**5 Logical interface** ... **5**
5.1 Logical groups ... 5
5.2 Negotiation ... 6
5.3 Initialisation ... 6
5.4 Operation ... 6
**6 Physical interface** ... **7**
6.1 General ... 7
6.2 Machine connector ... 7
6.3 CxD connector ... 8
6.4 Override switch ... 9
6.5 Physical layer ... 10
**7 J1939 communication protocol** ... **10**
7.1 General ... 10
7.2 PGN:CxD»machine status ... 11
7.2.1 General ... 11
7.2.2 PGN description ... 12
7.2.3 SPN structure ... 14
7.3 PGN:CxD»MachineCommand ... 37
7.3.1 General ... 37
7.3.2 PGN description ... 37
7.3.3 SPN structure ... 39
7.4 PGN:Machine»CxDreply ... 43
7.4.1 General ... 43
7.4.2 PGN description ... 45
7.4.3 SPN structure ... 46
7.5 PGN:Machine»CxDdata (PROPULSION) ... 54
7.5.1 General ... 54
7.5.2 PGN description ... 55
7.5.3 SPN structure ... 56
7.5.4 PROPULSION subsystem ... 57
7.6 PGN:Machine»CxDstatus ... 62
7.7 PGN:Machine»CxDcommand ... 62
7.8 PGN:CxD»MachineReply ... 63
7.9 PGN:CxD»MachineData ... 63
7.10 PGN:Time/Date ... 63
**8 Documentation** ... **64**
8.1 Machine documentation ... 64
8.2 System documentation ... 64
**Annex A** (informative) **Communication sequences** ... **66**
**Annex B** (informative) **Trust mechanisms** ... **74**
**Annex C** (informative) **Implementation examples for override and standby modes** ... **80**
**Bibliography** ... **82**

© ISO 2021 – All rights reserved


Documents
Document Sharing Hub
Full document details: PD ISO/TS 21815-2:2021

# Foreword

ISO (the International Organization for Standardization) is a worldwide federation of national standards bodies (ISO member bodies). The work of preparing International Standards is normally carried out through ISO technical committees. Each member body interested in a subject for which a technical committee has been established has the right to be represented on that committee. International organizations, governmental and non-governmental, in liaison with ISO, also take part in the work. ISO collaborates closely with the International Electrotechnical Commission (IEC) on all matters of electrotechnical standardization.

The procedures used to develop this document and those intended for its further maintenance are described in the ISO/IEC Directives, Part 1. In particular, the different approval criteria needed for the different types of ISO documents should be noted. This document was drafted in accordance with the editorial rules of the ISO/IEC Directives, Part 2 (see www.iso.org/directives).

Attention is drawn to the possibility that some of the elements of this document may be the subject of patent rights. ISO shall not be held responsible for identifying any or all such patent rights. Details of any patent rights identified during the development of the document will be in the Introduction and/or on the ISO list of patent declarations received (see www.iso.org/patents).

Any trade name used in this document is information given for the convenience of users and does not constitute an endorsement.

For an explanation of the voluntary nature of standards, the meaning of ISO specific terms and expressions related to conformity assessment, as well as information about ISO's adherence to the World Trade Organization (WTO) principles in the Technical Barriers to Trade (TBT), see www.iso.org/iso/foreword.html.

This document was prepared by Technical Committee ISO/TC 127, *Earth-moving machinery*, Subcommittee SC 2, *Safety, ergonomics and general requirements*.

A list of all parts in the ISO 21815 series can be found on the ISO website.

Any feedback or questions on this document should be directed to the user's national standards body. A complete listing of these bodies can be found at www.iso.org/members.html.


© ISO 2021 – All rights reserved
Documents
Document Sharing Hub
Full document details: PD ISO/TS 21815-2:2021

# Introduction

The increasing use of detection systems and avoidance technology has been supporting operators to safely operate machines in the field of mining and construction. At the same time, there are demands to set standards for machines and systems detecting, alerting and intervening to mitigate collision risk.

There are currently two existing standards in the field: ISO 16001 and ISO 17757. These standards provide guidance for visibility aids and object detection systems and for autonomous and semi-autonomous machines, however, there is currently no standard that describes collision risk awareness, warning signals and collision avoidance actions of the machinery operated by humans where there is a risk of collision.

Collision warning and avoidance systems are developing technologies; and the algorithms are not yet mature and well understood. This document is intended to foster innovation and accelerate the pace of improvements in new collision warning and avoidance technologies. The performance requirements of this document are technology neutral and do not specify technologies to meet the requirements.

The systems described in this document are intended to assist the operator of the machine. As current technologies are unable to achieve full collision warning/avoidance in every situation, the responsibility for safe operation of the machine remains with the operator of the machine.

This document defines a protocol for communication between a machine and a connected device to allow the connected device to command the machine to slow down, stop or to maintain a stationary state where the machine can move in a linear (i.e. forwards-backwards) direction along a travel path. Machines with rotational movements (e.g. excavators) and machines with compound movements (e.g. machines with booms) are only considered to the extent of the linear component of their travel.

The machine manufacturer may be flexible in deciding which method is most appropriate for their machine. Some applications can be delivered with basic functionality (e.g. without the use of registers). Regardless of which approach is selected, the connected device has a means to discover the capabilities of the machine.

Annex B outlines a mechanism for establishing trust between the machine and the connected device based on the exchange of certificates at the session layer as defined by the machine manufacturer. The message structure for the session layer can be different to the message structure defined in this document.

The specification of the J1939 protocol in this document does not preclude the development of other communication interfaces that can support collision warning and avoidance functionality. At the time of publishing this document, protocols have only been defined for SAE J1939 due to the general availability of CAN 2.0 interfaces on machinery and devices providing collision warning and avoidance functions.

© ISO 2021 – All rights reserved

Documents
Document Sharing Hub
Full document details: PD ISO/TS 21815-2:2021

Documents
Document Sharing Hub

# Earth-moving machinery — Collision warning and avoidance —

# Part 2: On-board J1939 communication interface

## 1 Scope

This document describes the on-board J1939 communication interface between a connected device and mobile machines for use in earth-moving, mining and road construction applications to enable interventional collision avoidance actions defined in ISO 21815-1 based on the SAE J1939 protocol. This interface is intended for use by a collision avoidance system (CAS) device integrated independently from the original machine providing intervention signals to slow down, stop or prevent motion of the machine. The protocol defined by this document can also be used to provide input information for a collision warning system (CWS).

This document is not intended for plug-and-play implementation of CAS or CWS on the machine. Additional details not fully described in this document can be negotiated by the CAS or CWS manufacturer and the machine manufacturer to enable functionality.

This document does not preclude the possibility of the machine manufacturer or the CxD manufacturer developing alternative on-board communication interfaces.

## 2 Normative references

The following documents are referred to in the text in such a way that some or all of their content constitutes requirements of this document. For dated references, only the edition cited applies. For undated references, the latest edition of the referenced document (including any amendments) applies.

ISO 19014-3, *Earth-moving machinery — Functional safety — Part 3: Environmental performance and test requirements of electronic and electrical components used in safety-related parts of the control system*

SAE J1939-15, *Reduced Physical Layer, 250 kbits/sec, UN-Shielded Twisted Pair (UTP)*

## 3 Terms and definitions

For the purposes of this document, the following terms and definitions apply.

ISO and IEC maintain terminological databases for use in standardization at the following addresses:

— ISO Online browsing platform: available at https://www.iso.org/obp

— IEC Electropedia: available at http://www.electropedia.org/

**3.1**
**collision warning system**
**CWS**
system which detects intended objects in the collision risk area, evaluates the collision risk level and provides a warning to the operator

[SOURCE: ISO 21815-1:—, 3.8]

© ISO 2021 – All rights reserved

Documents
Document Sharing Hub
Full document details: PD ISO/TS 21815-2:2021

**3.2**
**collision avoidance system**
**CAS**
system which detects intended objects in the collision risk area, evaluates the collision risk level and provides interventional collision avoidance *action* (3.9)

[SOURCE: ISO 21815-1:—, 3.9]

**3.3**
**CxS**
*CWS* (3.1) or *CAS* (3.2) or both

[SOURCE: ISO 21815-1:—, 3.10]

**3.4**
**CxS device**
**CxD**
proximity detection system
device with sensors providing *CxS* (3.3) functions to detect objects in the proximity of the machine, assess the collision risk level, warn the operator of the presence of object(s) for *CWS* (3.1), and/or provide signals to the machine control system to initiate the appropriate interventional collision avoidance *action* (3.9) on the machine for *CAS* (3.2)

Note 1 to entry: Proximity detection system (PDS) is a colloquial industry term for a physical device providing CWS or CAS functionality.

**3.5**
**on-board communication interface**
bi-directional connection between a *CxD* (3.4) and the machine in a *CWS* (3.1) or *CAS* (3.2)

Note 1 to entry: The *CxS* (3.3) may utilise information sent from the machine via the on-board communication interface to improve the estimation of the collision risk level. Only a CAS can initiate interventional collision avoidance *action* (3.9) over the on-board communication interface.

**3.6**
**register**
storage location on the machine side of the *on-board communication interface* (3.5) that may be read and optionally written to by the *CxD* (3.4)

Note 1 to entry: Changing the value of a register does not immediately initiate an interventional collision avoidance *action* (3.9).

**3.7**
**parameter**
type of *register* (3.6) that is used to store configuration information

EXAMPLE Software revision, timeout, max speed for emergency stop.

**3.8**
**setpoint**
type of *register* (3.6) that is used by the machine to respond to an interventional collision avoidance *action* (3.9)

EXAMPLE Minimum braking, maximum throttle, maximum speed.

**3.9**
**action**
message sent from the *CxD* (3.4) to the machine to change an internal *register* (3.6), or to initiate a machine function

EXAMPLE Reduce speed, apply brakes, inhibit motion.


© ISO 2021 – All rights reserved
Documents
Document Sharing Hub
Full document details: PD ISO/TS 21815-2:2021

**3.10**
**enquiry**
message sent from the *CxD* (3.4) to the machine to read an internal *register* (3.6), or request a machine capabilityEXAMPLE Slow down, emergency stop, controlled stop.

**3.11**
**instruction**
*action* (3.9) or *enquiry* (3.10) issued by the *CxD* (3.4)

**3.12**
**reply**
*response* (3.35) of the machine to an *instruction* (3.11) from the *CxD* (3.4)

**3.13**
**logical group**
grouping of related information or *instruction* (3.11) elements into a coherent message, sent from the *CxD* (3.4) to the machine or from the machine to the CxD over the *on-board communication interface* (3.5)

**3.14**
**+bat**
system voltage of the machine as defined by the machine manufacturer

Note 1 to entry: Typical voltages are 12 V or 24 V DC.

**3.15**
**key switch**
device used by the operator to turn on or turn off the machine

**3.16**
**isolator switch**
disconnect switch
device used by the operator to isolate the batteries or electrical supply to the machine

**3.17**
**+bat(switched)**
machine system level voltage that is turned on or off through the *key switch* (3.15)

**3.18**
**+bat(un-switched)**
voltage that is not affected by the state of the *key switch* (3.15), but is affected by the *isolator switch* (3.16)

**3.19**
**CxD harness**
auxiliary wiring between the machine connector and the *CxD* (3.4) connector

**3.20**
**CxD bus**
CAN-bus communication path between the machine and the *CxD* (3.4) terminated by 120 Ohm resistors at each end

**3.21**
**CxD branch**
machine-to-CxD bus or CxD-to-CxD bus wiring connection

**3.22**
**PowerOn()**
startup sequence for the machine that enables *CxD* (3.4) operation

© ISO 2021 – All rights reserved

Documents
Document Sharing Hub
Full document details: PD ISO/TS 21815-2:2021

**3.23**
**doNegotiation()**
automatic or semi-automatic process that verifies the credentials of the *CxD* (3.4) attached to the machine and returns permissions for the CxD to send commands to the machine and receive machine information

**3.24**
**enableTimeout()**
automatic process that enables an automatic timer that counts down to zero and sets a flag that there has been a communications error on the J1939 *on-board communication interface* (3.5)

**3.25**
**resetTimeout()**
automatic process that resets the automatic timer and clears the error flag indicating that the J1939 *on-board communication interface* (3.5) is functioning normally

**3.26**
**doEmergencyStop()**
automatic process that initiates an emergency stop on the machine

**3.27**
**doControlledStop()**
automatic process that initiates a controlled stop on the machine

**3.28**
**doSlowDown()**
automatic process that slows down the machine

**3.29**
**doStandDown()**
automatic process that brings the machine to a halted state

**3.30**
**doBypassPropulsion()**
instruction to bypass the propulsion system

**3.31**
**doApplyPropulsionSetpoints()**
activation of braking, throttle, speed *setpoint* (3.8) *registers* (3.6)

**3.32**
**doMotionInhibit()**
automatic process that prevents a machine from moving while stationary

**3.33**
**doNormalOperation()**
*instruction* (3.11) for the machine to continue with normal operation or return to normal operation

Note 1 to entry: This instruction has the effect of cancelling any other interventional collision avoidance *action* (3.9) that is already in progress.

**3.34**
**challenge**
unique message issued by the machine to the *CxD* (3.4) to which a valid *reply* (3.12) is expected

**3.35**
**response**
*reply* (3.12) by the *CxD* (3.4) to the *challenge* (3.34) issued by the machine to establish trust


© ISO 2021 – All rights reserved
Documents
Document Sharing Hub
Full document details: PD ISO/TS 21815-2:2021

# 4 Symbols and abbreviated terms

| | |
|---|---|
| PGN | parameter group number (see SAE J1939) |
| SPN | suspect parameter number (see SAE J1939) |
| 0xHH | 8-bit hexadecimal value in the range 0x00 to 0xFF |
| 0bB | 1-bit binary value in the range 0b0 to 0b1 |
| 0bBB… | N-bit binary value |

# 5 Logical interface

## 5.1 Logical groups

The logical connections for the on-board J1939 communication interface between the CxD and the machine are shown in Figure 1.

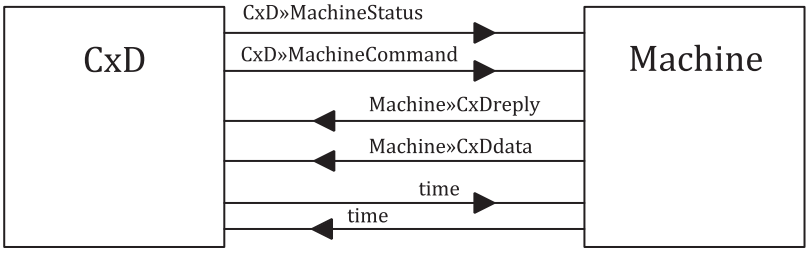


**Figure 1 — Overview of logical CxD-machine interface**

The logical groups defined for the on-board J1939 communication interface are:

— `CxD»MachineStatus` – this logical group of instructions allows the CxD to read or write to machine registers and detect the health of the communication interface.

NOTE 1 This logical group is used to provide machine status information to the CxD and allow the CxD to inspect and modify machine registers.

Information sent over this logical group may be sent at the maximum data rate supported by the machine.

— `CxD»MachineCommand` – instructions sent by CxD to machine to confirm or activate machine functions (e.g. slow down, stop, inhibit motion).

NOTE 2 This logical group is used to initiate interventional collision avoidance actions at the specified broadcast rate (see 7.3).

— `Machine»CxDreply` – response of machine to instructions sent by the CxD over `CxD»MachineStatus` or `CxD»MachineCommand`, which may include:

  — successful execution of the instruction;

  — an error was encountered while executing the instruction;

  — the instruction is not supported by the machine.

  The machine may limit the maximum data rate over the communication interface by delaying the response.

— `Machine»CxDdata` – data provided by machine to the CxD.

© ISO 2021 – All rights reserved

Documents
Document Sharing Hub
Full document details: PD ISO/TS 21815-2:2021

— `Time/Date` – information sent by machine to CxD or from CxD to machine to synchronise system clocks (see 7.10).

The enquiries and actions within each of these logical groups are described more fully in 5.2 to 5.4.

## 5.2 Negotiation

A higher level of sequence of negotiation and credentials may be used to protect the machine against access from an unauthorized CxD or connection of an unauthorised device to the interface. The negotiation sequence may be independently developed by the machine manufacturer and CxD supplier for exclusive use on a specific machine and may include:

— protocol version;

— machine model ID;

— machine generation / revision / series;

— other information defined by machine manufacturer and CxD manufacturer.

The CxD may pass credential information to the machine in a predefined sequence agreed between the CxD manufacturer and the machine manufacturer. Basic authentication methods are described in 7.2.3.1 (refer to NEGOTIATE_NOP description in Table 8).

A mechanism for establishing trust between the machine and the CxD is described in Annex B.

The machine may refuse to reply to or acknowledge all other instructions until after the negotiation sequence has been completed successfully.

Once negotiation has been successfully completed, the CxD shall send a PROTOCOL_NOP instruction within the specified maximum interval to avoid a timeout of the communication link.

## 5.3 Initialisation

After successful completion of the negotiation sequence, the CxD should read the contents of all registers defined on the machine and discover the capabilities of the machine using the mechanisms described in 7.2.

The CxD may read or write to registers after startup of the machine or at any time while the machine is running.

## 5.4 Operation

After negotiation and initialisation have been completed, the CxD may initiate interventional collision avoidance actions which are supported by the machine, including:

— motion inhibit;

— emergency stop;

— controlled stop;

— slow down;

— stand down;

— bypass propulsion;

— apply propulsion setpoints;

— no operation (NOP) – do nothing.


© ISO 2021 – All rights reserved
Documents
Document Sharing Hub
Full document details: PD ISO/TS 21815-2:2021

The machine may not support all interventional collision avoidance actions listed here. The CxD should discover the capabilities of the machine during initialisation.

Some interventional collision avoidance actions may require pre-conditions to be met, e.g. the machine is stationary before motion inhibit is applied, maximum machine speed for emergency stop, valid setpoint values provided by CxD.

Examples are shown for the PROPULSION subsystem only. Additional interventional collision avoidance actions may be defined in other subsystems.

# 6 Physical interface

## 6.1 General

The connection between the machine and the CxD is defined in 6.2 to 6.5.

The connectors specified in 6.2 to 6.5 can be unsuitable for the specific requirements of machines working in hazardous atmospheres. Alternative connector and connection arrangements may be used in these cases.

## 6.2 Machine connector

The physical connector on the machine shall be Deutsch DT-Series 12-pin plug part DT06-12SC-EP06 (Key C) shown in Figure 2 or equivalent[1]. The pin connections and pin definitions are shown in Table 1.

Dimensions in millimetres (inches)

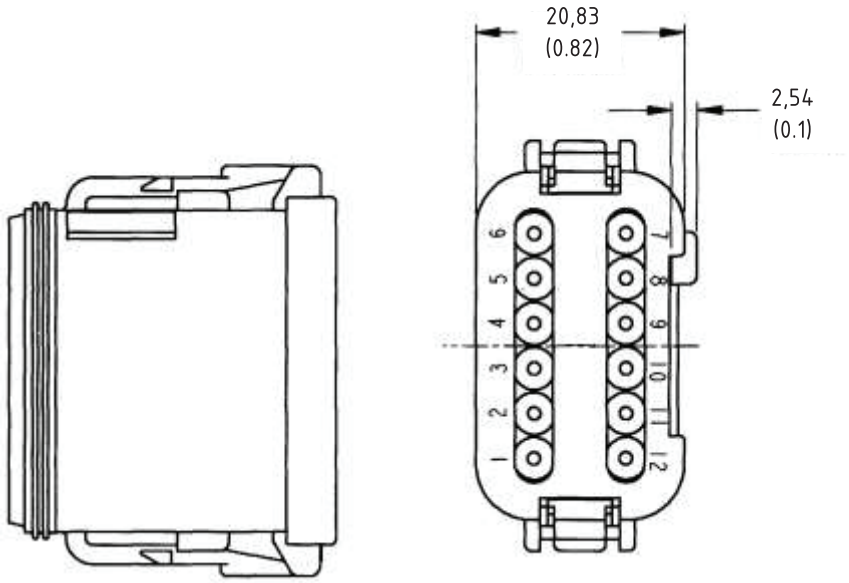


**Figure 2 — Machine physical connector - Deutsch DT-series 12 pin, part DT06-12SC-EP06 (Key C)**

1) Deutsch DT-Series 12-pin plug part DT06-12SC-EP06 (Key C) is an example of a suitable connector that is available commercially. This information is given for the convenience of users of this document and does not constitute an endorsement by ISO of this product.

© ISO 2021 – All rights reserved

Documents
Document Sharing Hub
Full document details: PD ISO/TS 21815-2:2021

**Table 1 — Machine pin connections**

| Pin | Machine | Comment |
|---|---|---|
| 1 | n/a | Reserved for future use by the ISO 21815 series |
| 2 | +bat(un-switched) | 10A (maximum) |
| 3 | -bat 0V/GND | Common ground, 0V from battery supply |
| 4 | +bat(switched) | 10 A (maximum) switched from ignition key |
| 5 | CAN HI | SAE J1939 CAN-bus (High) |
| 6 | CAN LO | SAE J1939 CAN-bus (Low) |
| 7 | n/a | Reserved for future use by the ISO 21815 series |
| 8 | n/a | Reserved for future use by the ISO 21815 series |
| 9 | n/a | Reserved for future use by the ISO 21815 series |
| 10 | n/a | Reserved for future use by the ISO 21815 series |
| 11 | Override A | Override switch (see Table 2) |
| 12 | Override B | Override switch (see Table 2) |

The maximum combined load from pin 2 and pin 4 shall not exceed 10 A. An alternative source of power should be obtained from the machine for CxS devices that exceed the combined requirements of pin 2 and pin 4.

NOTE For some machines the additional power requirement of the CxD can require modification to the machine electrical system (e.g. larger alternator, reduction in electrical loads, changes to wiring harness).

The +bat(switched) or +bat(un-switched) battery lines should not be routed around the isolator switch to connect directly to the battery.

The machine should provide protection for short circuit or overcurrent fault conditions on pin 2 and pin 4, e.g. circuit breaker, resettable fuse, fuseable link.

Alternate compatible connector body styles may be used depending on the preferred method of connection, e.g. bulkhead / chassis, in-line connection.

All unused cable entries and cavities should be plugged to preserve the IP rating of the connector.

## 6.3 CxD connector

The physical connector on the CxD shall be Deutsch DT-series 12-pin receptacle part DT04-12PC-BE02 (Key C) shown in Figure 3 or equivalent[2]. The pin connections are identical to the machine connector (see Table 1).

2) Deutsch DT-series 12-pin receptacle part DT04-12PC-BE02 (Key C) is an example of a suitable connector that is available commercially. This information is given for the convenience of users of this document and does not constitute an endorsement by ISO of this product.


© ISO 2021 – All rights reserved
Documents
Document Sharing Hub
Full document details: PD ISO/TS 21815-2:2021

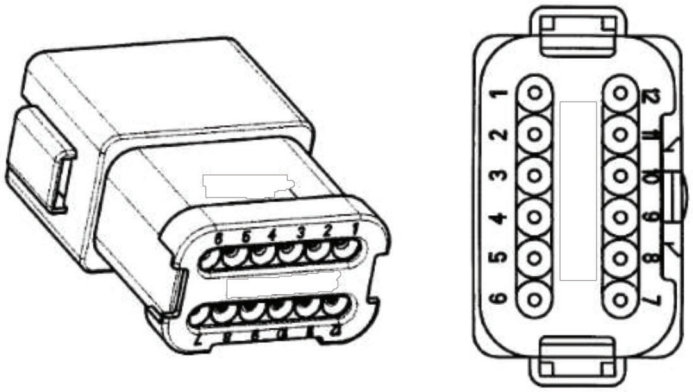

**Figure 3 — CxD physical connector - Deutsch DT-series 12 pin, part DT04-12PC-BE02 (Key C)**

The maximum combined load from pin 2 and pin 4 shall not exceed 10 A.

Alternate compatible connector body styles may be used depending on the preferred method of connection, e.g. bulkhead / chassis, in-line connection.

## 6.4 Override switch

An override signal may be implemented on the machine to notify the CxD that the operator has determined that the collision avoidance action may be overridden.

If provided by the machine, the override signal shall be implemented by parity switches connected to override A (pin 11) and override B (pin 12) with the states defined in Table 2.

**Table 2 — CxD Override switch**

| Override A<br>Pin 11 | Override B<br>Pin 12 | Value |
|---|---|---|
| Open | Open | Connection fault |
| Open | Closed | Override enabled |
| Closed | Open | Override disabled |
| Closed | Closed | External fault |
| **Key**<br>Closed short to 0V/GND<br>Open machine voltage (e.g. +bat) | | |

If provided by the machine, the maximum sinking load on either override A or override B shall be 1 A at the system voltage of the machine as defined by the machine manufacturer.

NOTE Typical voltages for +bat (un-switched) and +bat (switched) are 12 V or 24 V DC.

If provided by the machine, the override A and override B contacts shall be maintained in the closed state when the override signal is indeterminate (e.g. during the startup sequence).

The override signal can be provided by a momentary action change-over switch, relay contacts, low impedance electronic switch with de-bounce provisions, or other means. Refer to Annex C for example implementations of the override functionality.

Transient states lasting less than 100 ms shall be ignored by the CxD.

© ISO 2021 – All rights reserved

Documents
Document Sharing Hub
Full document details: PD ISO/TS 21815-2:2021

## 6.5 Physical layer

The physical layer shall comply with SAE J1939-15. Both the machine connector and the CxD connector shall be CxD branches from the CxD harness as shown in Figure 4.

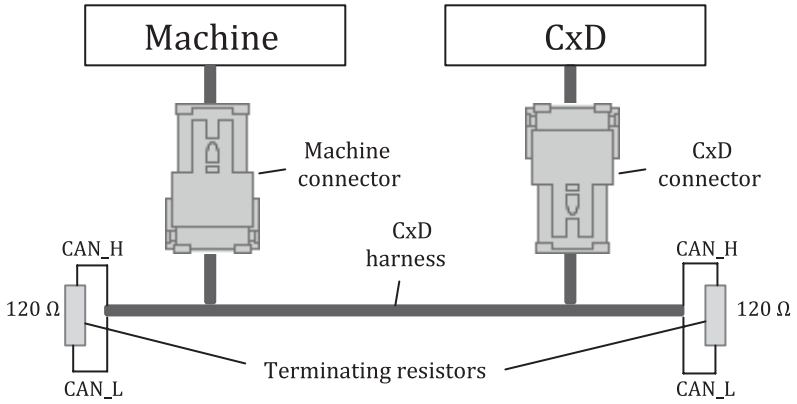


**Figure 4 — Physical layer**

The topology for the CxD harness should be a direct point to point connection with termination resistors at each end.

The CxD harness should be separated from the machine control bus by a suitable gateway.

The use of unshielded twisted pair (UTP) for the physical layer of the CxD harness shall meet the requirements defined in SAE J1939-15, including:

a) Connection of the CxD device to the CxD bus shall not exceed the maximum permitted number of nodes – typically 10 nodes maximum. The machine manufacturer shall state the number of nodes attached to the aux CxD bus in the factory default configuration of the machine.

b) Connection of the CxD device to the CxD bus shall not exceed the maximum physical bus length (40 m) and CxD branch limits (3 m). If the physical length of the CxD harness in the factory default configuration of the machine exceeds 1 m, the machine manufacturer shall state any physical limitations that should be taken into account before connection of the CxD.

The physical layer consisting of the CxD and CxD harness (e.g. conduit, braid, cable ways) shall meet the environmental protection requirements of ISO 19014-3.

# 7 J1939 communication protocol

## 7.1 General

The connections for the on-board communication interface between the CxD and machine shown in Figure 1 allows information to be passed between the CxD and the machine within the logical groups defined in Table 3. The functions provided within each logical group (for a specific subsystem, if specified) are shown in the right columns.


© ISO 2021 – All rights reserved
Documents
Document Sharing Hub
Full document details: PD ISO/TS 21815-2:2021

**Table 3 — Information passed via logical interface**

| Logical group | Description | Registers |
|---|---|---|
| `CxD»MachineStatus` | Actions and enquiries sent by CxD to machine that modify machine configuration | Status<br>Register index<br>Register select<br>Register value |
| `CxD»MachineCommand` | Actions and enquiries sent by CxD to machine that affect machine state | Command<br>Register index<br>Register select<br>Register value |
| `Machine»CxDreply` | Response of machine to CxD actions or enquiries | Status / Command<br>Register index<br>Register format<br>Register value |
| `Machine»CxDdata` | Data provided by machine to CxD | PROPULSION subsystem:<br>— Speed<br>— Direction<br>— Gear position<br>— Payload status<br>— Traction control<br>— Rollback status<br>— Manual override<br>— Machine pitch<br>— Machine roll |
| `Machine»CxDstatus` | Actions and enquiries sent by machine to CxD that modify CxD configuration | Reserved for future use by the ISO 21815 series |
| `Machine»CxDcommand` | Actions and enquiries sent by machine to CxD that affect CxD state | Reserved for future use by the ISO 21815 series |
| `CxD»MachineReply` | Response of CxD to machine actions or enquiries | Reserved for future use by the ISO 21815 series |
| `CxD»MachineData` | Data provided by the CxD to the machine | Reserved for future use by the ISO 21815 series |
| `TD` | Time/Date | SAE J1939 |

## 7.2 PGN:CxD»machine status

### 7.2.1 General

The structure of `PGN:CxD»MachineStatus` is shown in Figure 5. Additional details are provided in 7.2.2 and 7.2.3.

© ISO 2021 – All rights reserved

Documents
Document Sharing Hub
Full document details: PD ISO/TS 21815-2:2021

# PGN

## CxD»MachineStatus

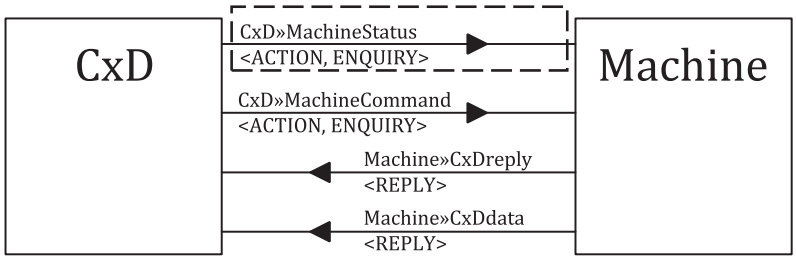


SPNs for **PGN:CxD»MachineStatus** (see Table 5)

| SPN | Offset (byte.bit) | SPN length |
|---|---|---|
| Status | 1.1 | 8 bits |
| Register Index[(a)] | 2.1 | 8 bits |
| Register Select[(b)] | 3.1 | 8 bits |
| Register Value_0 | 4.1 | 8 bits |
| Register Value_1 | 5.1 | 8 bits |
| Register Value_2 | 6.1 | 8 bits |
| Register Value_3 | 7.1 | 8 bits |
| Message Identifier | 8.1 | 8 bits |

Notes: (a) see 7.2.3.2
(b) see 7.2.3.3

Reserved SPN values (see Table 6)

| Code | MESSAGE_STATUS |
|---|---|
| 0xFA | GENERAL_FAULT |
| 0xFE | GENERAL_ERROR |
| 0xFF | IGNORE |

Note: Reserved SPN values may be used in bytes 2, 3 and only for registers with J1939 data format in bytes 4, 5, 6, 7. Reserved SPN values should not be used for the Message Identifier (byte 8).

Status

| 7 | 6 | 5 | 4 | 3 | 2 | 1 | 0 |
|---|---|---|---|---|---|---|---|

ENQUIRY

| 1 | SUB_SYSTEM |
|---|---|

ACTION

| 0 | SUB_SYSTEM |
|---|---|

SUB_SYSTEM

| | | | |
|---|---|---|---|
| 0 | 0 | 0 | PROPULSION |
| 0 | 0 | 1 | RESERVED_1 |
| 0 | 1 | 0 | RESERVED_2 |
| 0 | 1 | 1 | RESERVED_3 |
| 1 | 0 | 0 | RESERVED_4 |
| 1 | 0 | 1 | RESERVED_5 |
| 1 | 1 | 0 | USER_DEFINED |
| 1 | 1 | 1 | PROTOCOL |

Status (SUB_SYSTEM=PROTOCOL)

| 7 | 6 | 5 | 4 | 3 | 2 | 1 | 0 |
|---|---|---|---|---|---|---|---|

ENQUIRY

| 1 | 1 | 1 | 1 | 0 | ENQ7 |
|---|---|---|---|---|---|

ACTION

| 0 | 1 | 1 | 1 | 0 | ACT7 |
|---|---|---|---|---|---|

Status (SUB_SYSTEM=PROPULSION)

| 7 | 6 | 5 | 4 | 3 | 2 | 1 | 0 |
|---|---|---|---|---|---|---|---|

ENQUIRY

| 1 | 0 | 0 | 0 | RSV | ENQ0 |
|---|---|---|---|---|---|

ACTION

| 0 | 0 | 0 | 0 | RSV | ACT0 |
|---|---|---|---|---|---|

RSV - Reserved for future use

ENQ7 bitfield codes in PROTOCOL subsystem – **SPN:Status** (see Table 8)

| ENQ7 | Name |
|---|---|
| 0b000 | PROTOCOL_NOP |
| 0b001 | NEGOTIATE_NOP |
| 0b010 | NEGOTIATE_ENQ |
| 0b101 | GET_EXTENDED_REGISTER |
| 0b110 | GET_PROTOCOL_REGISTER |

ACT7 bitfield codes in PROTOCOL subsystem – **SPN:Status** (see Table 9)

| ACT7 | Name |
|---|---|
| 0b101 | RESET_REGISTERS |
| 0b110 | SET_PROTOCOL_REGISTER |

ENQ0 bitfield codes in PROPULSION subsystem – **SPN:Status** (see Table 10)

| ENQ0 | Name |
|---|---|
| 0b110 | GET_PROPULSION_REGISTER |

ACT0 bitfield codes in PROPULSION subsystem – **SPN:Status** (see Table 11)

| ACT0 | Name |
|---|---|
| 0b100 | LOAD_PROPULSION_SETPOINTS |
| 0b110 | SET_PROPULSION_REGISTER |

**Figure 5 — Structure of** `PGN:CxD»MachineStatus`

Refer to Annex A for typical communication sequences and Table A.1 and Table A.2 for examples of CxD instruction and machine responses.

### 7.2.2 PGN description

The CxD shall send status information to the machine via the PGN with the parameters shown in Table 4 and as defined in 7.2.3.


© ISO 2021 – All rights reserved
Documents
Document Sharing Hub
Full document details: PD ISO/TS 21815-2:2021

**Table 4 — `PGN:CxD»MachineStatus` parameters**

| Parameter | Description |
|---|---|
| PGN number | 61968 |
| PGN type | PDU2_FAST |
| Acronym | CXD1 |
| Data length | 8 bytes |
| Multipacket message | No |
| Broadcast rate | 10 ms[a] |
| Message priority | 3 |

[a] The machine manufacturer may limit the rate that instructions are executed over this PGN by delaying the reply via `PGN:Machine»CxDreply`.

This PGN is intended to be used by the CxD to transmit a burst of information to the machine not exceeding the specified broadcast rate.

The CxD may remain silent between bursts.

The CxD shall maintain the communication link in an active state by periodically sending a PROTOCOL_NOP instruction (see Table 8) to avoid a timeout when no other instructions are being sent.

The SPN's associated with `PGN:CxD»MachineStatus` are shown in Table 5.

**Table 5 — SPNs for `PGN:CxD»MachineStatus`**

| SPN | Offset (byte.bit) | SPN length | SPN Description |
|---|---|---|---|
| Status | 1.1 | 8 bits | Action or enquiry sent from CxD to the machine |
| Register index | 2.1 | 8 bits | Index to machine register |
| Register select | 3.1 | 8 bits | Used in conjunction with `SPN:RegisterIndex` to set TAG values that enable multiple matching setpoints to be executed via `PGN:CxD»MachineCommand`. |
| Register value_0 | 4.1 | 8 bits | Least significant byte of register value specified by `SPN:RegisterIndex` |
| Register value_1 | 5.1 | 8 bits | Next significant byte of register value specified by `SPN:RegisterIndex` |
| Register value_2 | 6.1 | 8 bits | Next significant byte of register value specified by `SPN:RegisterIndex` |
| Register value_3 | 7.1 | 8 bits | Most significant byte of register value specified by `SPN:RegisterIndex` |
| Message identifier | 8.1 | 8 bits | Identifier for message originated by the CxD e.g. incrementing counter |

NOTE Unless specified otherwise, least-significant-first byte ordering is used for multi-byte transfers with individual bytes preserving J1939 bit ordering (big-endian).

The standard SAE J1939 reserved codes (see Table 6) may be used in `SPN:RegisterIndex` (offset = 2), `SPN:RegisterSelect` (offset = 3) and where noted in 7.2.3. Generally, the reserved codes are used to indicate missing data or an error. The use of these reserved codes in `SPN:Status` (offset = 1) and `SPN:MessageIdentifier` (offset = 8) is not permitted.

© ISO 2021 – All rights reserved

Documents
Document Sharing Hub
Full document details: PD ISO/TS 21815-2:2021

**Table 6 — Reserved SPN values**

| Code | MESSAGE_STATUS |
|---|---|
| 0xFA | GENERAL_FAULT |
| 0xFE | GENERAL_ERROR |
| 0xFF | IGNORE |

Each SPN within `PGN:CxD»MachineStatus` is defined in more detail in 7.2.3.

### 7.2.3 SPN structure

#### 7.2.3.1 SPN:Status

##### 7.2.3.1.1 General

This SPN is used by the CxD to send an enquiry or action to a specified subsystem of the machine. Refer to Figure 6 for a description of the SUB_SYSTEM bitfield.

The typical negotiation, initialisation and operation message sequences for this SPN are described in Annex A.

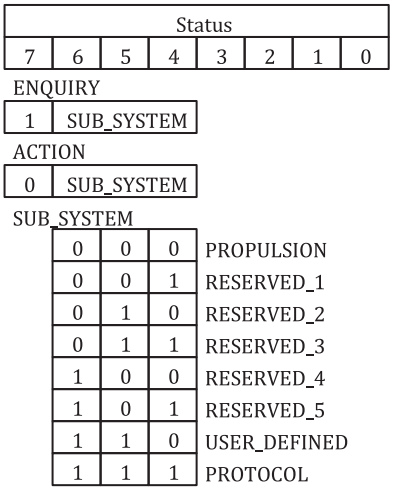


**Figure 6 — Subsystem bitfields in `SPN:Status`**

The valid enumerations for the SUB_SYSTEM bitfield are listed in Table 7.

NOTE The least significant 4-bits of `SPN:Status` are defined separately for each subsystem.

**Table 7 — SUB_SYSTEM bitfield codes**

| SUB_ SYS-TEM | Name | Description |
|---|---|---|
| 0b000 | PROPULSION | Propulsion subsystem |
| 0b001 | RESERVED_1 | Reserved for future use by the ISO 21815 series |
| 0b010 | RESERVED_2 | Reserved for future use by the ISO 21815 series |
| 0b011 | RESERVED_3 | Reserved for future use by the ISO 21815 series |
| 0b100 | RESERVED_4 | Reserved for future use by the ISO 21815 series |
| 0b101 | RESERVED_5 | Reserved for future use by the ISO 21815 series |
| 0b110 | USER_DEFINED | Available for customisation by the end user or application |
| 0b111 | PROTOCOL | Protocol subsystem |


© ISO 2021 – All rights reserved
Documents
Document Sharing Hub
Full document details: PD ISO/TS 21815-2:2021

#### 7.2.3.1.2 SUB_SYSTEM: PROTOCOL

The format of `SPN:Status` for the PROTOCOL subsystem is shown in Figure 7.

| Status (SUB_SYSTEM=PROTOCOL) | | | | | | | |
|---|---|---|---|---|---|---|---|
| 7 | 6 | 5 | 4 | 3 | 2 | 1 | 0 |
| ENQUIRY | | | | | | | |
| 1 | 1 | 1 | 1 | 0 | ENQ7 | | |
| ACTION | | | | | | | |
| 0 | 1 | 1 | 1 | 0 | ACT7 | | |

**Figure 7 — PROTOCOL subsystem bitfields –** `SPN:Status`

The valid enumerations of the bitfields in `SPN:Status` for the PROTOCOL subsystem are listed in Table 8 and Table 9.

**Table 8 — ENQ7 bitfield codes in PROTOCOL subsystem –** `SPN:Status`

| ENQ7 | Name | Description |
|---|---|---|
| 0b000 | PROTOCOL_<br>NOP | This enquiry is used by the CxD after successful completion of the negotiation sequence to indicate to the machine that the CxD is healthy when no other active instructions are being sent to the machine. The machine may silently ignore this enquiry if negotiation has not been completed successfully.<br>Use the NEGOTIATE_NOP enquiry to verify the connection between the CxD and the machine if negotiation has not been completed.<br>The machine may force the CxD to reinitiate the negotiation sequence if no valid instructions are sent within the time specified in register INSTRUCTION_TIMEOUT of the protocol subsystem. |
| 0b001 | NEGOTIATE_<br>NOP | This enquiry is used by the CxD to indicate to the machine that the CxD is active and ready to perform a negotiation with the machine and the machine shall provide information to the CxD on the current state of the interface.<br>The values in `SPN:RegisterIndex` and `SPN_RegisterSelect` and `SPN:RegisterValue0..3` are ignored for this enquiry and should be set to zero (0x00).<br>The machine shall always respond to a NEGOTIATE_NOP enquiry with the following information in `SPN:RegisterValue0..3`:<br>`RegisterValue0`: J1939 = INTERFACE_STATE<br>`RegisterValue1`: REG_FORMAT = format of a non-zero NEGOTIATION_SEED determined by the machine and NEGOTIATION_KEY to be provided by the CxD<br>`RegisterValue2`: UINT8 = Authentication method:<br>— 0x00: no authentication;<br>— 0x01: SEED/KEY combination;<br>— 0x02: SEED/KEY with tokenisation of commands;<br>— 0xE0-0xEF: user defined;<br>— other values reserved for future use by this document.<br>`RegisterValue3`: Reserved for future use by this document. |

© ISO 2021 – All rights reserved

Documents
Document Sharing Hub
Full document details: PD ISO/TS 21815-2:2021

**Table 8** *(continued)*

| ENQ7 | Name | Description |
|---|---|---|
| 0b010 | NEGOTIATE_ENQ | A higher level of sequence of negotiation and credentials may be used to protect the machine against access from an unauthorized CxD or connection of an unauthorised device to the interface. The negotiation sequence may be independently developed by the machine manufacturer and CxD supplier for exclusive use on a specific machine.<br><br>This enquiry may be used by the CxD to pass credential information to the machine in a predefined sequence agreed between the CxD and machine manufacturer.<br><br>The negotiation sequence may pass up to 32-bits per message using one of the formats specified in Table 36.<br><br>A generic example negotiation sequence starts with the CxD requesting the seed value for the negotiation from the machine by specifying `SPN:RegisterIndex` = NEGOTIATION_SEED.<br><br>The machine should respond with the non-zero seed value in `SPN:RegisterValue0..3` in the format indicated in the reply to the NEGOTIATE_NOP enquiry.<br><br>The CxD can then specify the matching key value expected by the machine in `SPN:RegisterValue0..3`. The machine should indicate if an error occurs by replying with the appropriate value in the REG_FORMAT bitfield (see Table 36). The machine should prevent a CxD attempting to discover a valid key using trial and error by refusing to reply to the NEGOTIATE_ENQ for a suitable period of time and returning a zero seed in response to the enquiry by the CxD with SPN:Register Index = NEGOTIATION_SEED.<br><br>Other variations of the negotiation sequence may pass the following information between the machine and the CxD:<br>— protocol version;<br>— machine model ID;<br>— machine generation / revision / series;<br>— other information defined by machine manufacturer and CxD supplier.<br><br>An example of a negotiation sequence based on exchange of certificates is described in Annex B.<br><br>The machine may refuse to reply to or acknowledge all actions or enquiries other than NEGOTIATE_NOP or NEGOTIATE_ENQ until the negotiation sequence has been completed successfully.<br><br>The machine may force the CxD to restart negotiation of its credentials if the negotiation sequence is not completed within the time specified in register NEGOTIATION_TIMEOUT of the protocol subsystem.<br><br>Where required by the machine manufacturer a token should be provided by the CxD for every command sent to the machine in a pseudo-random sequence via `PGN:CxD»MachineCommand`. The token sequence should be randomised by the initial seed provided by machine during the negotiation and ordered by a shared secret code that is known independently by the machine and the CxD. |
| 0b011 | RESERVED_3 | Reserved for future use by the ISO 21815 series. |
| 0b100 | RESERVED_4 | Reserved for future use by the ISO 21815 series. |
| 0b101 | GET_EXTENDED_REGISTER | This enquiry is used to access additional registers outside the 8-bit register index space accessible via GET_PROTOCOL_REGISTER (see below). The primary use of extended registers is to allow the full J1939 address space to be accessed indirectly as read-only registers if implemented by the machine manufacturer.<br><br>Extended registers can be selected by the 32-bit index range specified by: |


© ISO 2021 – All rights reserved
Documents
Document Sharing Hub
Full document details: PD ISO/TS 21815-2:2021

**Table 8** *(continued)*

| ENQ7 | Name | Description |
|---|---|---|
| | | — `SPN:RegisterValue0` – least significant byte<br>— `SPN:RegisterValue1`<br>— `SPN:RegisterValue2`<br>— `SPN:RegisterValue3` – most significant byte<br>The machine can indicate if this capability is available by returning the appropriate `SPN:Status/Command` in `PGN:Machine»CxDreply` (see Table 28 for responses).<br>NOTE 1: Registers in the extended index space have REG_TYPE = PARAMETER and REG_FORMAT = READ_ONLY and are common for all subsystems.<br>NOTE 2: The first 2048 registers in the 32-bit extended index range are mapped to the registers in subsystem address space:<br>— 0x00000000 – 0x000000FF (SUB_SYSTEM = 0)<br>— 0x00000100 – 0x000001FF (SUB_SYSTEM = 1)<br>— .<br>— 0x00011100 – 0x000111FF (SUB_SYSTEM = 7) |
| 0b110 | GET_ PROTOCOL_ REGISTER | This enquiry is used to read the protocol register at `SPN:RegisterIndex`.<br>The machine can indicate if this capability is available by returning the appropriate `SPN:Status/Command` in `PGN:Machine»CxDreply`. |
| 0b111 | RESERVED_7 | Reserved for future use by the ISO 21815 series. |

**Table 9 — ACT7 bitfield codes in PROTOCOL subsystem –** `SPN:Status`

| ACT7 | Name | Description |
|---|---|---|
| 0b000 | RESERVED_0 | Reserved for future use by the ISO 21815 series. |
| 0b001 | RESERVED_1 | Reserved for future use by the ISO 21815 series. |
| 0b010 | RESERVED_2 | Reserved for future use by the ISO 21815 series. |
| 0b011 | RESERVED_3 | Reserved for future use by the ISO 21815 series. |
| 0b100 | RESERVED_4 | Reserved for future use by the ISO 21815 series. |
| 0b101 | RESET_ REGISTERS | This action is used to reset all registers in the specified subsystem to the factory default settings specified by the manufacturer. The subsystem is defined by the SUB_SYSTEM bitfield in `SPN:RegisterSelect` (SELECT=SELECT_SUBSYSTEM).<br>The machine can indicate if this capability is available by returning the appropriate `SPN:Status/Command` in `PGN:Machine»CxDreply`. |
| 0b110 | SET_ PROTOCOL_ REGISTER | This action is used to set the value of the protocol register specified in `SPN:RegisterIndex` to `SPN:RegisterValue0..3`.<br>The machine can indicate if this capability is available by returning the appropriate `SPN:Status/Command` in `PGN:Machine»CxDreply`.<br>NOTE: The value in `SPN:RegisterSelect` is ignored for registers in the PROTOCOL subsystem. |
| 0b111 | RESERVED_7 | Reserved for future use by the ISO 21815 series. |

The machine shall reply to a NEGOTIATE_NOP enquiry issued by the CxD at the broadcast rate specified in Table 4. The machine may refuse to reply or acknowledge other enquiries or actions until negotiation has been completed successfully.

EXAMPLE

© ISO 2021 – All rights reserved

Documents
Document Sharing Hub
Full document details: PD ISO/TS 21815-2:2021

`SPN:Status` = 0xF2 (ENQUIRY, SUB_SYSTEM=PROTOCOL, ENQ7=NEGOTIATE_ENQ)

#### 7.2.3.1.3 SUB_SYSTEM: PROPULSION

The format of `SPN:Status` for the PROPULSION subsystem is shown in Figure 8.

| Status (SUB_SYSTEM=PROPULSION) | | | | | | | |
|---|---|---|---|---|---|---|---|
| 7 | 6 | 5 | 4 | 3 | 2 | 1 | 0 |
| ENQUIRY | | | | | | | |
| 1 | 0 | 0 | 0 | RSV | ENQ0 | | |
| ACTION | | | | | | | |
| 0 | 0 | 0 | 0 | RSV | ACT0 | | |

**Figure 8 — PROPULSION subsystem bitfields –** `SPN:Status`

The valid enumerations of the ENQ0, ACT0 and RSV bitfields in `SPN:Status` for the PROPULSION subsystem are shown in Table 10 to Table 12.

**Table 10 — ENQ0 bitfield codes in PROPULSION subsystem –** `SPN:Status`

| ENQ0 | Name | Description |
|---|---|---|
| 0b000 | RESERVED_0 | Reserved for future use by the ISO 21815 series. |
| 0b001 | RESERVED_1 | Reserved for future use by the ISO 21815 series. |
| 0b010 | RESERVED_2 | Reserved for future use by the ISO 21815 series. |
| 0b011 | RESERVED_3 | Reserved for future use by the ISO 21815 series. |
| 0b100 | RESERVED_4 | Reserved for future use by the ISO 21815 series. |
| 0b101 | RESERVED_5 | Reserved for future use by the ISO 21815 series. |
| 0b110 | GET_ PROPULSION_ REGISTER | This enquiry is used to read the propulsion register at `SPN:RegisterIndex`. The machine can indicate if this capability is available. |
| 0b111 | RESERVED_7 | Reserved for future use by the ISO 21815 series. |

**Table 11 — ACT0 bitfield codes in PROPULSION subsystem –** `SPN:Status`

| ACT0 | Name | Description |
|---|---|---|
| 0b000 | RESERVED_0 | Reserved for future use by the ISO 21815 series. |
| 0b001 | RESERVED_1 | Reserved for future use by the ISO 21815 series. |
| 0b010 | RESERVED_2 | Reserved for future use by the ISO 21815 series. |
| 0b011 | RESERVED_3 | Reserved for future use by the ISO 21815 series. |


© ISO 2021 – All rights reserved
Documents
Document Sharing Hub
Full document details: PD ISO/TS 21815-2:2021

**Table 11** *(continued)*

| ACT0 | Name | Description |
|---|---|---|
| 0b100 | LOAD_ PROPULSION_ SETPOINTS | This action is used in conjunction with `SPN:RegisterSelect` (SELECT= IMMEDIATE, UPDATE_AND_APPLY, APPLY_FROM_LIST, LOOKUP_INDIRECT, MATCH_TAG) to set the value of one or more propulsion setpoints as specified by the values of `SPN:RegisterValue0..3` (see Figure 12).<br>This action does not result in setpoints being immediately applied on the machine.<br>The setpoints affected by this action are temporarily flagged by the machine in preparation for an APPLY_PROPULSION_ SETPOINTS_CONFIRM enquiry and an APPLY_PROPULSION_ SETPOINTS action to be issued by the CxD.<br>The capability of the machine to apply the intended intervention action may be tested using the CHK0=APPLY_PROPULSION_SETPOINTS_ CONFIRM enquiry (see Table 24) and then executed using the XEQ0=APPLY_ PROPULSION_ SETPOINTS action (see Table 25).<br>The temporary flag on the affected setpoints is removed by any of the following actions issued by the CxD:<br>— a new ACT0=LOAD_PROPULSION_SETPOINTS action;<br>— a ACT0=SET_PROPULSION_REGISTER action;<br>— a ACT7=RESET_REGISTERS action on the PROPULSION subsystem (see Table 9);<br>— an XEQ0=APPLY_PROPULSION_SETPOINTS action (see Table 25).<br>The machine has the opportunity to validate any particular combination of setpoints that are specified by the CxD. The 2-step sequence is for the CxD to load the setpoints via `SPN:Status` using the action ACT0= LOAD_PROPULSION_SETPOINTS (see Table 11) then checking if the values are valid via `SPN:Command` using the enquiry CHK0=APPLY_PROPULSION_SETPOINTS_CONFIRM (see Table 24). The machine may reply to the enquiry with APPLY_PROPULSION_SETPOINTS_CONFIRM_ACK or ENQUIRY_ERROR.<br>The machine can indicate if this capability is available by returning the appropriate `SPN:Status/Command` in `PGN:Machine»CxDreply`. |
| 0b101 | RESERVED_5 | Reserved for future use by the ISO 21815 series. |
| 0b110 | SET_ PROPULSION_ REGISTER | This action is used in conjunction with `SPN:RegisterSelect` (SELECT= SELECT_REGISTER, SELECT_AND_TAG) to set the value of the propulsion register specified in `SPN:RegisterIndex` to `SPN:RegisterValue0..3`.<br>The machine can indicate if this capability is available by returning the appropriate `SPN:Status/Command` in `PGN:Machine»CxDreply`.<br>The TAG bitfield (see 7.2.3.3) may optionally be specified for registers with REG_TYPE = SET_POINT (see Table 34) to allow multiple setpoints to be executed via `PGN:CxD»MachineCommand`. |
| 0b111 | RESERVED_7 | Reserved for future use by the ISO 21815 series. |

**Table 12 — RSV bitfield codes in PROPULSION subsystem –** `SPN:Status`

| RSV | Name | Description |
|---|---|---|
| 0b0 | - | Reserved for future use by the ISO 21815 series. |
| 0b1 | - | Reserved for future use by the ISO 21815 series. |

© ISO 2021 – All rights reserved

Documents
Document Sharing Hub
Full document details: PD ISO/TS 21815-2:2021

### 7.2.3.2 SPN:RegisterIndex

#### 7.2.3.1.4 General

This SPN contains the index of a machine register to be referenced by `SPN:RegisterSelect` and `SPN:RegisterValue0..3` (see 7.3.3.3 and 7.3.3.4). The interpretation of this SPN is controlled by the SUB_SYSTEM bitfield in `SPN:Status`.

The reserved message status codes (see Table 6) may be used for this SPN if registers have not been implemented on the machine.

The common index values including the protocol revision register and several registers to allow a CxD to sequentially discover the index values of registers defined in each subsystem are shown in Table 13.

**Table 13 — Register index (all subsystems)**

| INDEX | Name | Description |
|---|---|---|
| 0xF0 | PROTOCOL_ REVISION | Index of register identifying the revision of the ISO/TS 21815-2 protocol implemented by the CxD in `SPN:RegisterValue0..3` in the following format:<br>— `SPN:RegisterValue0` – revision number of this document<br>— `SPN:RegisterValue1` – amendment number of this document<br>— `SPN:RegisterValue2` – major revision (user defined)<br>— `SPN:RegisterValue3` – minor revision (user defined)<br>The format should correspond to the format information returned in `SPN:RegisterFormat` in the reply from the machine:<br>— REG_TYPE = PARAMETER<br>— REG_ATTRIB = READ_WRITE<br>— REG_FORMAT = CHAR4<br>The initial revision and amendment numbers on publication of this document are:<br>— `SPN:RegisterValue0` = 0x01 (revision)<br>— `SPN:RegisterValue1` = 0x00 (amendment)<br>The machine should reply with the version of the ISO/TS 21815-2 protocol implemented on the machine in `SPN:RegisterValue0..3`.<br>The machine can indicate if this register is available by returning REG_DEF = DEFINED in `SPN:RegisterFormat` in `PGN:Machine»CxDreply`. |
| 0xF1 | REGISTER_ COUNT | Total number of registers in the subsystem specified by the SUB_SYSTEM bitfield of `SPN:Status` supplied by the CxD and the machine replying with the value in `SPN:RegisterValue0..1` using the format in `SPN:RegisterFormat`:<br>— REG_TYPE = PARAMETER<br>— REG_ATTRIB = READ_ONLY<br>— REG_FORMAT = USHORT16<br>The machine can indicate if this register is available by returning REG_DEF = DEFINED in `SPN:RegisterFormat` in `PGN:Machine»CxDreply`. |
| 0xF2 | FIRST_ REGISTER | Index of the first register in subsystem specified by the SUB_SYSTEM bitfield of `SPN:Status` supplied by the CxD and the machine replying with the value in `SPN:RegisterValue0..1` using the format in `SPN:RegisterFormat`: |


© ISO 2021 – All rights reserved
Documents Document Sharing Hub
Full document details: PD ISO/TS 21815-2:2021