PD ISO/TS 22239-1:2018

BSI Standards Publication

Road vehicles — Child seat presence and orientation detection system (CPOD)

Part 1: Specifications and test methods

Documents
Document Sharing Hub

Full document details: PD ISO/TS 22239-1:2018

National foreword

This Published Document is the UK implementation of ISO/TS 22239-1:2018.

The UK participation in its preparation was entrusted to Technical Committee AUE/7, Automobile occupant restraint systems.

A list of organizations represented on this committee can be obtained on request to its secretary.

This publication does not purport to include all the necessary provisions of a contract. Users are responsible for its correct application.

© The British Standards Institution 2018
Published by BSI Standards Limited 2018

ISBN 978 0 580 94116 0

ICS 43.040.80

Compliance with a British Standard cannot confer immunity from legal obligations.

This Published Document was published under the authority of the Standards Policy and Strategy Committee on 30 June 2018.

Amendments/corrigenda issued since publication

Date	Text affected

Documents
Document Sharing Hub

Full document details: PD ISO/TS 22239-1:2018

TECHNICAL SPECIFICATION

ISO/TS 22239-1

Second edition
2018-05-01

Road vehicles — Child seat presence and orientation detection system (CPOD) —

Part 1: Specifications and test methods

Véhicules routiers — Système de détection de la présence d'un siège enfant et de son orientation (CPOD) —

Partie 1: Spécifications et méthodes d'essai

Reference number
ISO/TS 22239-1:2018(E)

Documents
Document Sharing Hub

© ISO 2018

Full document details: PD ISO/TS 22239-1:2018

COPYRIGHT PROTECTED DOCUMENT

© ISO 2018, Published in Switzerland

All rights reserved. Unless otherwise specified, no part of this publication may be reproduced or utilized otherwise in any form or by any means, electronic or mechanical, including photocopying, or posting on the internet or an intranet, without prior written permission. Permission can be requested from either ISO at the address below or ISO's member body in the country of the requester.

ISO copyright office
Ch. de Blandonnet 8 • CP 401
CH-1214 Vernier, Geneva, Switzerland
Tel. +41 22 749 01 11
Fax +41 22 749 09 47
copyright@iso.org
www.iso.org

© ISO 2018 – All rights reserved

Documents
Document Sharing Hub

Full document details: PD ISO/TS 22239-1:2018

Contents

Page

Foreword ... **iv**
Introduction ... **v**
1 Scope ... **1**
2 Normative references ... **1**
3 Terms and definitions ... **1**
4 Abbreviated terms ... **3**
5 Principle ... **3**
5.1 General ... 3
5.2 Compatibility ... 4
6 System functionality ... **6**
7 Design recommendations ... **8**
7.1 General ... 8
7.2 Installation of CPOD resonators into the CRS ... 8
7.3 Installation of CPOD sensors into passenger seats ... 11
8 Design requirements ... **12**
8.1 Requirements for CPOD child seats ... 12
8.2 Requirements for CPOD passenger seats ... 13
8.2.1 Passenger seat design ... 13
8.2.2 CPOD sensor ... 13
8.2.3 Operating range for CPOD passenger seats ... 13
9 Compatibility measurements ... **13**
9.1 General specification ... 13
9.2 Compatibility test parameters range ... 14
9.3 Adjustment of backrest inclination ... 14
9.3.1 Adjustment of CTB backrest angle, α ... 14
9.3.2 Adjustment of passenger seat backrest angle, φ ... 15
9.4 Compatibility measurements for the CRS ... 16
9.4.1 General compatibility test description ... 16
9.4.2 Compatibility test (Part 1) ... 17
9.4.3 Compatibility test (Part 2) ... 19
9.4.4 CRS functional test ... 21
9.5 Compatibility measurements for passenger seats ... 22
9.5.1 General test description ... 22
9.5.2 Determination of passenger-seat-specific detection/failsafe area ... 26
9.5.3 Compatibility test procedure for passenger seats ... 29
9.5.4 Test result interpretation ... 30
10 Labelling ... **30**
Annex A (normative) **Determination of the passenger seat reference point (CRP)** ... **32**
Annex B (normative) **Geometrical descriptions** ... **34**
Annex C (normative) **Detailed specification of the CPOD system functionality** ... **38**
Annex D (normative) **CPOD child seat compatibility test bench** ... **49**
Annex E (normative) **CPOD passenger seat compatibility test device** ... **61**
Annex F (normative) **Additional definitions** ... **65**
Annex G (normative) **Magnetic coupling factor measurement procedure** ... **70**
Bibliography ... **76**

Documents
Document Sharing Hub

© ISO 2018 – All rights reserved

Full document details: PD ISO/TS 22239-1:2018

Foreword

ISO (the International Organization for Standardization) is a worldwide federation of national standards bodies (ISO member bodies). The work of preparing International Standards is normally carried out through ISO technical committees. Each member body interested in a subject for which a technical committee has been established has the right to be represented on that committee. International organizations, governmental and non-governmental, in liaison with ISO, also take part in the work. ISO collaborates closely with the International Electrotechnical Commission (IEC) on all matters of electrotechnical standardization.

The procedures used to develop this document and those intended for its further maintenance are described in the ISO/IEC Directives, Part 1. In particular the different approval criteria needed for the different types of ISO documents should be noted. This document was drafted in accordance with the editorial rules of the ISO/IEC Directives, Part 2 (see www.iso.org/directives).

Attention is drawn to the possibility that some of the elements of this document may be the subject of patent rights. ISO shall not be held responsible for identifying any or all such patent rights. Details of any patent rights identified during the development of the document will be in the Introduction and/or on the ISO list of patent declarations received (see www.iso.org/patents).

Any trade name used in this document is information given for the convenience of users and does not constitute an endorsement.

For an explanation on the voluntary nature of standards, the meaning of ISO specific terms and expressions related to conformity assessment, as well as information about ISO's adherence to the World Trade Organization (WTO) principles in the Technical Barriers to Trade (TBT) see the following URL: www.iso.org/iso/foreword.html.

This document was prepared by Technical Committee ISO/TC 22, *Road vehicles*, Subcommittee SC 36, *Safety and impact testing*.

This second edition cancels and replaces the first edition (ISO/TS 22239-1:2009), which has been technically revised to take into account the development in technology since the first edition was published.

A list of all parts in the ISO/TS 22239 series can be found on the ISO website.

© ISO 2018 – All rights reserved
Documents
Document Sharing Hub
Full document details: PD ISO/TS 22239-1:2018

Introduction

This document specifies a detection system for the automatic recognition of child seat presence and orientation detection system (CPOD) child seats placed on CPOD passenger seats.

The purpose of this detection system is to improve the overall safety performance of passenger restraint systems, particularly by reducing the risk of an airbag being deployed against a child seat placed on a passenger seat.

The CPOD system is not intended to encourage the placing of children on the front passenger seats of cars. However, in view of the fact that the following scenarios do occur in real life, children can be placed on front passenger seats in these cases:

— in 2-seater vehicles, which have no rear seats;

— when there are more than 2 or 3 children in one vehicle;

— when back seats are folded down for the transport of cargo;

— when the installation of a rearward-facing child restraint system (CRS) and the placing of the child in the CRS on the rear seats is very difficult or impossible, e.g. in 2-door vehicles;

— when the driver wants to see the baby and have easy access to it.

There might be benefit to be gained by encouraging the use of airbags on rear seats.

For the cases cited above, CPOD technology offers a reliable automatic solution for the protection of children against any possible risk caused by non-deactivated airbags.

© ISO 2018 – All rights reserved

Documents
Document Sharing Hub
Full document details: PD ISO/TS 22239-1:2018

This page deliberately left blank

Documents
Document Sharing Hub

Full document details: PD ISO/TS 22239-1:2018

TECHNICAL SPECIFICATION **ISO/TS 22239-1:2018**

Road vehicles — Child seat presence and orientation detection system (CPOD) —

Part 1: Specifications and test methods

1 Scope

This document specifies a child seat presence detection system that enables child seats placed on any passenger seats to be automatically detected where a child is at risk from an active airbag. The system provides the option of using additional information about the orientation of the child seat.

This document specifies the minimum functional requirements in order to ensure compatibility between child seat presence and orientation detection system (CPOD) child seats and CPOD passenger seats. Compatibility measurements and labelling requirements complement the obligatory specifications of this document.

This document also provides design recommendations which are not compulsory when claiming compliance with ISO/TS 22239. However, these recommendations, based on experience of proven designs, provide useful guidance to designers to avoid erroneous designs and thus, enable designers to reduce time and cost of CPOD development.

The tell-tale "child seat detected" required for a CPOD vehicle, the specific labelling required for a CPOD vehicle and CPOD child seat and the detailed information about the CPOD system functionality required for owner's manuals of CPOD vehicles and CPOD child seats will mitigate considerably the misuse probability. The document does not provide a failsafe physical mechanism that prevents the installation of non-CPOD child seats in a CPOD vehicle or vice versa.

ISO/TS 22239 applies only to child restraint systems in which the child is orientated in the forward or rearward driving direction.

NOTE 1 Throughout this document, the term "child seat" is used as an abbreviation of "CPOD child seat".

NOTE 2 Throughout this document, the term "passenger seat" is used as an abbreviation of "CPOD-equipped passenger seat".

2 Normative references

The following documents are referred to in the text in such a way that some or all of their content constitutes requirements of this document. For dated references, only the edition cited applies. For undated references, the latest edition of the referenced document (including any amendments) applies.

ISO 6549:1999, *Road vehicles — Procedure for H- and R-point determination*

ISO/TS 22239-2:2018, *Road vehicles — Child seat presence and orientation detection system (CPOD) — Part 2: Resonator specification*

ISO/TS 22239-3:2017, *Road vehicles — Child seat presence and orientation detection system (CPOD) — Part 3: Labelling*

3 Terms and definitions

For the purposes of this document, the following terms and definitions apply.

© ISO 2018 – All rights reserved

Documents
Document Sharing Hub
Full document details: PD ISO/TS 22239-1:2018

ISO and IEC maintain terminological databases for use in standardization at the following addresses:

— IEC Electropedia: available at http://www.electropedia.org/

— ISO Online browsing platform: available at https://www.iso.org/obp

3.1
child seat presence and orientation detection system
CPOD
radio frequency identification (RFID) system delivering information on the presence, orientation and type of a child seat

3.2
passenger seat reference point
CRP
point located on the centre line of the passenger seat, determined by the procedure in Annex A

3.3
child seat reference point
CRC
point identical to the intersection of the centre plane of the child restraint system and the CR axis

Note 1 to entry: The CR axis is shown in Figure D.7.

3.4
resonator reference point
RRP
point located in the geometrical centre of the base surface of the resonator

3.5
resonator pair reference point
RPRP
point located in the centre between two *resonator reference points* (3.4)

3.6
reference coordinate system
Cartesian coordinate system associated with the passenger seat and the compatibility test bench, having its origin in the *passenger seat reference point* (3.2), as shown in Figure B.4

3.7
CPOD detection area
three-dimensional area above the passenger seat cushion, where all relevant child seat information needed to adapt the airbag deployment are transmitted to the restraint control module, provided that the *resonator pair reference point* (3.5) is located within this area

3.8
CPOD failsafe area
three-dimensional area above the passenger seat cushion, where either all relevant child seat information needed to adapt the airbag deployment or information indicating an incorrect positioning of the child seat is transmitted to the restraint control module, provided that the *resonator pair reference point* (3.5) is located within this area

3.9
ISOFIX
system for the connection of child restraint systems to vehicles which has two rigid anchorages in a vehicle seating position located near the seat bight, corresponding rigid attachments on the child restraint system, and a means to limit the pitch rotation of the CRS

[SOURCE: ISO 13216-1:1999, 3.6]

© ISO 2018 – All rights reserved
Documents
Document Sharing Hub
Full document details: PD ISO/TS 22239-1:2018

4 Abbreviated terms

CPOD	child seat presence and orientation detection system
CRC	child seat reference point
CRP	passenger seat reference point
CRS	child restraint system
CTB	compatibility test bench
ECU	electronic control unit
FFCS	forward facing child sea
PSCTD	passenger seat compatibility test device
RCM	restraint control module (electronic unit controlling deployment of supplemental restraints)
RFCS	rearward facing child seat
RFID	radio frequency identification
RMI	restraint system malfunction indicator (vehicle-manufacturer-specific)
RPRP	resonator pair reference point
RRP	resonator reference point

5 Principle

5.1 General

CPOD is an RFID sensing system which is capable of determining the presence and orientation of a CRS placed on a passenger seat. Depending on the positioning of the CRS, different types of information are transmitted to the RCM.

If the CRS is correctly placed on the passenger seat such that its RPRP is located within the CPOD detection area (see 3.7), the CRS is detected by the system.

If the CRS is placed outside of the CPOD detection area but within the CPOD failsafe area (see 3.8), the system either detects the CRS or recognizes an incorrect CRS positioning.

The gathered information is sent to the central RCM, which enables the adaptation of the airbag deployment specific to the occupancy situation.

NOTE The specifications of this document are in compliance with Reference [7].

© ISO 2018 – All rights reserved

Documents
Document Sharing Hub
Full document details: PD ISO/TS 22239-1:2018

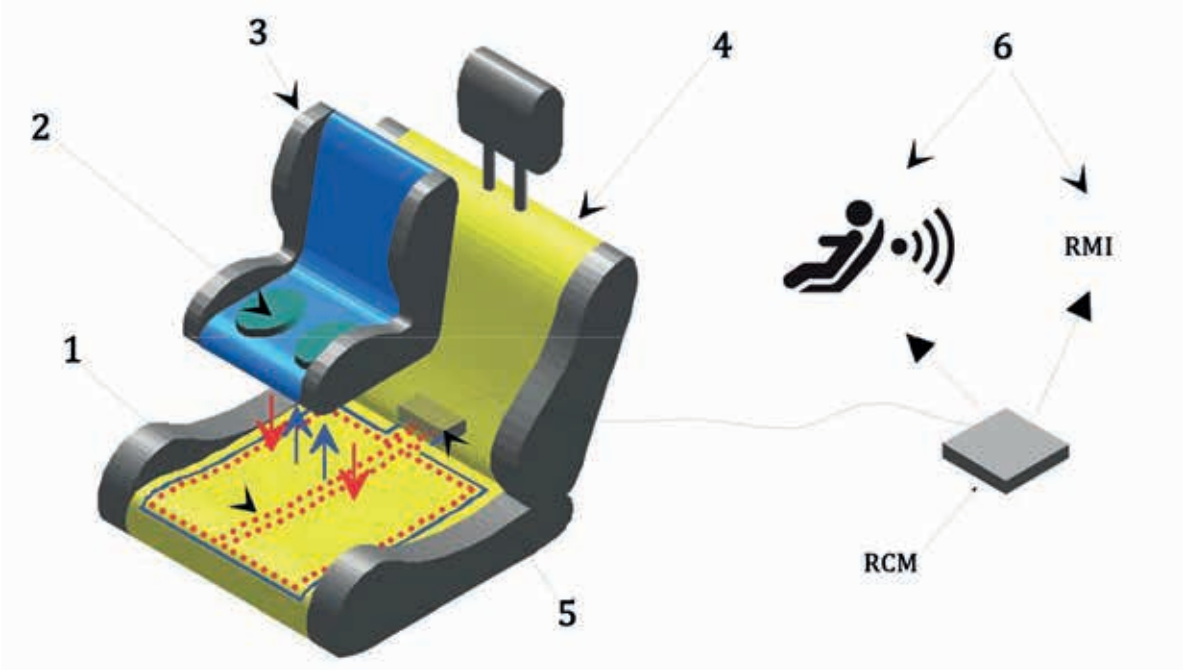

Key

1 CPOD sensor consisting of:

one transmitting antenna

two receiving antennas

2 CPOD resonators

3 CPOD child seat

4 passenger seat

5 CPOD electronics

6 in-vehicle information

Figure 1 — CPOD system topology

5.2 Compatibility

The compatibility of the system is given if the CPOD component compatibility checks have been passed. These compatibility checks consist of the following parts:

a) CRS compatibility check to verify the performance of the CRS design;

b) resonator compatibility check to verify the electrical performance of the resonators;

c) passenger seat compatibility check to verify the performance of passenger seat and CPOD sensor design.

The flow chart in Figure 2 shows how these compatibility checks fit together to assure the CPOD compatibility of the entire system.

© ISO 2018 – All rights reserved
Documents
Document Sharing Hub
Full document details: PD ISO/TS 22239-1:2018

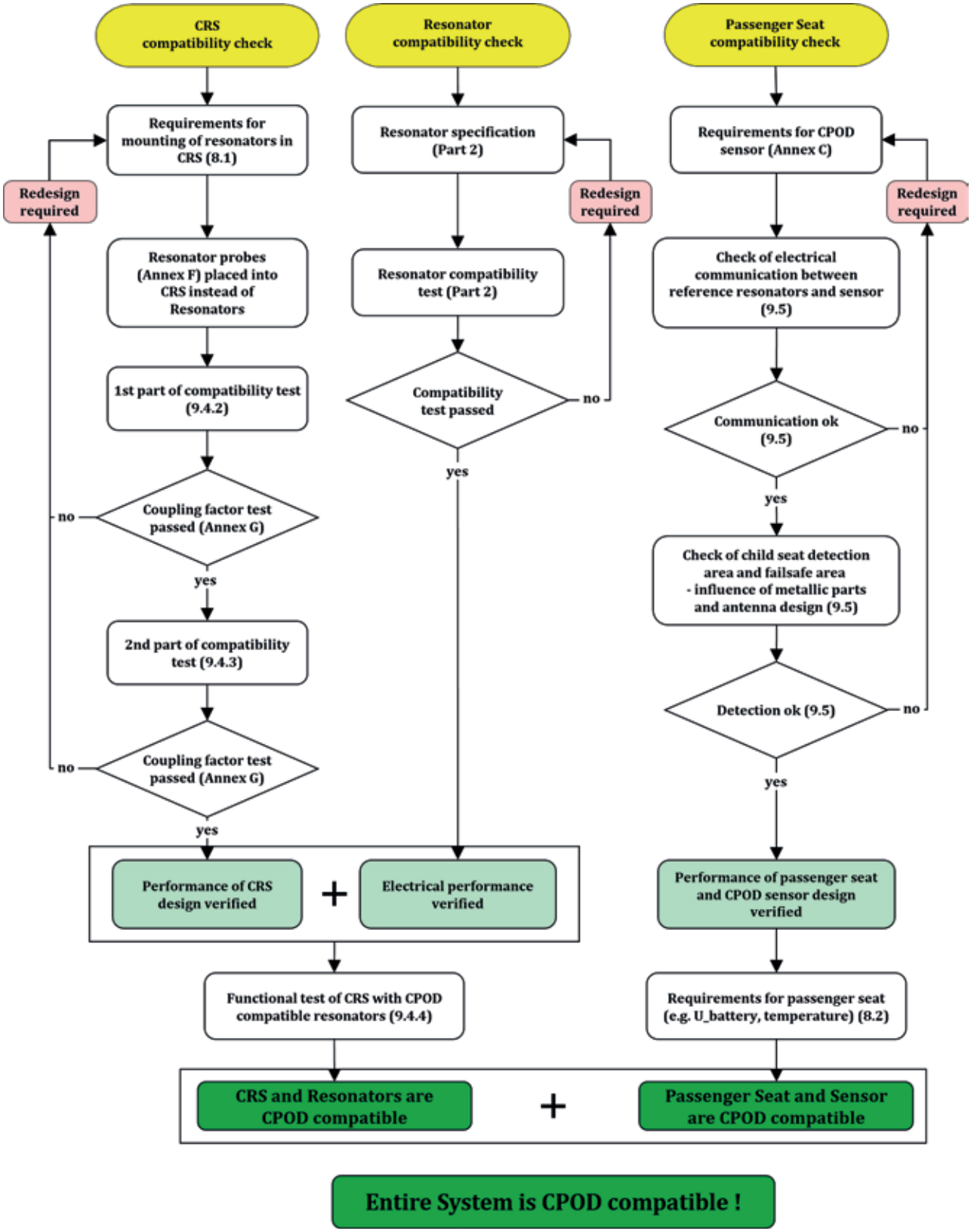

Figure 2 — Main steps for obtaining the CPOD compatibility of the entire system

© ISO 2018 – All rights reserved

Documents
Document Sharing Hub
Full document details: PD ISO/TS 22239-1:2018

6 System functionality

In order to achieve its performance and, in addition, to provide failsafe behaviour in case of an error, the following features are implemented in the CPOD system:

— generation of a sinusoidal signal in the 130 kHz band for contact-less energy and information transmission;

— adaptation of the transmitting signal to different environmental conditions by variation of frequency and amplitude;

— demodulation of the signal phase modulated by the CRS resonators;

— monitoring of the power and demodulation circuits of the system via integrated self-diagnosis;

— interface to RCM for transmission of CPOD data;

— monitoring of transmitting and receiving antennas for disconnections and short circuits;

— detection of the presence of CRS which is compliant with this document;

— detection of the orientation of CRS which is compliant with this document in vehicles where the orientation of the CRS impacts the airbag deployment.

Examples of CRS orientations are given in Figures 3 to 5.

Compliance with the detailed system functionality specifications of Annex C shall be provided.

Figure 3 — CRS in forward facing position

© ISO 2018 – All rights reserved
Documents
Document Sharing Hub
Full document details: PD ISO/TS 22239-1:2018

Figure 4 — CRS in rearward facing position

Figure 5 — Example of CRS wrongly positioned

Depending on the positioning of the CRS, the CPOD system delivers the information to the RCM as shown in Figure 6, provided that the RPRP is located within the CPOD detection area.

© ISO 2018 – All rights reserved

Documents
Document Sharing Hub
Full document details: PD ISO/TS 22239-1:2018

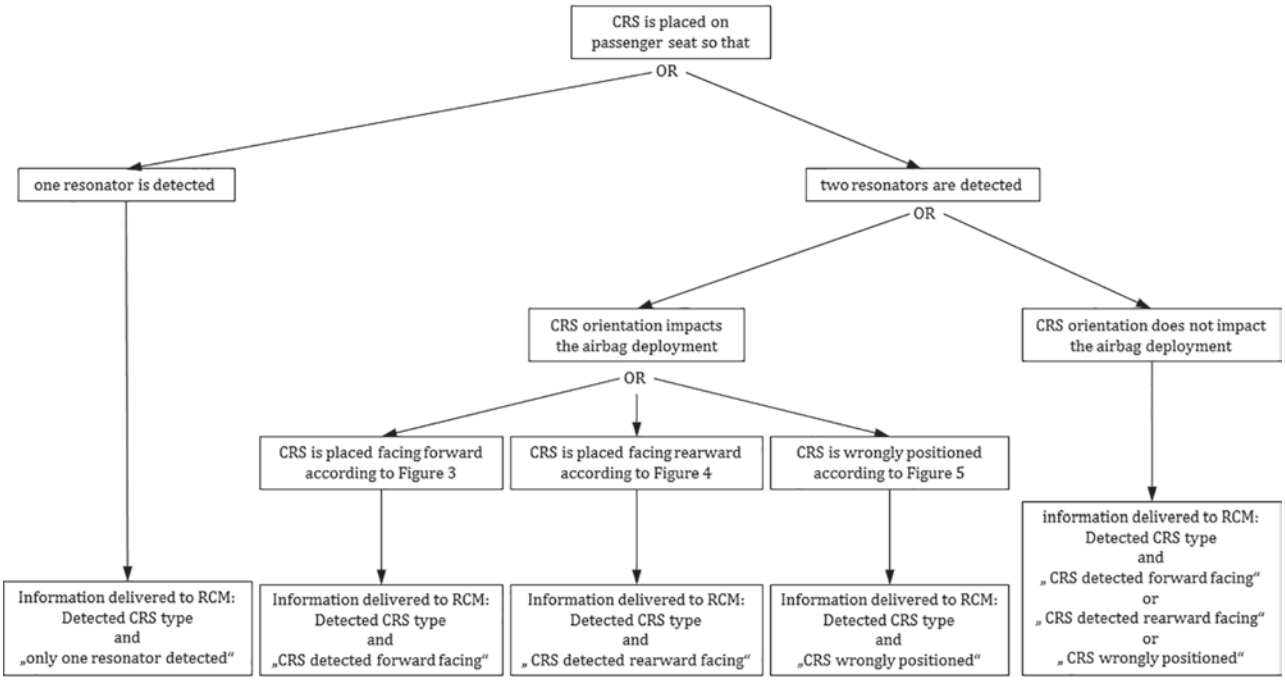

Figure 6 — Information to be submitted to the RCM

7 Design recommendations

7.1 General

In order to maximize the chance of passing the compatibility measurements successfully, the following recommendations should be respected during the design of CRSs and passenger seats fitted with CPOD.

7.2 Installation of CPOD resonators into the CRS

7.2.1 Electroconductive materials might have an influence on the resonator detection in the CRS. Therefore, the distance between large electroconductive materials and the resonators in the CRS should be maximized during the design of the CRS.

The detection capability of the system is very sensitive to electroconductive materials above the resonator pair or directly between the resonator pair and the CPOD passenger seat. Possible problems can be avoided by replacing these materials by non-electroconductive materials, as shown in Figure 8.

7.2.2 Closed electroconductive loops as indicated by Figure 7 might have an influence on the resonator detection in the CRS. Therefore, the distance between closed electroconductive loops and the resonators in the CRS should be maximized during the design of the CRS.

Closed electroconductive loops, which surround the volume above or below the resonator pair, should be avoided. This can be achieved by cutting closed loops using non-electroconductive materials, as shown in Figure 8.

7.2.3 The distance between the bottom of the resonators inside the CRS and the surface of the CRS compatibility test bench should not exceed 30 mm when the CRS is placed correctly on the CTB in accordance with Annex D (see Figure 9). In addition, in that position, the bottom of the resonator should

© ISO 2018 – All rights reserved
Documents
Document Sharing Hub
Full document details: PD ISO/TS 22239-1:2018

be parallel with the corresponding seat surface below it. An inclination of ±3° should not be exceeded (see Figure 9).

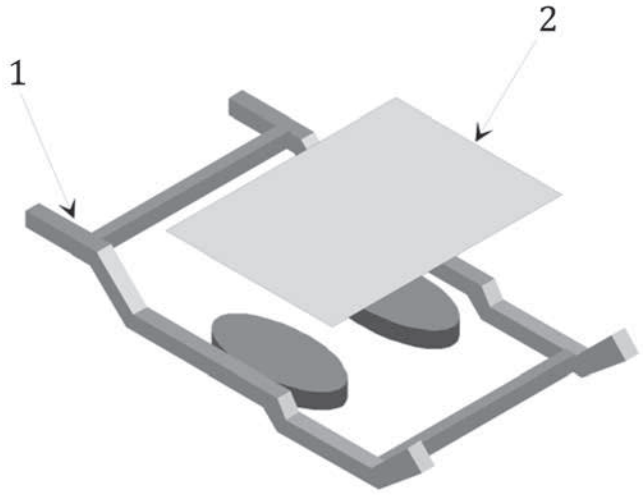

Key

1 electro-conductive loop

2 electro-conductive surface

Figure 7 — Closed electro-conductive loop or surface close to the resonators

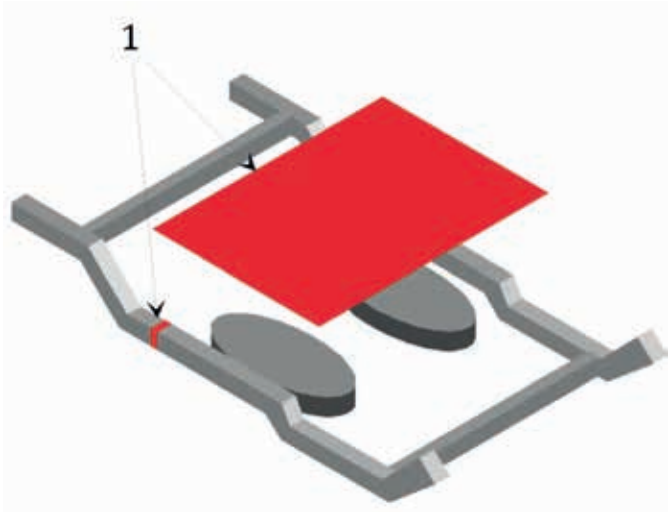

Key

1 non-electro-conductive

Figure 8 — Closed conducting loop opened using a non-electro-conductive connection

© ISO 2018 – All rights reserved

Documents
Document Sharing Hub
Full document details: PD ISO/TS 22239-1:2018

Dimensions in millimetres

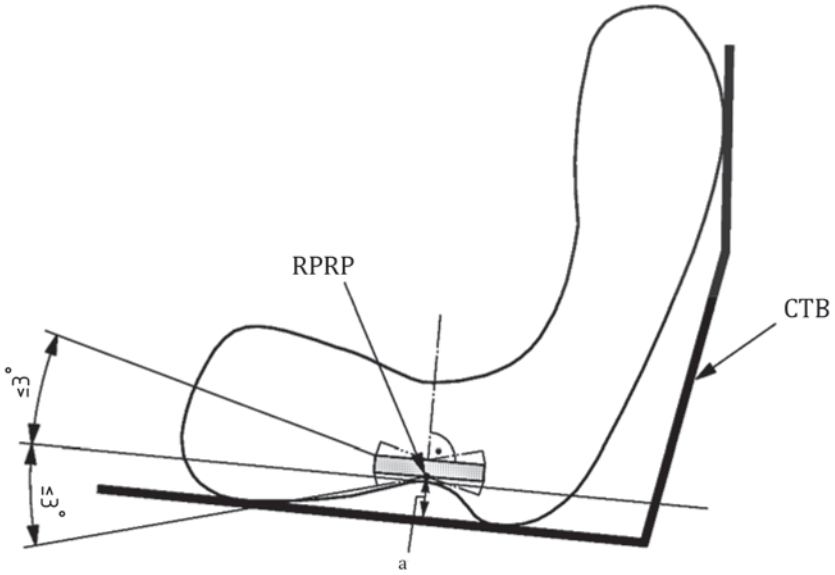

a *d*, 10 mm < *d* < 30 mm.

Figure 9 — Distance between the resonator reference point and CTB surface

7.2.4 The distance between the CRC and RPRP (see Figure 10) should be chosen in such a way that the resonator pair reference point remains within the CRS detection area when varying the CRS compatibility test bench adjustments in accordance with 9.4.2 and 9.4.3. A value as close as possible to 200 mm is recommended for this distance.

© ISO 2018 – All rights reserved
Documents
Document Sharing Hub
Full document details: PD ISO/TS 22239-1:2018

Dimensions in millimetres

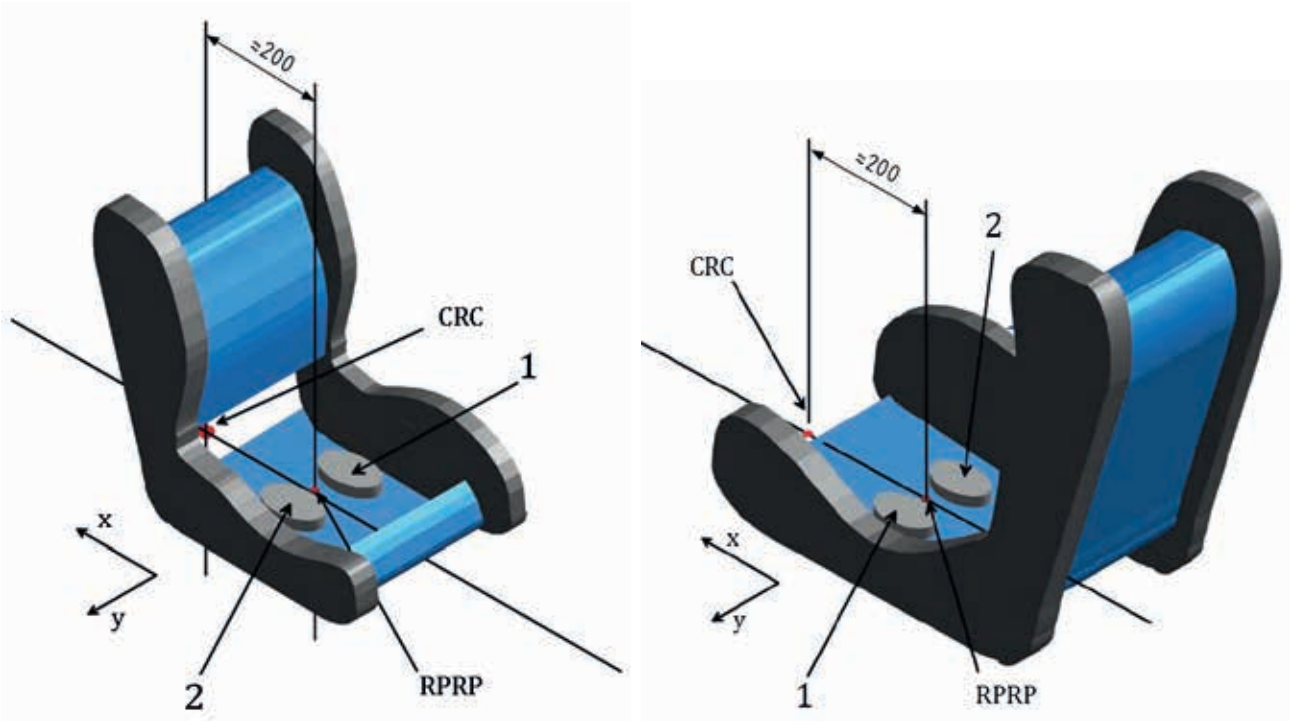

a) Forward facing CRS **b) Rearward facing CRS**

Key

1 left resonator

2 right resonator

Figure 10 — Assembly of resonators in a CRS

7.3 Installation of CPOD sensors into passenger seats

With respect to the installation of CPOD sensors into passenger seats:

— it is recommended to position the CPOD sensors directly under the seat cover instead of foaming them;

— the maximum distance between the CPOD sensor and surface of the seat cover should not exceed 20 mm;

— the seat area should be designed to be as flat as possible (see A.2, Note);

— for non-adjustable seat cushions, the distance between the CPOD sensor and the passenger's seat metal shell should be maximized;

— the distance between the seat's CRP and the centre of the CPOD sensor should be as close as possible to 200 mm, as indicated by Figure 11;

— during CPOD sensor design, account should be taken of any possible seat adjustment and/or feature that could affect the performance of the system; in order to improve the detection performance of a CRS, the two receiving antennas should overlap (see Figure 11).

© ISO 2018 – All rights reserved

Documents
Document Sharing Hub
Full document details: PD ISO/TS 22239-1:2018

Dimensions in millimetres

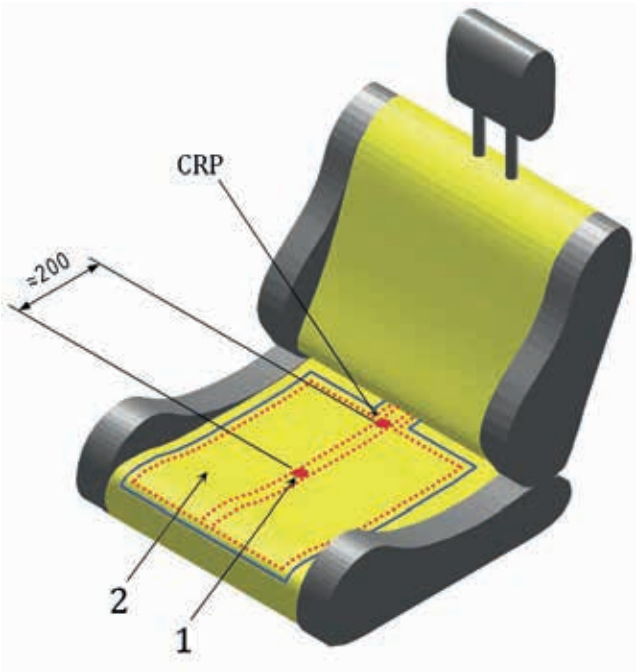

Key

1 centre of CPOD sensor

2 CPOD sensor consisting of:

— one transmitting antenna

••••••••• two receiving antennas

Figure 11 — Assembly of CPOD antennas into a passenger seat

8 Design requirements

8.1 Requirements for CPOD child seats

8.1.1 Only resonators that are CPOD-compatible in accordance with ISO/TS 22239-2:2018 shall be used.

8.1.2 The CRS shall be equipped with two CPOD resonators.

8.1.3 Easy removal of the resonators without special tools shall be avoided by the CRS design.

8.1.4 The distance between both resonator reference points shall be 140 mm ± 2 mm, as indicated in Figure B.1.

8.1.5 The resonator pair shall be positioned symmetrically in the CRS in accordance with Figure 10, such that the right resonator is assembled into the CRS right side and the left resonator in the CRS left side (CRS left and right side referenced on the child's line of sight).

— **Exception for CRS type 4** (see ISO/TS 22239-2:2018, Table 2): The resonators shall be assembled symmetrically in the CRS such that, if the CRS is mounted on the passenger seat, the left resonator is positioned above the left side and the right resonator is placed above the right side of the passenger seat (passenger seat's left and right side referenced on the driving direction).

© ISO 2018 – All rights reserved
Documents
Document Sharing Hub
Full document details: PD ISO/TS 22239-1:2018

— **For all CRS types**: The resonator pair reference point shall be part of the x-z plane of the passenger seat if the CRS is mounted correctly on the passenger seat.

8.2 Requirements for CPOD passenger seats

8.2.1 Passenger seat design

Passenger seats shall be designed to allow the installation of the fixture (Gabarit) in accordance with Annex A.

8.2.2 CPOD sensor

CPOD passenger seats shall be equipped with a CPOD sensor consisting of one transmitting and two receiving antennas. The CPOD sensor shall meet the requirements defined in Annex C. In addition, it shall meet the manufacturer's seat and electronic requirements.

It shall be assured that the CPOD sensor maintains its function during the entire life cycle, e.g. position of the antennas in the seat cushion, environmental stability, as specified by the seat/vehicle manufacturer.

8.2.3 Operating range for CPOD passenger seats

The CPOD system shall meet its functionality in accordance with Clause 6 within the limits specified in Table 1.

Table 1 — CPOD operating range

Parameter	Min.	Max.
Operating temperature T_{OP} °C	−35	85
Operating voltage (12 V power net) $V_{OP,12}$ V	10	16
Operating voltage (24 V power net) $V_{OP,24}$ V	20	32

9 Compatibility measurements

9.1 General specification

In order to ensure the performance of the CPOD system, the CRS manufacturers and the vehicle manufacturers shall perform compatibility measurements for introducing new CRS respectively new CPOD passenger seats. By means of these compatibility measurement procedures, it is ensured that all released CRS and all released CPOD passenger seats feature CPOD performance, which is characterized as described below.

a) If the CRS is placed on the passenger seat, such that the RPRP (see Annex B) remains within the detection area, the CRS is detected by the CPOD sensor in the seat:

— for vehicles where the airbag deployment is influenced by the orientation of the CRS on the seat, CPOD performance means that the presence and orientation is detected by the CPOD sensor;

— for vehicles where the airbag deployment is not influenced by the orientation of the CRS on the seat, e.g. the airbag is switched off in any case when a CRS is detected, independent of its

AVA Documents
Document Sharing Hub

© ISO 2018 – All rights reserved

Full document details: PD ISO/TS 22239-1:2018

orientation, CPOD performance means that only the presence of the CRS is detected by the CPOD system.

b) If the CRS is placed on the passenger seat, such that the RPRP in the CRS remains within the failsafe area, at least one resonator is detected by the CPOD sensor in the seat.

9.2 Compatibility test parameters range

The test temperature, T_{test}, and test voltage (vehicle), V_{test}, shall be as defined in Table 2 when performing the compatibility measurements:

Table 2 — Compatibility test parameters

Parameter	Min.	Max.
Test temperature T_{test} °C	18	28
Test voltage (vehicle) V_{test} V	nominal voltage ±2 %	

9.3 Adjustment of backrest inclination

9.3.1 Adjustment of CTB backrest angle, α

The CTB backrest angle, α, is defined as the angle between the seat plane of the CTB and the lower part of the CTB backrest, as indicated in Figure 12.

© ISO 2018 – All rights reserved
Documents
Document Sharing Hub
Full document details: PD ISO/TS 22239-1:2018

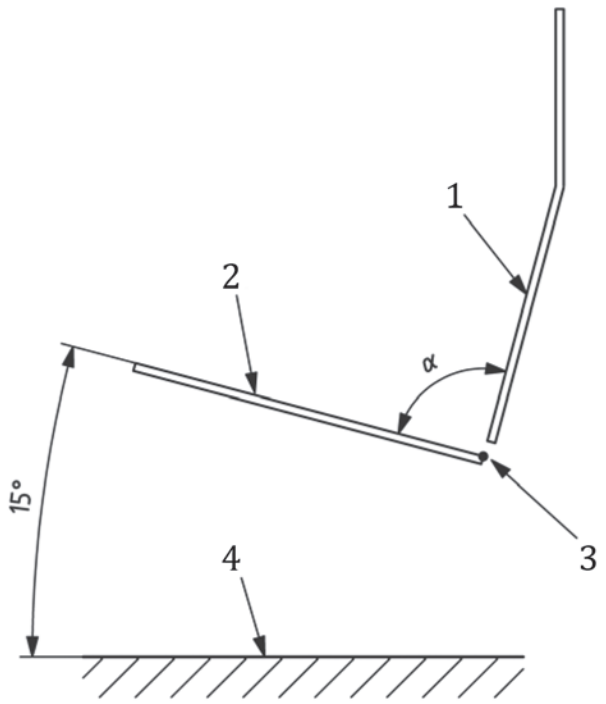

Key

1 backrest (lower part)
2 seat plane
3 rotation centre
4 bottom

Figure 12 — Definition of the CTB backrest angle, α

9.3.2 Adjustment of passenger seat backrest angle, φ

9.3.2.1 General

The passenger seat backrest angle, φ, is defined as the angle between the passenger seat surface and the backrest of the seat. To determine the target backrest angle, φ, the H-point machine as specified in ISO 6549 shall be used. However, the use of the lower leg segments of the H-point machine is optional.

9.3.2.2 Installation procedure for the three-dimensional H-point machine

The installation procedure for the three-dimensional H-point machine is as follows.

— Place muslin cotton tightly over the seat area to be checked.

— Place the seat and torso assembly of the three-dimensional H-point machine (see ISO 6549), such that the centre plane of the occupant coincides with the centre plane of the H-point machine.

NOTE In vehicles with individual seats, the centre plane of the seat represents the centre plane of the occupant. On bench seats, the centre plane of the occupant is specified by the manufacturer.

— Position the H-point machine on the seat as specified in ISO 6549:1999, 5.9 to 5.13.2.

— After the H-point machine is correctly positioned, rotate the headroom probe to its fully rearward position. The actual backrest angle, φ, can be read from the hip angle quadrant of the H-point machine (see Figure 13).

© ISO 2018 – All rights reserved

Documents
Document Sharing Hub
Full document details: PD ISO/TS 22239-1:2018

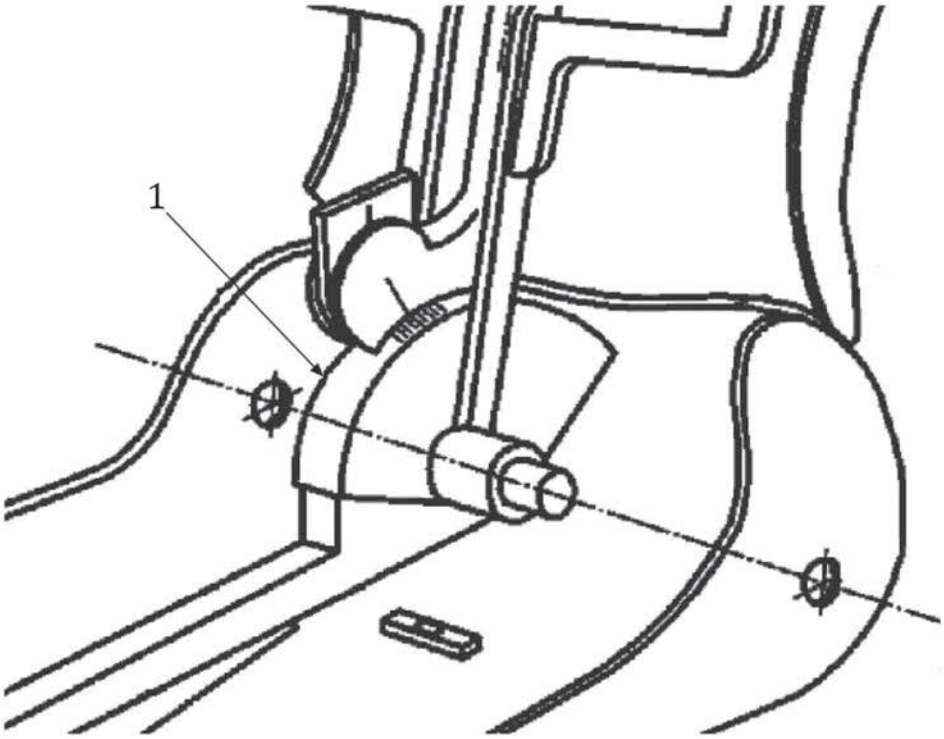

Key

1 hip angle quadrant

Figure 13 — Backrest angle indicator on the ISO 6549 H-point machine

9.4 Compatibility measurements for the CRS

9.4.1 General compatibility test description

In order to perform a CPOD compatibility check with a CRS, the CRS compatibility test bench (see Figure 14) shall be used. The CRS compatibility test bench is specified in Annex D (with dimensions based on the UNECE Regulation No.44 test seat bench). It consists of a seat surface, an adjustable backrest including removable cheeks and an antenna structure under the seat surface used to measure the magnetic coupling between the antennas and the resonators in the CRS to be tested. Before the compatibility test can be performed, the correct functionality of the coupling factor measurement setup shall be confirmed by performing the functionality check described in G.3 with the resonator probes defined in Annex F. After the functional test, the resonators in the CRS to be tested shall be replaced by the resonator probes that were used during the functional check. Tests on the CTB shall be conducted with the CRS in specified normal conditions (intended use) only, not under misuse conditions.

The compatibility measurement is divided into two parts (see 9.4.2 and 9.4.3).

© ISO 2018 – All rights reserved
Documents
Document Sharing Hub
Full document details: PD ISO/TS 22239-1:2018

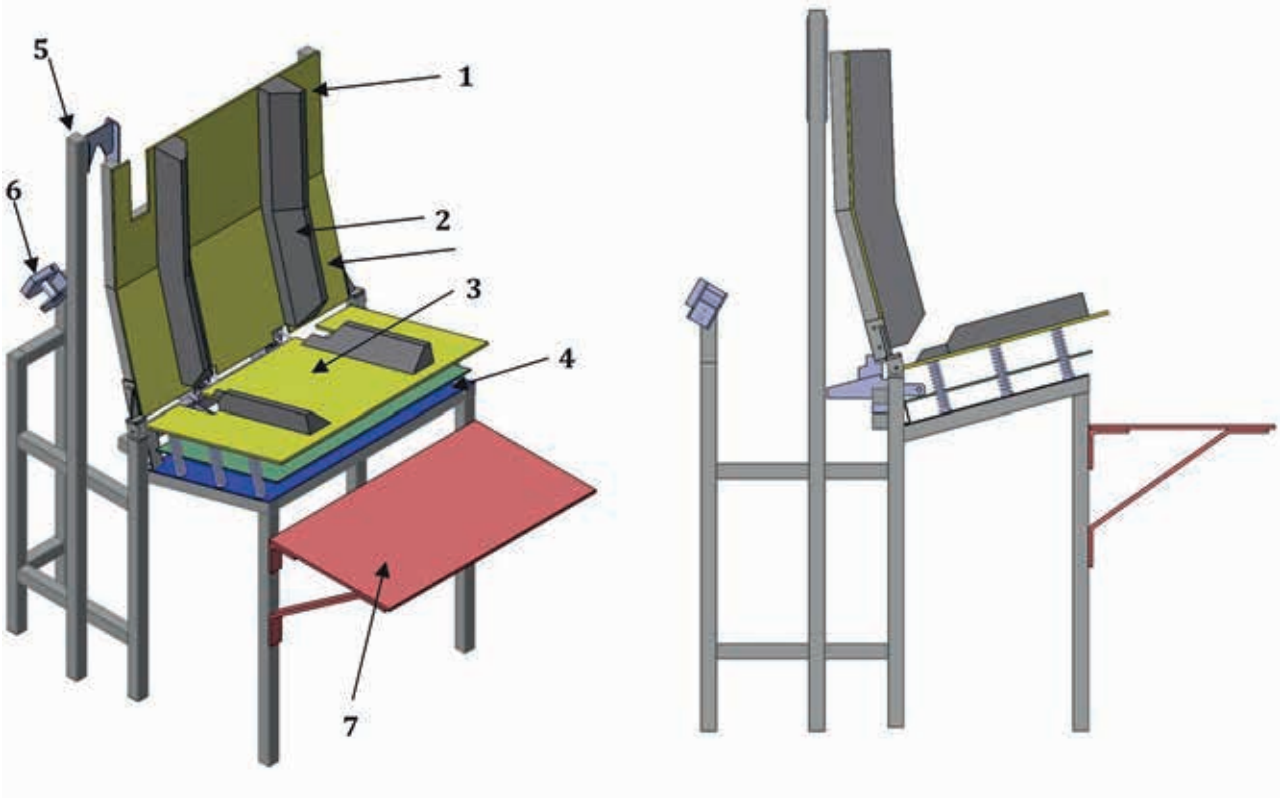

Key

1 adjustable backrest
2 removable cheeks
3 seat surface
4 carrier for antenna structure
5 pillar loop
6 belt retractor
7 footrest

Figure 14 — CPOD CRS compatibility test bench

9.4.2 Compatibility test (Part 1)

9.4.2.1 Compatibility test bench adjustment

The CTB backrest angle, α (see Figure 12) shall be adjusted to 90° in accordance with 9.3.1 in order to simulate a worst case scenario. The tests shall be conducted with the cheeks of the backrest, the cheeks on the seat surface of the test bench in order to produce a maximum displacement of the CRS in the negative x-direction and a maximum possible distance in the z-direction between the CRS and the antennas.

For the test of ISOFIX CRS, the ISOFIX anchorages of the test bench shall be adjusted in their foremost position.

9.4.2.2 Installation procedure for CRS without ISOFIX

The CRS shall be placed on the test bench in its designed orientations (forward or rearward facing) and as defined in the CRS owner's manual. If the CRS has adjustable or add-on features, e.g. footrest, adjustable backrest or angle of the cradle, these features shall be additionally tested in all possible combinations. The CRS shall be pushed against the backrest of the test bench with a force of 50 N.

© ISO 2018 – All rights reserved

AVA Documents
Document Sharing Hub
Full document details: PD ISO/TS 22239-1:2018

If adjustable devices of the CRS are changed under the force of 50 N, the CRS shall be pushed back with the maximum possible force up to 50 N that is feasible without changing the position of the adjustable devices.

Wherever this is feasible (normal conditions), the CRS shall be placed symmetrically to the test bench's centre y-plane.

The CRS shall be fastened to the test bench with the test bench restraint system, as defined in the CRS owner's manual for the installation on passenger seats. During the installation procedure, a lap belt tension and shoulder belt tension each of (50 ± 5) N shall be reached.

If the CRS is equipped with a support leg, the CRS shall be tested in the following two positions without using this feature:

a) in full contact with the seat surface of the test bench, without using the footrest;

b) with the footrest and support leg in designed configuration, as specified in the owner's manual of the CRS (for the footrest design, see Figure D.11).

9.4.2.3 Installation procedure for the CRS with ISOFIX

The CRS shall be placed on the test bench in its designed orientations (see 9.4.2.2) and as defined in the CRS owner's manual. If the CRS has adjustable or add-on features, e.g. footrest, adjustable backrest or angle of the cradle, which have an influence on the position of the CRS on the test bench (x-, z-displacement, inclination), these features shall be additionally tested in all possible combinations.

The ISOFIX connectors of the CRS shall be connected to the ISOFIX anchorages. In contrast to the definitions in its owner's manual, the connectors shall remain in their fully extended position.

In the event that an electrical connection between the CRS and the ISOFIX anchorages can be excluded over the lifetime of the CRS, the electrical connection between CRS and CTB is not requested during testing. If an electrical connection between the CRS and the ISOFIX anchorages cannot be excluded, the ISOFIX connectors of the CRS shall be electrically connected to the test bench, as shown in Figure 15.

If the CRS is equipped with a support leg, the CRS shall be tested in the following two positions:

a) in full contact with the seat surface of the test bench, without using the footrest;

b) with the footrest and support leg in designed configuration as specified in the owner's manual of the CRS (for the footrest design, see Figure D.11).

© ISO 2018 – All rights reserved
Documents
Document Sharing Hub
Full document details: PD ISO/TS 22239-1:2018