PD ISO/TS 5660-4:2016

BSI Standards Publication

Reaction-to-fire tests — Heat release, smoke production and mass loss rate

Part 4: Measurement of low levels of heat release

Documents
Document Sharing Hub

Full document details: PD ISO/TS 5660-4:2016

National foreword

This Published Document is the UK implementation of ISO/TS 5660-4:2016.

The UK participation in its preparation was entrusted by Technical Committee FSH/21, Reaction to fire tests, to Panel FSH/21/-/5, Reaction to fire tests - Heat release and smoke measurement.

A list of organizations represented on this committee can be obtained on request to its secretary.

This publication does not purport to include all the necessary provisions of a contract. Users are responsible for its correct application.

© The British Standards Institution 2017.
Published by BSI Standards Limited 2017

ISBN 978 0 580 96960 7
ICS 13.220.50

Compliance with a British Standard cannot confer immunity from legal obligations.

This Published Document was published under the authority of the Standards Policy and Strategy Committee on 31 January 2017.

Amendments/corrigenda issued since publication

Date	Text affected

Documents
Document Sharing Hub

Full document details: PD ISO/TS 5660-4:2016

TECHNICAL SPECIFICATION

ISO/TS 5660-4

First edition
2016-12-15

Reaction-to-fire tests — Heat release, smoke production and mass loss rate —

Part 4: Measurement of low levels of heat release

Essais de réaction au feu — Débit calorifique, taux de dégagement de fumée et taux de perte de masse —

Partie 4: Mesurage du débit calorifique pour la détermination des bas niveaux de combustibilité

Reference number
ISO/TS 5660-4:2016(E)

Documents
Document Sharing Hub
© ISO 2016

COPYRIGHT PROTECTED DOCUMENT

© ISO 2016, Published in Switzerland

All rights reserved. Unless otherwise specified, no part of this publication may be reproduced or utilized otherwise in any form or by any means, electronic or mechanical, including photocopying, or posting on the internet or an intranet, without prior written permission. Permission can be requested from either ISO at the address below or ISO's member body in the country of the requester.

ISO copyright office
Ch. de Blandonnet 8 • CP 401
CH-1214 Vernier, Geneva, Switzerland
Tel. +41 22 749 01 11
Fax +41 22 749 09 47
copyright@iso.org
www.iso.org

© ISO 2016 – All rights reserved

Documents
Document Sharing Hub

Full document details: PD ISO/TS 5660-4:2016

Contents

Page

Foreword ..... **v**

1 Scope **1**

2 Normative references **1**

3 Terms and definitions **2**

4 Symbols and units **3**

5 Principle **4**

6 Apparatus **4**
6.1 General 4
6.2 Cone-shaped radiant electrical heater 6
6.3 Radiation shield 6
6.4 Irradiance control 6
6.5 Weighing device 6
6.6 Specimen holder 6
6.7 Retainer frame 7
6.8 Exhaust gas system with flow measuring instrumentation 8
6.9 Gas sampling apparatus 10
6.10 Ignition circuit 10
6.11 Ignition timer 10
6.12 Oxygen analyser 11
6.13 Heat flux meters 11
6.14 Calibration burner 11
6.15 Data collection and analysis system 11
6.16 Optional side screens 11

7 Suitability of a product for testing **12**
7.1 Surface characteristics 12
7.2 Asymmetrical products 12
7.3 Materials of short burning time 12
7.4 Composite specimens 12
7.5 Products with unknown burning behaviour 12

8 Specimen construction and preparation **13**
8.1 Specimens 13
8.2 Conditioning of specimens 13
8.3 Preparation 13
8.3.1 Specimen wrapping 13
8.3.2 Specimen preparation 14

9 Test environment **14**

10 Calibration **14**
10.1 Initial calibrations 14
10.1.1 General 14
10.1.2 Weighing device response time 15
10.1.3 Weighing device output drift 15
10.1.4 Oxygen analyser delay and response times 15
10.1.5 Oxygen analyser output noise and drift 15
10.2 Operating calibrations 16
10.2.1 General 16
10.2.2 Weighing device accuracy 16
10.2.3 Oxygen analyser 16
10.2.4 Heat release rate calibration 16
10.2.5 Heater calibration 17
10.3 Less frequent calibrations 17
10.3.1 Working-standard heat flux meter calibration 17

AVA Documents
Document Sharing Hub

© ISO 2016 – All rights reserved

Full document details: PD ISO/TS 5660-4:2016

10.3.2 Linearity of heat release rate measurements ... 17
10.3.3 Accuracy of calibration burner flow meter ... 17

11 Test procedure ... 17
11.1 General precautions ... 17
11.2 Initial preparation ... 18
11.3 Test procedure ... 18

12 Test data limitations ... 19

13 Calculations ... 19
13.1 General ... 19
13.2 Calibration constant for oxygen consumption analysis ... 19
13.3 Heat release rate ... 20
13.4 Exhaust duct mass flow rate ... 20
13.5 Mass loss rate ... 21

14 Test report ... 21

Annex A (informative) **Overview ... 23**

Annex B (informative) **Calibration of the working heat flux meter ... 26**

Annex C (informative) **Calculation of heat release with additional gas analysis ... 27**

Annex D (informative) **Data obtained in initial round robin ... 31**

Bibliography ... 34

© ISO 2016 – All rights reserved
Documents
Document Sharing Hub
Full document details: PD ISO/TS 5660-4:2016

Foreword

ISO (the International Organization for Standardization) is a worldwide federation of national standards bodies (ISO member bodies). The work of preparing International Standards is normally carried out through ISO technical committees. Each member body interested in a subject for which a technical committee has been established has the right to be represented on that committee. International organizations, governmental and non-governmental, in liaison with ISO, also take part in the work. ISO collaborates closely with the International Electrotechnical Commission (IEC) on all matters of electrotechnical standardization.

The procedures used to develop this document and those intended for its further maintenance are described in the ISO/IEC Directives, Part 1. In particular the different approval criteria needed for the different types of ISO documents should be noted. This document was drafted in accordance with the editorial rules of the ISO/IEC Directives, Part 2 (see www.iso.org/directives).

Attention is drawn to the possibility that some of the elements of this document may be the subject of patent rights. ISO shall not be held responsible for identifying any or all such patent rights. Details of any patent rights identified during the development of the document will be in the Introduction and/or on the ISO list of patent declarations received (see www.iso.org/patents).

Any trade name used in this document is information given for the convenience of users and does not constitute an endorsement.

For an explanation on the meaning of ISO specific terms and expressions related to conformity assessment, as well as information about ISO's adherence to the World Trade Organization (WTO) principles in the Technical Barriers to Trade (TBT) see the following URL: www.iso.org/iso/foreword.html.

The committee responsible for this document is ISO/TC 92, *Fire safety*, Subcommittee SC 1, *Fire initiation and growth*.

A list of all parts in the ISO 5660 series can be found on the ISO website.

© ISO 2016 – All rights reserved

Documents
Document Sharing Hub
Full document details: PD ISO/TS 5660-4:2016

Documents
Document Sharing Hub

Full document details: PD ISO/TS 5660-4:2016

Reaction-to-fire tests — Heat release, smoke production and mass loss rate —

Part 4: Measurement of low levels of heat release

WARNING — The test procedures involve high temperatures and combustion processes. Therefore, hazards can exist for burns, ignition of extraneous objects or clothing, and for inhalation of combustion products. The operator should use protective gloves for insertion and removal of test specimens. Neither the cone heater nor the associated fixtures should be touched while hot except with the use of protective gloves.

Materials containing volatile organic substances or decomposition products, or large amounts of moisture may produce violent releases of combustible gases or water vapour during testing.

Materials with high release rates normally tested in ISO 5660-1 **would give dangerous conditions if tested in this apparatus. To ensure this does not happen, specimens shall first be tested at the smaller 100 × 100 mm** ISO 5660-1 **specimen size to check approximate heat release rates before proceeding.**

1 Scope

This document specifies a method for evaluating materials and products that produce low levels of heat release when exposed to high irradiance levels typical of fully developed fires. It differs from ISO 5660-1 by prescribing items such as specific specimen size, specimen holder, specimen orientation, volumetric flow rate for O_2 analyses and irradiance levels at which testing is conducted.

The test method described in this document is intended for use on products and materials that contain only small amounts of combustible elements, e.g. test specimens that yield a total heat release of 0,75 MJ/m^2 to 15 MJ/m^2.

NOTE 1 The test method for specimens that yield moderate to high total heat release is described in ISO 5660-1. The information obtained from this test method in this document can also be used for fire safety engineering purposes.

NOTE 2 As in ISO 5660-1, the heat release rates are not measured directly and absolute but are theoretically calculated using the empirically derived constant of proportionality that links heat released and measured oxygen consumed.

2 Normative references

The following documents are referred to in text in such a way that some or all of their content constitutes requirements of this document. For dated references, only the edition cited applies. For undated references, the latest edition of the referenced document (including any amendments) applies.

ISO 291, *Plastics — Standard atmospheres for conditioning and testing*

ISO 554, *Standard atmospheres for conditioning and/or testing — Specifications*

ISO 5660-1:2015, *Reaction-to-fire tests — Heat release, smoke production and mass loss rate — Part 1: Heat release rate (cone calorimeter method)*

ISO 5660-3, *Reaction-to-fire tests — Heat release, smoke production and mass loss rate — Part 3: Guidance on measurement*

© ISO 2016 – All rights reserved

Documents
Document Sharing Hub

Full document details: PD ISO/TS 5660-4:2016

ISO/TR 14697, *Reaction-to-fire tests — Guidance on the choice of substrates for building and transport products*

ISO 14934-2, *Fire tests — Calibration and use of heat flux meters — Part 2: Primary calibration methods*

ISO 14934-3:2012, *Fire tests — Calibration and use of heat flux meters — Part 3: Secondary calibration method*

3 Terms and definitions

For the purposes of this document, the terms and definitions given in ISO 13943, and the following apply.

ISO and IEC maintain terminological databases for use in standardization at the following addresses:

— IEC Electropedia: available at http://www.electropedia.org/

— ISO Online browsing platform: available at http://www.iso.org/obp

3.1
emissivity
ratio of the radiation emitted by a radiant source to the radiation that would be emitted by a black body radiant source at the same temperature

Note 1 to entry: Emissivity is dimensionless.

[SOURCE: ISO 13943:2008, 4.75]

3.2
flashing
existence of flame on or over the surface of the specimen for periods of less than 1 s

3.3
ignition
onset of *sustained flaming* (3.10)

3.4
irradiance
<at a point on a surface> quotient of the radiant flux incident on an infinitesimal element of surface containing the point, and the area of that element

Note 1 to entry: Convective heating is minimized in the horizontal specimen orientation. For this reason, the term “irradiance” is used instead of “heat flux” throughout this document as it best indicates the essentially radiative mode of heat transfer.

3.5
material
single substance or uniformly dispersed mixture

EXAMPLE Metal, stone, timber, concrete, mineral fibre and polymers.

3.6
orientation
plane in which the exposed face of the specimen is located during testing

3.7
oxygen consumption principle
proportional relationship between the mass of oxygen consumed during combustion and the heat released

3.8
product
material, composite or assembly about which information is required

© ISO 2016 – All rights reserved
Documents
Document Sharing Hub
Full document details: PD ISO/TS 5660-4:2016

3.9
specimen
representative piece of the product that is tested together with any substrate or treatment

Note 1 to entry: For certain types of product, for example products that contain an air gap or joints, it might not be possible to prepare a specimen that is representative of the end-use conditions; see Clause 7.

3.10
sustained flaming
existence of flame on or over the surface of the specimen for periods of over 10 s

3.11
transitory flaming
existence of flame on or over the surface of the specimen for periods of between 1 and 10 s

4 Symbols and units

For the purposes of this document, the following symbols apply.

Symbol	Designations	Unit
A_s	initially exposed surface area of the specimen, 0,020 7 m^2	m^2
C	orifice flow meter calibration constant	$m^{1/2}\ g^{1/2}\ K^{1/2}$
Δh_c	net heat of combustion	$kJ\ g^{-1}$
$\Delta h_{c,eff}$	effective net heat of combustion	$MJ{\cdot}kg^{-1}$
m	mass of the specimen	g
Δm	total mass loss	g
m_f	mass of the specimen at the end of the test	g
m_s	mass of the specimen at sustained flaming	g
$\dot{m}_{A,10-90}$	average mass loss rate per unit area between 10 % and 90 % of mass loss	$g{\cdot}m^{-2}{\cdot}s^{-1}$
m_{10}	mass of the specimen at 10 % of total mass loss	G
m_{90}	mass of the specimen at 90 % of total mass loss	G
$\dot{m}$	mass change rate of the specimen	$g{\cdot}s^{-1}$
$\dot{m}_e$	mass flow rate in exhaust duct	$kg\ s^{-1}$
Δp	orifice meter pressure differential	Pa
$\dot{q}$	heat release rate	kW
$\dot{q}_A$	heat release rate per unit area	$kW\ m^{-2}$
$\dot{q}_{A,max}$	maximum value of the heat release rate per unit area	$kW\ m^{-2}$
$\dot{q}_{A,180}$	average heat release rate per unit area over the period starting at t_{ig} and ending 180 s later	$kW\ m^{-2}$
$\dot{q}_{A,300}$	average heat release rate per unit area over the period starting at t_{ig} and ending 300 s later	$kW\ m^{-2}$
$Q_{A,tot}$	total heat released per unit area during the entire test	$MJ\ m^{-2}$
r_o	stoichiometric oxygen/fuel mass ratio	1
t	time	s
t_d	delay time of the oxygen analyser	s
t_{ig}	time to ignition (onset of sustained flaming)	s
Δt	sampling time interval	s

© ISO 2016 – All rights reserved

Documents
Document Sharing Hub
Full document details: PD ISO/TS 5660-4:2016

Symbol	Designations	Unit
t_{10}	time at 10 % of total mass loss	s
t_{90}	time at 90 % of total mass loss	s
T_e	absolute temperature of gas at the orifice meter	K
X_{O_2}	oxygen analyser reading, mole fraction of oxygen	1
$X^0_{O_2}$	initial value of oxygen analyser reading	1
$X^{-1}_{O_2}$	oxygen analyser reading, before delay time correction	1
ε	emissivity	

5 Principle

The measurement of the heat release rate and total heat release is used to quantify the test specimen's ability to ignite and contribute heat to the fire. It is based on the observation that, generally, the net heat of combustion of a material is directly related to the quantity of oxygen required for its combustion. This relationship is such that approximately 13,1 × 10^3 kJ of heat are released per 1,0 kg of oxygen consumed. Optionally, additional measurements of carbon dioxide and carbon monoxide can be made and used in calculation of heat release. The apparatus procedures and calculation methods described in Annex C are then applicable.

Specimens are exposed in ambient air conditions, while being subjected to an irradiance of 50 kW·m^{-2} in the presence of a spark ignition source. Alternatively, testing may be conducted at an exposure of 75 kW·m^{-2}. The changes in oxygen, O_2, concentration of gases and exhaust gas mass flow rate are monitored and, from these data, the heat release is calculated. Additionally, the time to sustained flaming is observed and mass-loss rate is measured.

In this document, the heat release is measured from the moment the specimen is subjected to the radiant thermal exposure of a conical heater and is continued for 20 min. The primary measurements are oxygen concentration and exhaust-gas mass flow rate. Provision is also made for the time to sustained flaming. This test method is used to evaluate specimens in a horizontal orientation under an external irradiance.

In order to measure heat release of materials or products that produce low levels of heat release when exposed to high irradiances typical of fully developed fires, this part differs from ISO 5660-1 by prescribing a larger specimen size (150 mm × 150 mm), a 50 % lower exhaust gas volumetric flow rate, direct connection between the plenum and heater to ensure collection of all the combustion gases, more stringent specifications for the oxygen analyser to improve accuracy, and a specified irradiance level at which to conduct testing. This document is designed to test samples with peak heat release of <200 kW/m^2 and total heat release of 0,75 MJ/m^2 to 15 MJ/m^2.

PMMA is typically used to check the general operation of a cone calorimeter in ISO 5660-1. PMMA shall not be used with this test method as the heat release rate is too high.

6 Apparatus

6.1 General

The apparatus shall be set up as shown in Figure 1, with the individual components as described in detail in 6.2 to 6.6.

© ISO 2016 – All rights reserved
Documents
Document Sharing Hub
Full document details: PD ISO/TS 5660-4:2016

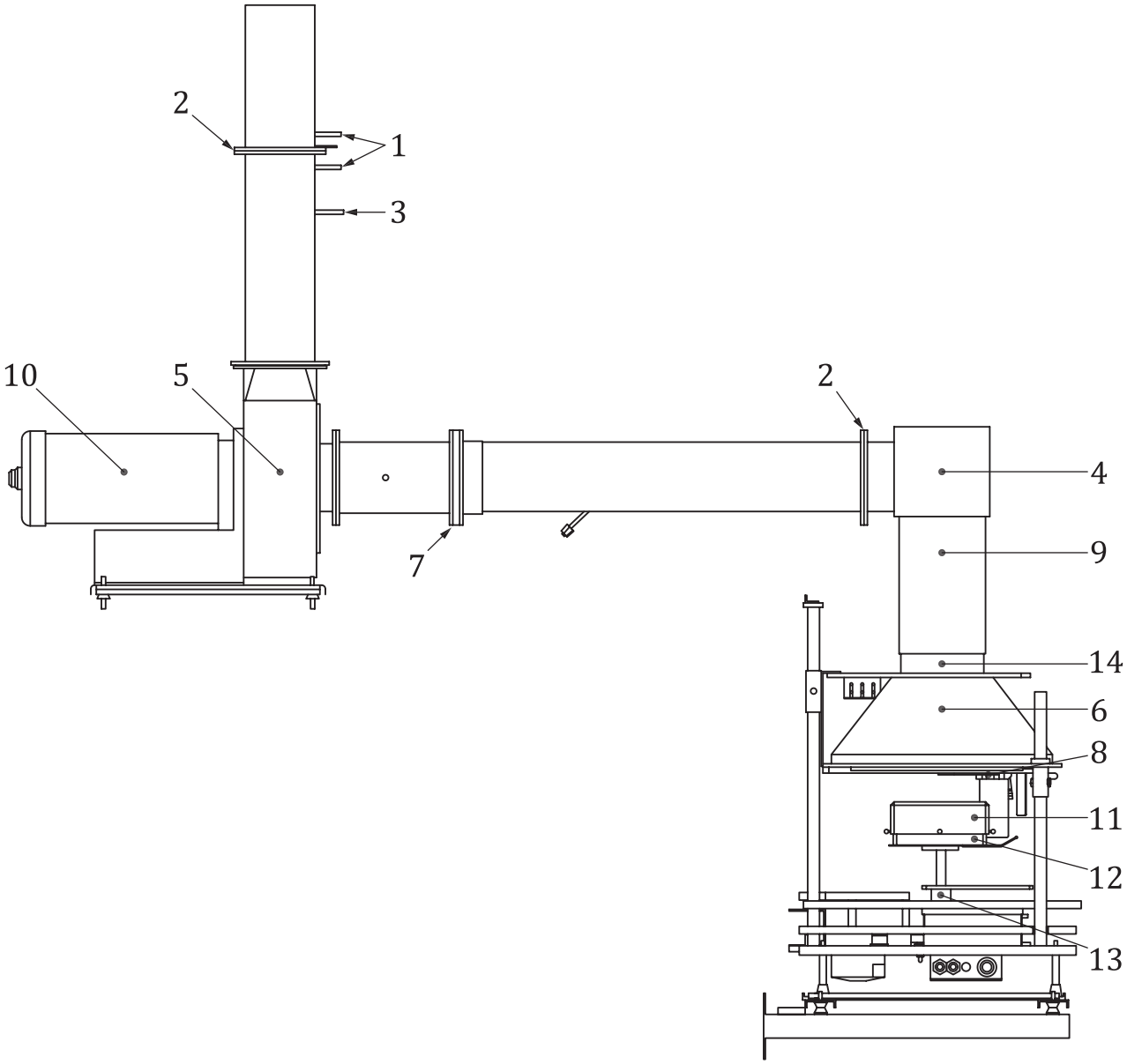

Key

1	pressure ports	8	spark plug
2	orifice plates	9	vertical connection
3	thermocouple (located on stock centreline)	10	blower motor
4	plenum with extension piece	11	retainer frame and specimen
5	blower	12	specimen holder
6	heater	13	weighing device
7	gas sampling probe	14	expansion flange

Figure 1 — Apparatus

© ISO 2016 – All rights reserved

Documents
Document Sharing Hub
Full document details: PD ISO/TS 5660-4:2016

6.2 Cone-shaped radiant electrical heater

The specimen shall be irradiated using a heater similar to that used in ISO 5660-1 but larger in dimension and constructed such that it be capable of producing irradiance on the surface of the specimen of up to 80 kW m^2. The irradiance shall be uniform within the central 100 mm × 100 mm area of the exposed specimen surface, to within ±2 %, and to ±3 % over the entire specimen surface.

The irradiance from the heater shall be maintained at a preset level by controlling the average temperature of three thermocouples (type K stainless steel-sheathed thermocouples have been proven suitable but Inconel or other high-performance materials are also acceptable), symmetrically disposed and in contact with, but not welded to, the heater element, either 3,0 mm outside diameter sheathed thermocouples with exposed hot junction or 1,0 mm to 1,6 mm outside diameter sheathed thermocouples with unexposed hot junction shall be used.

NOTE A heater having a total length of 12 m, lower outer diameter of 350 mm and top outer diameter of 150 mm with a power input of 15 kW has been found suitable.

6.3 Radiation shield

The cone heater shall be provided with a removable radiation shield to protect the specimen from the irradiance prior to the start of a test. The shield shall be made of non-combustible material, with a total thickness not exceeding 12 mm. The shield shall be one of the following, either:

a) water-cooled and coated with a durable matte black finish of surface emissivity, ε, equal to 0,95 ± 0,05;

b) not water-cooled, either metal with a reflective top surface or ceramic in order to minimize radiation transfer.

The shield shall be equipped with a handle or other suitable means for quick insertion and removal. The cone heater base plate shall be equipped with a mechanism for moving the shield into position.

6.4 Irradiance control

The irradiance control system shall be properly tuned so that it maintains the average temperature of the heater thermocouples during the calibration described in 10.2.5 at the preset level to within ±10 °C.

6.5 Weighing device

The weighing device shall have an accuracy of ±0,1 g or better, measured according to the calibration procedure described in 10.2.2. The weighing device shall be capable of measuring the mass of specimens of at least 2,0 kg. The weighing device shall have a 10 % to 90 % response time of 4 s or less, as determined according to the calibration described in 10.1.3. The output of the weighing device shall not drift by more than 1 g over a 30 min period, as determined with the calibration described in 10.1.4.

6.6 Specimen holder

The specimen holder shall be as shown in Figure 2. The specimen holder shall have the shape of a square pan with an outside dimension of (156 ± 1) mm × (156 ± 1) mm at the top, and a depth of (25 ± 1) mm. The holder shall be constructed of stainless steel with a thickness of (2,4 ± 0,15) mm. It shall include a handle to facilitate insertion and removal, and a mechanism to ensure central location of the specimen under the heater and proper alignment with the weighing device. The bottom of the holder shall be lined with a layer of low density (nominal density of 65 kg/m^3) refractory fibre blanket with a thickness of at least 13 mm. The distance between the bottom surface of the cone heater and the top of the specimen shall be adjusted to be (25 ± 1) mm.

© ISO 2016 – All rights reserved
Documents
Document Sharing Hub
Full document details: PD ISO/TS 5660-4:2016