PD ISO/TS 81346-101:2025

BSI Standards Publication

Industrial systems, installations and equipment and industrial products — Structuring principles and reference designations

Part 101: Modelling concepts, guidelines and requirements for power supply systems

Documents
Document Sharing Hub

Full document details: PD ISO/TS 81346-101:2025

National foreword

This Published Document is the UK implementation of ISO/TS 81346-101:2025.

The UK participation in its preparation was entrusted to Technical Committee TPR/1, Technical Product Realization.

A list of organizations represented on this committee can be obtained on request to its committee manager.

Contractual and legal considerations

This publication has been prepared in good faith, however no representation, warranty, assurance or undertaking (express or implied) is or will be made, and no responsibility or liability is or will be accepted by BSI in relation to the adequacy, accuracy, completeness or reasonableness of this publication. All and any such responsibility and liability is expressly disclaimed to the full extent permitted by the law.

This publication is provided as is, and is to be used at the recipient's own risk.

The recipient is advised to consider seeking professional guidance with respect to its use of this publication.

This publication is not intended to constitute a contract. Users are responsible for its correct application.

This publication is not to be regarded as a British Standard.

© The British Standards Institution 2025
Published by BSI Standards Limited 2025

ISBN 978 0 539 24434 2

ICS 01.110

Compliance with a Published Document cannot confer immunity from legal obligations.

This Published Document was published under the authority of the Standards Policy and Strategy Committee on 31 January 2025.

Amendments/corrigenda issued since publication

Date	Text affected

Documents
Document Sharing Hub

Full document details: PD ISO/TS 81346-101:2025

Technical Specification

ISO/TS 81346-101

First edition
2025-01

Industrial systems, installations and equipment and industrial products — Structuring principles and reference designations —

Part 101: Modelling concepts, guidelines and requirements for power supply systems

Systèmes industriels, installations et appareils et produits industriels — Principes de structuration et désignation de référence —

Partie 101: Concepts de modélisation, lignes directrices et exigences pour les systèmes d'alimentation électrique

Reference number
ISO/TS 81346-101:2025(en)

© ISO 2025

Documents
Document Sharing Hub

Full document details: PD ISO/TS 81346-101:2025

COPYRIGHT PROTECTED DOCUMENT

© ISO 2025

All rights reserved. Unless otherwise specified, or required in the context of its implementation, no part of this publication may be reproduced or utilized otherwise in any form or by any means, electronic or mechanical, including photocopying, or posting on the internet or an intranet, without prior written permission. Permission can be requested from either ISO at the address below or ISO's member body in the country of the requester.

ISO copyright office
CP 401 • Ch. de Blandonnet 8
CH-1214 Vernier, Geneva
Phone: +41 22 749 01 11
Email: copyright@iso.org
Website: www.iso.org

Published in Switzerland

Documents
Document Sharing Hub
Full document details: PD ISO/TS 81346-101:2025

Contents

Page

Foreword ... **v**
Introduction ... **vi**
1 Scope ... **1**
2 Normative references ... **1**
3 Terms and definitions ... **1**
4 Abbreviated terms ... **2**
5 Modelling principles ... **2**
5.1 Design for purpose ... 2
5.2 Receiver's ownership principle ... 3
5.3 Collector system principle ... 4
5.4 Classification according to inherent functionality ... 5
5.5 Immaterial instantiation ... 5
5.6 Parent system and sub-systems ... 5
5.7 Limited constituent systems ... 7
5.7.1 General ... 7
5.7.2 Lower limit ... 8
5.7.3 Upper limit ... 8
5.8 Modelling for the future ... 9
5.9 Preferred semantics ... 9
5.10 RDS implemented to multiple domains (RDS-PS and RDS-CW) ... 9
5.11 Use of the symbol "?" ... 11
5.12 Structuring guidelines ... 11
6 Top node ... **12**
6.1 General ... 12
6.2 Top nodes identifying large systems (stations, plants and factories) ... 13
6.3 Other purpose top nodes — temporary structures ... 13
6.3.1 General ... 13
6.3.2 Orders and bills of materials ... 14
6.3.3 Modular tasks and views, temporary structures ... 14
6.4 Top nodes for cataloguing purposes ... 15
6.5 Other purpose top nodes — (%) type aspects top nodes ... 16
7 Aspects ... **17**
7.1 Reference designation sets ... 17
7.1.1 General ... 17
7.1.2 Semantics ... 18
7.2 Functional aspect [=] ... 18
7.3 Type aspect [%] ... 20
7.4 Product aspect [-] ... 22
7.4.1 General ... 22
7.4.2 Assembly structure ... 22
7.4.3 Bill of material structures ... 24
7.5 Location aspect [+Host of installation] ... 25
7.6 Location aspect [++Site of installation] ... 25
7.6.1 General ... 25
7.6.2 Levels and floors ... 27
7.6.3 Syntax ... 29
7.7 Location-type aspect [%%] ... 29
8 System associations and relationship classification ... **30**
8.1 Implicit association of the hierarchical structure ... 30
8.2 RD-set ... 30
8.3 Relationship classification ... 31
8.4 Relationships between aspects ... 32

© ISO 2025 – All rights reserved

Documents
Document Sharing Hub
Full document details: PD ISO/TS 81346-101:2025

9 Classification guidelines — Power supply systems ... **33**
9.1 Prime systems (main systems) ... 33
9.1.1 General ... 33
9.1.2 Electric power transporting systems (B-systems) ... 33
9.1.3 Supporting systems (D-systems) ... 33
9.1.4 Managing systems (F-systems) ... 33
9.2 Technical systems ... 34
9.2.1 General ... 34
9.2.2 Consecutive duplicated classes ... 34
9.2.3 AA-AE Structural support classes ... 36
9.2.4 Pumping systems (KE) or Liquid matter transport systems (JB) ... 36
9.2.5 Electrical power supply (HD) or electrical energy storage system (QD) ... 36
9.2.6 Electrical energy flow control system (KL) or electrical power distribution system (JE) ... 37
9.2.7 Power system phases ... 37
9.3 Component systems ... 38
9.3.1 General ... 38
9.3.2 High voltage systems (WB?/WD?) ... 38
9.3.3 QMA/QNA/RNA Valves ... 38
9.3.4 System phases ... 38

10 Classification guideline — Construction works ... **38**
10.1 General ... 38
10.2 Structure identifier ... 38

11 Examples ... **41**
11.1 Generator Excitation System ... 41
11.2 High pressure oil supply system ... 42

12 Implementation guidelines ... **43**
12.1 A recommended aspect ... 43
12.2 Depth and structure complexity ... 44
12.3 One object performing multiple functions ... 45
12.3.1 Multiple functions and Single Source of Truth (SSOT) within one system ... 45
12.3.2 Strict singular product aspect occurrence ... 46
12.3.3 Digital Object Identifier (DOI) ... 47
12.3.4 Preferred reference designations (PRD) ... 48
12.4 Simplification/adaptation guideline ... 50
12.4.1 General ... 50
12.4.2 Function aspect for signal structuring ... 50
12.4.3 Omitting full stops "." in between RDS levels ... 50

Annex A (informative) **Example of use — The circuit breaker** ... **51**

Annex B (informative) **Example of use — Creation and evolution of an RD-set** ... **53**

Annex C (informative) **Example of a class conversion table** ... **59**

Bibliography ... **137**

© ISO 2025 – All rights reserved

Documents
Document Sharing Hub
Full document details: PD ISO/TS 81346-101:2025

Foreword

ISO (the International Organization for Standardization) and IEC (the International Electrotechnical Commission) form the specialized system for worldwide standardization. National bodies that are members of ISO or IEC participate in the development of International Standards through technical committees established by the respective organization to deal with particular fields of technical activity. ISO and IEC technical committees collaborate in fields of mutual interest. Other international organizations, governmental and non-governmental, in liaison with ISO and IEC, also take part in the work.

The procedures used to develop this document and those intended for its further maintenance are described in the ISO/IEC Directives, Part 1. In particular, the different approval criteria needed for the different types of document should be noted. This document was drafted in accordance with the editorial rules of the ISO/IEC Directives, Part 2 (see www.iso.org/directives or www.iec.ch/members_experts/refdocs).

ISO and IEC draw attention to the possibility that the implementation of this document may involve the use of (a) patent(s). ISO and IEC take no position concerning the evidence, validity or applicability of any claimed patent rights in respect thereof. As of the date of publication of this document, ISO and IEC had not received notice of (a) patent(s) which may be required to implement this document. However, implementers are cautioned that this may not represent the latest information, which may be obtained from the patent database available at www.iso.org/patents and https://patents.iec.ch. ISO and IEC shall not be held responsible for identifying any or all such patent rights.

Any trade name used in this document is information given for the convenience of users and does not constitute an endorsement.

For an explanation of the voluntary nature of standards, the meaning of ISO specific terms and expressions related to conformity assessment, as well as information about ISO's adherence to the World Trade Organization (WTO) principles in the Technical Barriers to Trade (TBT) see www.iso.org/iso/foreword.html. In the IEC, see www.iec.ch/understanding-standards.

This document was prepared jointly by Technical Committee ISO/TC 10, *Technical product documentation*, Subcommittee SC 10, *Process plant documentation*, and Technical Committee IEC/TC 3, *Documentation, graphical symbols and representations of technical information*.

A list of all parts in the ISO/IEC 81346 series can be found on the ISO and IEC websites.

Any feedback or questions on this document should be directed to the user's national standards body. A complete listing of these bodies can be found at www.iso.org/members.html and www.iec.ch/national-committees.

© ISO 2025 – All rights reserved

Documents
Document Sharing Hub
Full document details: PD ISO/TS 81346-101:2025

Introduction

This document provides guidelines for the understanding and application of the ISO 81346 and IEC 81346 reference designation system (RDS) for power supply systems (PS). It was developed in response to demands by the power supply sector for guidelines to the application of the ISO 81346 and IEC 81346 series, in particular ISO 81346-10.

PS, and the target industries of this document, include but are not limited to: wind, photovoltaic, thermal, nuclear and hydropower production.

The very basics of the RDS are not explained in this document. It is assumed that the user of this document already is familiar with the major concepts detailed in IEC 81346-1 and IEC 81346-2. These concepts include the four RDS aspects, the basic RDS semantics and basic RDS classification rules.

© ISO 2025 – All rights reserved

Documents
Document Sharing Hub
Full document details: PD ISO/TS 81346-101:2025

Industrial systems, installations and equipment and industrial products — Structuring principles and reference designations —

Part 101: Modelling concepts, guidelines and requirements for power supply systems

1 Scope

This document gives guidelines to support the application of the ISO 81346 and IEC 81346 series to power supply systems. It also specifies best practice for its use and implementation depending on the user and situation. The application of this document supports harmonization within and between the power supply technical domains and industries.

Introductory examples of the use of reference designation systems (RDS) can be found in Annex A and Annex B. Annex C provides an example of a conversion table between an example structuring system and the classes specified in this document and other parts of the ISO 81346 and IEC 81346 series.

2 Normative references

The following documents are referred to in the text in such a way that some or all of their content constitutes requirements of this document. For dated references, only the edition cited applies. For undated references, the latest edition of the referenced document (including any amendments) applies.

IEC 81346-1:2022, *Industrial systems, installations and equipment and industrial products — Structuring principles and reference designations — Part 1: Basic rules*

IEC 81346-2:2019, *Industrial systems, installations and equipment and industrial products — Structuring principles and reference designations — Part 2: Classification of objects and codes for classes*

3 Terms and definitions

For the purposes of this document, the terms and definitions given in IEC 81346-1:2022, IEC 81346-2:2019 and the following apply.

ISO and IEC maintain terminology databases for use in standardization at the following addresses:

— ISO Online browsing platform: available at https://www.iso.org/obp

— IEC Electropedia: available at https://www.electropedia.org/

3.1
horizontal system
system which has an impact or supports one or more *vertical systems* (3.3) without being one

EXAMPLE Managing systems (e.g. =F1) or supporting systems (e.g. =D1)

Note 1 to entry: There can be supporting systems within core process (vertical) systems (e.g. the monitoring system of the generator =A1.RA1.LE1).

© ISO 2025 – All rights reserved

Documents Document Sharing Hub
Full document details: PD ISO/TS 81346-101:2025

3.2
preferred reference designation
PRD
reference designation (RD) used as the main key to identify an object within a database

3.3
vertical system
system that is a part of the core process of the power production, distribution or transmission for power supply systems

EXAMPLE Production unit systems (e.g. =A1) or energy transport systems (e.g. =C1).

4 Abbreviated terms

For the purposes of this document, the abbreviated terms listed in Table 1 apply.

Table 1 — List of abbreviations

Abbreviation	Meaning
BIM	building information modelling
CB	circuit breaker
CDD	IEC common data dictionary
CID	construction identifier
CW	construction works
DOI	digital object identifier
GIS	geographic information system
HSE	health security and environment
IOD	individual object database
P&ID	piping and instrumentation diagram
PRD	preferred reference designation
PS	power supply systems
RD	reference designation
RDS	reference designation system
SCADA	supervisory control and data acquisition
SSOT	single source of truth

5 Modelling principles

5.1 Design for purpose

A system can be a constituent of a large and complex system. If so, it will often have a multi-levelled reference designation (RD). Or it can be such a simple overall system, and the constituents will be represented by a single level RD. It is the designer's responsibility to select the appropriate structure to reflect the complexity of the system in question.

The depth and complexity of a structured representation will be influenced by the innate complexity of the overall system in question. A nuclear power plant needs many levels to correctly represent and model all the functionality within it. Not all systems need that level of detail. The representation of highly complex systems can often benefit from simplifications. It would likely not make sense to include every single system down to individual bolts and screws when modelling a complete nuclear power plant.

The purpose of creation of the structure (also called model in this document) should also influence the complexity and granulation of the representation of the system. A model designed to provide an overview

© ISO 2025 – All rights reserved

Documents
Document Sharing Hub
Full document details: PD ISO/TS 81346-101:2025

of a chemical park main processes, for example, does not need to include a detailed overview of the layers in the roof construction of the gardening equipment shed.

The framework set by the selection of aspect should be considered when designing a structure. When structuring a system based on the functional aspect, the system functional complexity and process criticality should be looked at, not physical size or cost. Large or costly objects, or both, are not always complex from a functional point of view. A transformer can be considered quite simple in the functional aspect, no matter what physical size, complexity of construction or costs it has. It usually has few functional sub-systems, and a simple functionality. With an RD-based model, depth and level of details should be influenced by its intended use. The structure should be a tool to benefit the user, not an absolute mirror of reality and all its details.

EXAMPLE 1 A component in the lower levels of a complex structure (e.g. a motor within a critical sub-system for the process, =A1.KA1.KK1.MAA1) can be of such importance to the process that a data collecting system can be required and of interest to the operating party (e.g. =A1.KA1.KK1.MAA1.KED1). Even the sensors connected can be of interest and can be represented (e.g. =A1.KA1.KK1.MAA1.KED1.BTA1) if useful.

EXAMPLE 2 A simple gate can be represented by a simple structure e.g. only two levels, all within the component system:

=C1.QQF1 – Gate system

=C1.QQF1.MAA1 – Gate motor

or it can be a complex system with heating system, auxiliary power supply, monitoring systems and so on:

=C1.KA1 – Gate system

=C1.KA1.LE1 – Gate system monitoring system

=C1.KA1.LE1.BPA1 – Upstream pressure monitoring system

=C1.KA1.LE1.BPA1.BPA1 – Upstream pressure monitoring 1

= C1.KA1.LE1.BPA1.BPA2 – Upstream pressure monitoring 2

= C1.KA1.LE1.BPA1.BPA3 – Upstream pressure monitoring 3

=C1.KA1.HE1 – Gate heating system

…

The structure gives the proper representation of the system and lets the user of this document understand the system complexity through the model complexity.

Throughout this document, the basic semantics and classification rules for reference designation systems in accordance with IEC 81346-1 and IEC 81346-2 are used.

5.2 Receiver's ownership principle

According to the receiver's ownership principle shown in Figure 1 and the example in Figure 2, when a system is intended to link two other systems on the same hierarchical level, and when it is unclear to which system it belongs, the linking system should be part of the receiving system (in terms of information, matter or energy of any kind).

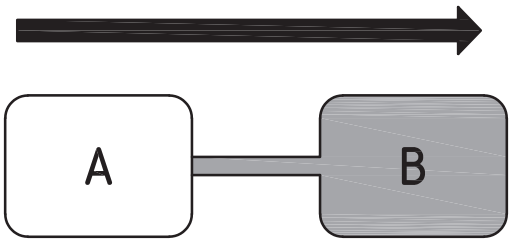

Figure 1 — Receiver's ownership principle

© ISO 2025 – All rights reserved

Documents
Document Sharing Hub
Full document details: PD ISO/TS 81346-101:2025

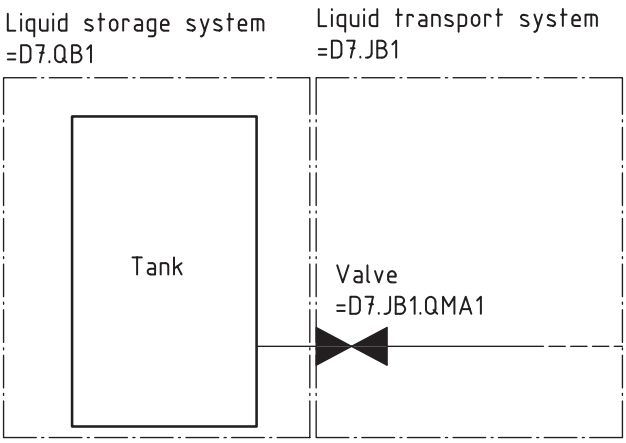

NOTE A valve is the separating agent between a liquid storage system (=D7.QB1) and a transport system (=D7.JB1). The valve is a sub-system of the transport system, not the storage system, because the transport system is the receiving system.

Figure 2 — Example of the receiver's ownership principle

The receiver's ownership principle is to be used in situations when doubt arises. Common sense and intuitive ownership should come first. The main goal is that systems should be where a future user expects them to be.

EXAMPLE The cord between a laptop and its charger constitutes the connecting agent between these two systems, with the laptop being the receiving system. The charger cord is however still a part of the charger, not the laptop.

The receiver's ownership principle can be used for all aspects.

5.3 Collector system principle

An exception to the receiver's ownership principle (see 5.2), in the functional aspect, is where multiple systems meet in a new system where energy, data or matter is collected. This is called the collector system principle. Examples are systems where a dominant feature is a busbar (i.e. collecting/distributing power to multiple other systems), or a liquid collection/distribution system.

For these systems the flow control system separating each supplying system to the collecting system should belong to the former. This is exemplified in Figure 3.

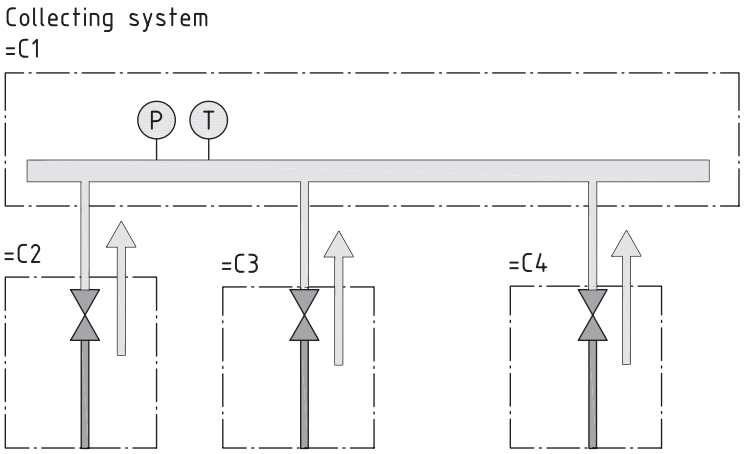

Figure 3 — Example of the collector system principle

It is useful from a process (or even safety) point of view to know which system is being isolated.

© ISO 2025 – All rights reserved

Documents
Document Sharing Hub
Full document details: PD ISO/TS 81346-101:2025

The collector system principle only applies to the functional aspect, not the product aspect, where an array of valves, such as the ones depicted in Figure 3 can be part of the collecting system -C1 (pointing to the same object individual as =C1).

This situation will often occur for switchgear systems, where breakers isolating a certain larger system are, in the product aspect, part of the switchgear system. However, in the functional aspect the breakers will be part of the systems to which the flow of electrical power is being controlled.

5.4 Classification according to inherent functionality

In accordance with the principles of IEC 81346-2, the object should always be classified according to what it was designed to do, not what it is being used for in a particular case.

EXAMPLE 1 Even if the overall function of the lubrification oil system is to reduce friction, the system supplying the lubrification oil does not see the final use of the oil, it just supplies it. It is a liquid matter supply system (JB), not a friction reduction system (KJ).

EXAMPLE 2 A valve opening the flow of the sprinkler system will have the effect of fighting fire. But the valve is a valve, it is a controlling device for flow, a QMA.

The overall use of a system will often be reflected by a parent system. In the case of Example 2 above, the valve (QMA) will most likely be a constituent of a firefighting system (PB).

5.5 Immaterial instantiation

In accordance with the principles of IEC 81346-1, instantiating the occurrences (object reference designations) should avoid situations where the numbering in itself carries meaning, including leading zeroes. Such information is considered metadata/properties of the object.

EXAMPLE =RA2, where “=RA2” is not necessarily the second generator (in any sense of the word).

The primary concern is to avoid situations where the instantiation carries technical information about the object in question that should be covered by the type aspect. Certain exceptions are acceptable for grouping/clustering purposes (see 5.7) and the type aspect (see 7.3). If a company selects to employ meaningful numbering, the rule should be well documented.

5.6 Parent system and sub-systems

If a system (e.g. HE) primarily affects a larger system (e.g. =D1.JB3), and only that, the former (HE) should be a sub-system of the latter (=D1.JB3). See “Distribution system 3”, the lower system in Figure 4.

If a system (HE) affects multiple larger system (e.g. =D1.JB1 and =D1.JB2), that system should be considered lifted to the same level as the two latter systems (=D1.JB1 and D1.JB2). See “Distribution system 1 and 2”, the two upper systems in Figure 4.

© ISO 2025 – All rights reserved

Documents
Document Sharing Hub
Full document details: PD ISO/TS 81346-101:2025

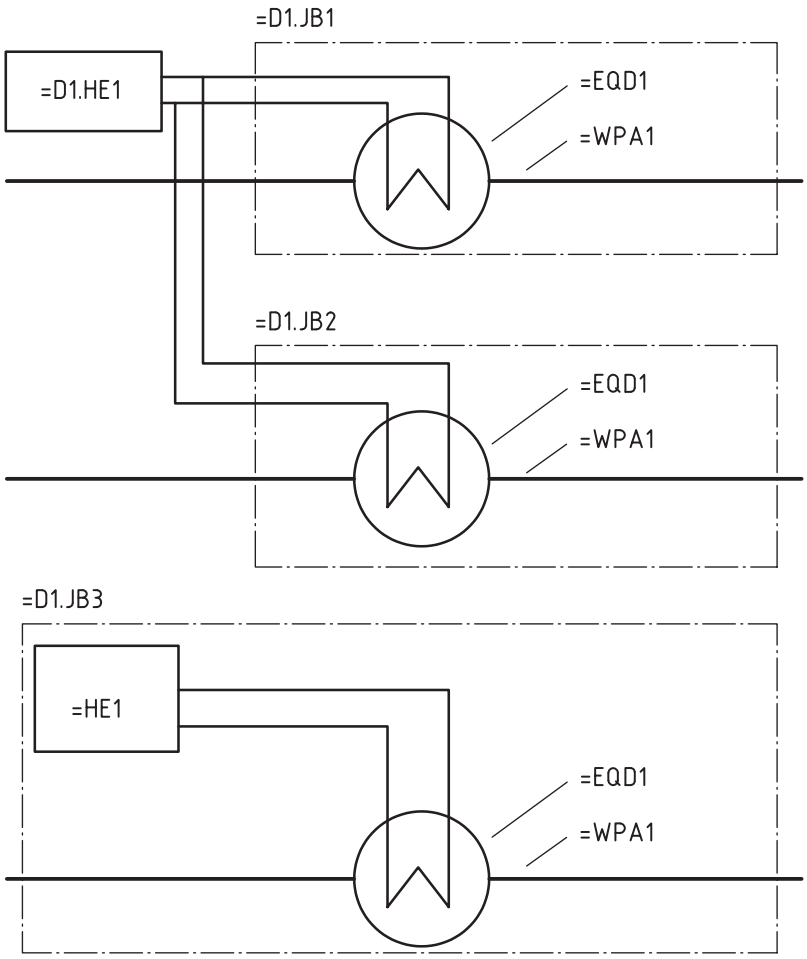

Key

=D1.JB1	cooling water distribution system 1
=D1.JB1.EQD1	cooling water distribution system 1, cooling system
=D1.JB1.WPA1	cooling water distribution system 1, distribution pipe
=D1.JB2	cooling water distribution system 2
=D1.JB2.EQD1	cooling water distribution system 2, cooling system
=D1.JB2.WPA1	cooling water distribution system 2, distribution pipe
=D1.HE1	cooling water supply (supplying distribution systems 1 and 2)
=D1.JB3	cooling water distribution system 3
=D1.JB3.EQD1	cooling water distribution system 3, cooling system
=D1.JB3.WPA1	cooling water distribution system 3, distribution pipe
=D1.JB3.HE1	cooling water distribution system 3, cooling water supply

Figure 4 — Example of structure showing cooling systems on different levels — P&ID

Figure 5 shows a model of an auxiliary water distribution system with its cooling system. Each of the major piping systems (=D1.JB1, =D1.JB2 and =D1.JB3) have their own cooling systems (=D1.JBn.EQD1). Each of the (EQD) cooling systems are sub-systems dedicated solely to their respective (JB) piping systems.

© ISO 2025 – All rights reserved

Documents
Document Sharing Hub
Full document details: PD ISO/TS 81346-101:2025

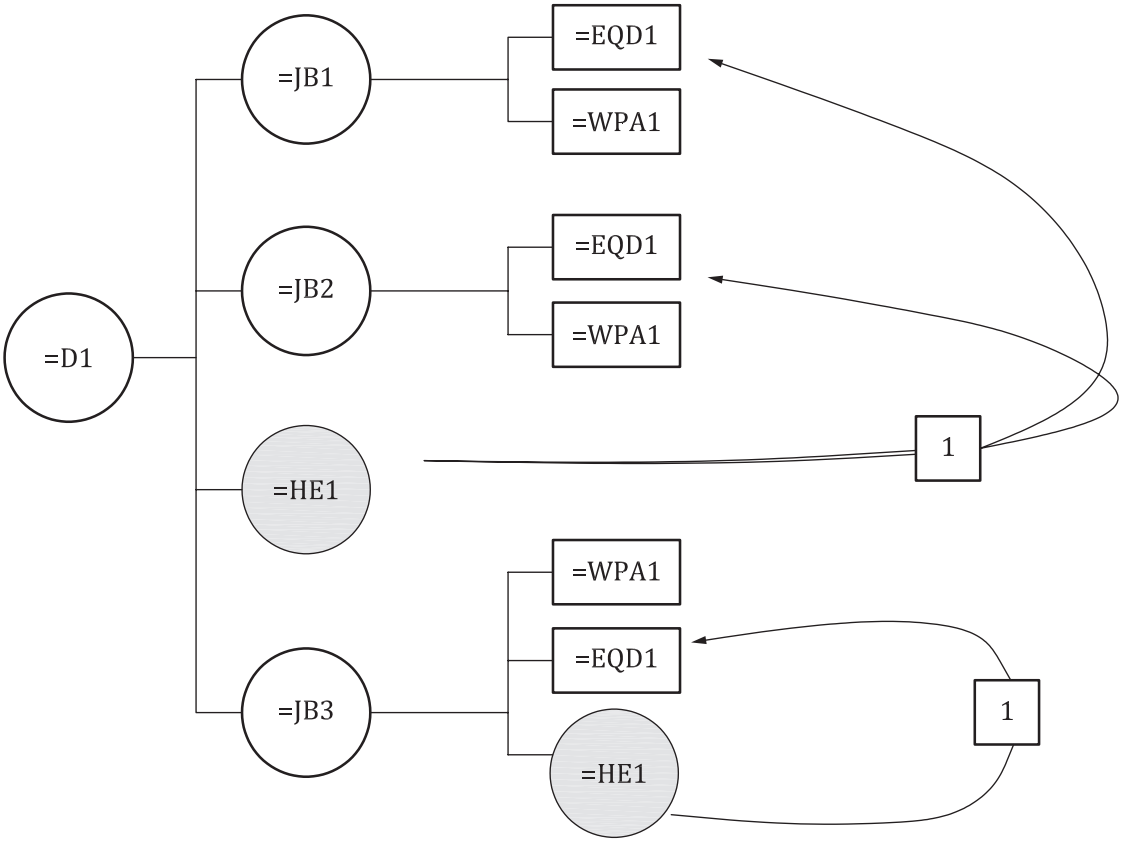

Key

1 supplying cooling water

Figure 5 — Example of structure showing cooling systems on different levels

Cooling water on the other hand is supplied to systems =D1.JB1 and D1.JB2 by a common cooling water supply system (=D1.HE1). Because this system is common to multiple systems on the second level of the structure it is also on the second level. The third distribution system (=D1.JB3) is particular in that it has a dedicated cooling water supply system (=D1.JB3.HE1). It is only supplying cooling water to this particular distribution system and is therefore a sub-system of it.

This proposed design guideline is not absolute. The second cooling water supply system (=D1.JB3.HE1) can already at this point be elevated to the second level of the structure (=D1.HE2) if, e.g.:

— it is expected (in the future) to feed a fourth piping system;

— it can be used as auxiliary supply systems to the other distribution systems;

— in similar situations, it is expected to feed multiple distribution systems.

5.7 Limited constituent systems

5.7.1 General

The RDS-structures provide the users with a clear overview of the object/system of interest and its constituent sub-systems. To ensure readability and use friendliness, the system should contain between 5 and 25 sub-systems; a guideline to the lower and upper limits of that range is given in 5.7.2 and 5.7.3.

© ISO 2025 – All rights reserved

Documents
Document Sharing Hub
Full document details: PD ISO/TS 81346-101:2025

5.7.2 Lower limit

In cases with systems that contain less than five sub-systems, it is recommended to review the structure and consider lifting the few sub-systems up one level; such as illustrated in the examples in Figure 6 and Figure 7, where the monitoring system (=LE1) was superfluous.

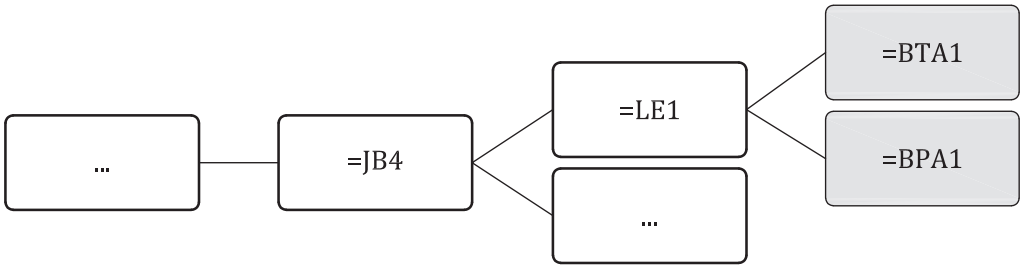

Key

...=JB4	oil distribution system
...=JB4.LE1	oil distribution system, monitoring system
...=JB4.LE1.BTA1	oil distribution system, monitoring system, temperature measurement
...=JB4.LE1.BPA1	oil distribution system, monitoring system, pressure measurement

Figure 6 — Example of a potentially unnecessary system

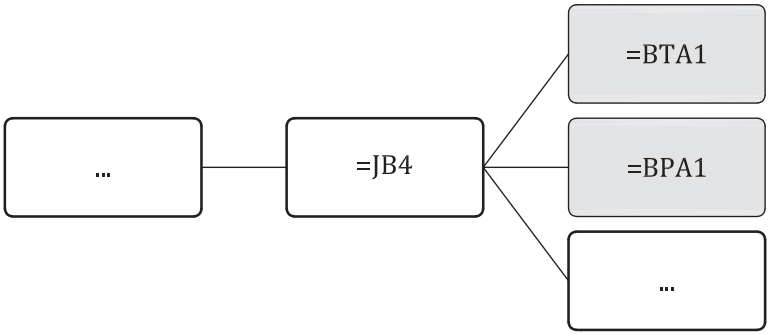

Key

...=JB4	oil distribution system
...=JB4.LE1.BTA1	oil distribution system, temperature measurement
...=JB4.LE1.BPA1	oil distribution system, pressure measurement

Figure 7 — Example of a simplified and improved structure

This principle is a general recommendation. There are many situations where only a few, or even a single sub-system should figure in the structure.

EXAMPLE If the oil distribution system 4 (=JB4) only had the one single temperature sensor system (=BTA1) as a child system, it can still belong there. The placement would indicate that the temperature sensor system is a sub-system of that particular oil distribution system.

5.7.3 Upper limit

Many industrial systems include extreme numbers of similar systems, such as lithium battery racks, solar panel arrays, or individual pipes or poles in a large distribution line. In these cases, the proposed upper limit of 25 can be difficult to follow.

Handling of a potentially extreme number of sibling systems can be done by creating multiple instances of parent systems and distributing the siblings between them by clusters. This can be done either by using the existing parent classes, or by creating a new level in the structure.

© ISO 2025 – All rights reserved

Documents
Document Sharing Hub
Full document details: PD ISO/TS 81346-101:2025

5.8 Modelling for the future

Modelling the systems should be done in accordance with the principles of the ISO 81346 and IEC 81346 series and this document. Modelling with the intent to retrofit old systems, or simply to appease old habits which can force a suboptimal solution, should be avoided.

It has often been a norm to group systems according to deliveries which shall be avoided in aspects that do not take this into account; the grouping shall rather follow the functional aspect.

EXAMPLE 1 Hydropower generator bearings are often grouped with the generator because they are supplied together.

A reference designation shall not be forcefully shortened to meet outdated requirements of old systems.

EXAMPLE 2 Some older SCADA systems are not able to handle object references (tags) of more than 30 characters.

5.9 Preferred semantics

For multi-level reference designations, full stop "." can be used between elements with only the first prefix as lead, as illustrated in Figure 8. This is in accordance with the rules of IEC 81346-1.

Although the readability is unaffected by the selection of one or the other, full stop is more commonly accepted by IT systems than equal, minus or plus signs.

=A1=KA1=JB1=QNA2

=A1.KA1.JB1.QNA2

Figure 8 — Example for preferred syntax

5.10 RDS implemented to multiple domains (RDS-PS and RDS-CW)

When modelling systems using the RDS, some class libraries will be better suited than others depending on the nature of the system in question. In particular ISO 81346-10:2022 (RDS-PS) and ISO 81346-12 (RDS-CW) provide different tables for functional ("main") systems and technical systems, corresponding to the power supply domain (PS), or the construction works domain (CW), in order. These are called "RDS libraries" in this subclause.

RDS-CW should be used for all systems belonging to the construction work domain. This includes buildings, general housing, garages and workshops, roads, access tunnels and so on.

Within the hydropower domain it also includes dams, which should be considered wall systems ("B" CW systems in accordance with ISO 81346-12). With regards to the water storage system, the reservoir function (i.e. the body of water behind the dam) and all sub-systems related to water management (even those located within the dam itself) should be considered part of a power supply storage system (E-systems, the reservoir system) and should be modelled using RDS-PS.

As illustrated in Figure 9, to distinguish and ensure unambiguity when reading the reference designations, the top node should reflect what RDS library has been used (see Clause 6).

© ISO 2025 – All rights reserved

Documents
Document Sharing Hub
Full document details: PD ISO/TS 81346-101:2025

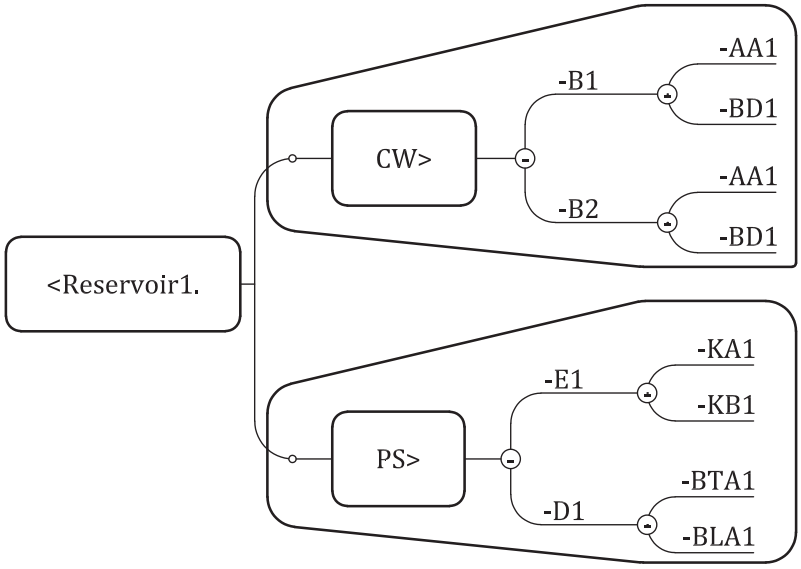

Key

<Reservoir1.CW>-B1	dam 1
<Reservoir1.CW>-B1.AA1	dam 1, top/road
<Reservoir1.CW>-B1.BD1	dam 1, dam structure
<Reservoir1.CW>-B2	dam 2
<Reservoir1.CW>-B2.AA1	dam 2, top/road
<Reservoir1.CW>-B2.BD1	dam 2, dam structure
<Reservoir1.PS>-E1	reservoir
<Reservoir1.PS>-E1.KA1	reservoir, flood gate system
<Reservoir1.PS>-E1.KB1	reservoir, overflow control system
<Reservoir1.PS>-D1	auxiliary monitoring
<Reservoir1.PS>-D1.BTA1	auxiliary monitoring, atmospheric temperature monitoring
<Reservoir1.PS>-D1.BLA1	auxiliary monitoring, snow depth monitoring

Figure 9 — Example of a reservoir, modelling the constituent power supply systems using ISO 81346-10:2022 and the constituent construction works systems using ISO 81346-12

In situations where multiple domains/libraries are used, there will often be situations where certain systems can rightfully belong to both structures or constitute the meeting point, or both, between the two domains.

Another example is shown in Figure 10.

© ISO 2025 – All rights reserved

Documents
Document Sharing Hub
Full document details: PD ISO/TS 81346-101:2025

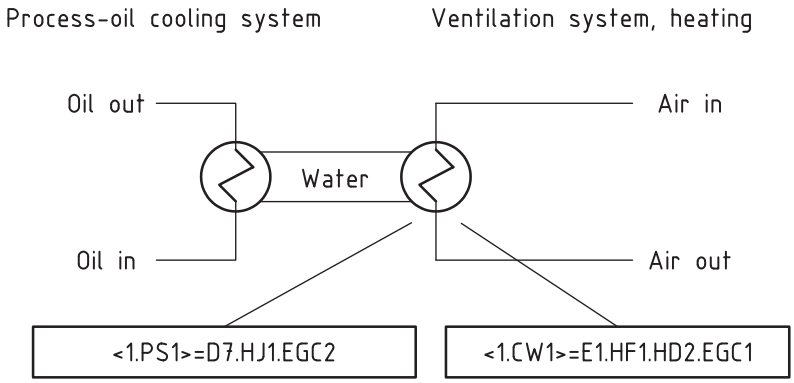

NOTE The heat-exchanger system in a plant extracts heat from process oil. This is part of the power supply system domain (RDS-PS). The heat is in turn extracted from the cooling water and used to pre-heat ventilation air in the building – a system within the construction works domain. The heat exchanger between these two systems, the water-air heat exchanger, can have two reference designations, one in each domain.

Figure 10 — Example of an object with both a PS and CW reference designation

Methods and principles to handle multiple reference designations to the same object are proposed in 12.2.

5.11 Use of the symbol "?"

In situations where component systems are required and should be added to a model, but details about them are yet undecided, there can be difficulties in assigning them a class.

EXAMPLE Is a certain temperature sensing object going to be a system with Boolean output (BTB), used to trigger alarms – or is the temperature sensing object going to be a system with scalar output (BTA), where the alarm is triggered by another system (potentially based on this scalar output)?

In these situations, the question mark "?" can be used in the last position of the reference designation, to indicate that the last letter is yet to be determined. This is illustrated in Figure 11 (=BT?1).

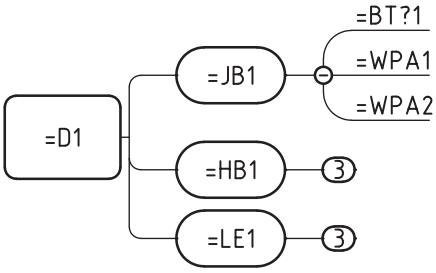

NOTE It is an important distinction that "BT?" is not a "Sensing object for temperature", which is the group definition for all component systems that start with BT. It means that the BT? system is either a BTA or a BTB.

Figure 11 — Example of the use of the question mark within reference designation

5.12 Structuring guidelines

For all systems, the user shall choose a class level, i.e. choose whether the object be designated by a prime system [_], technical system [_ _] or component system [_ _ _]. Some guidelines to support the choice are:

a) Only one prime system should exist in any multi-level reference designation. Potential exceptions are large, complex compact systems within power production facilities such as wind turbines.

EXAMPLE 1 =A1.KA1.WPA1 is acceptable, whereas =A1.B1.KA1.WPA1 is not recommended.

© ISO 2025 – All rights reserved

Documents
Document Sharing Hub
Full document details: PD ISO/TS 81346-101:2025

b) When working with structures modelling whole power plants (or systems of equivalent complexity), a multi-level RD should always start with a prime system class, with the exception of the application of RDS-CW on power supply systems (see structure identifier principles in 10.2).

EXAMPLE 2 =A1.KA1.WPA1 is acceptable, whereas =KA1.WPA1 is not recommended.

c) It is the designer's choice to model a second level (after a prime system) as a technical or component system. The complexity of the objects and the depth of the structure should be taken into consideration.

EXAMPLE 3 =A1.KA1 and =A1.WPA1 are acceptable.

d) It is suggested not to exceed three levels of technical systems before using component systems.

EXAMPLE 4 =A1.KA1.KA1.LE1.WPA1 is acceptable, whereas =A1.KA1.KA1.LE1.JB1.WPA1 is not recommended.

e) Once the structure reaches an object which can be characterised as an "of the shelf product" it should be modelled as a component system (e.g. a small general-purpose pump, a smart-sensor or a small valve).

EXAMPLE 5 For a standard, off the shelf valve, =A1[...]QMA1 is acceptable, whereas =A1[...]KA1 is not recommended.

f) A reference designation identifies systems on all levels. A reference designation does not need to end with a component system level.

EXAMPLE 6 =A1 and =A1.KA1 and =A1.KA1.WPA1 are all acceptable.

6 Top node

6.1 General

To discern similar systems from another, the RDS provides unambiguous object identifiers.

An unambiguous reference designation implies certainty to which single object/system the object points to within a given larger system (often a plant or a station). And the larger systems can themselves be designated by the top nodes, see Figure 12.

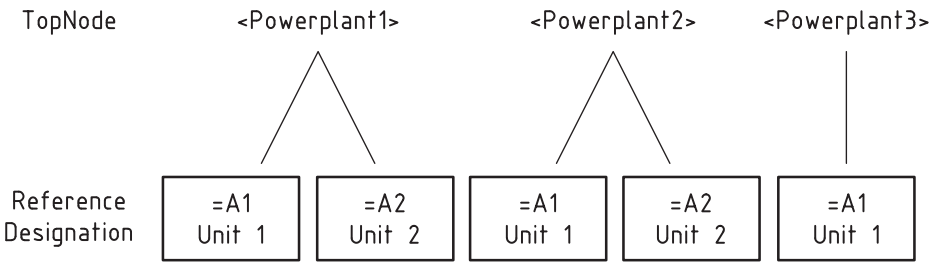

Figure 12 — The top node is the key to differentiate between similar systems in a full fleet/machine park overview

The top node is what gives any reference designation its context. The information contained within the top node is not regulated by the ISO 81346 and IEC 81346 series, but metadata information about the structure is (see IEC 81346-1:2022, Annex K). It is suggested that certain elements of the structure metadata should be found in the top node. This will help the readability and usability of the structures and provide unambiguity on a larger scale.

Elements to be added to the top node are proposed in 6.2, 6.3, 6.4 and 6.5, depending on the aspect chosen and the situation.

Each piece of information presented in 6.2, 6.3, 6.4 and 6.5 will also have a recommended metadata tag among the ones listed in IEC 81346-1:2022, Annex K (e.g. "ReferencedObjectId").

© ISO 2025 – All rights reserved

Documents
Document Sharing Hub
Full document details: PD ISO/TS 81346-101:2025

6.2 Top nodes identifying large systems (stations, plants and factories)

This is the proposed method to use the top node in the case where a large system (such as a photovoltaic power station, a hydropower station or a large stand-alone substation) is modelled by the RD hierarchical structure:

<SiteIdentifier.*Profile*.RDS-Library>

<Sophie11.*HP1*.PS1>

This RD includes the following elements:

1) Site identifier (ReferencedObjectId): The ReferencedObjectId identifies the object represented by the structure (the modelled system), the power plant/station/wind farm/transmission line site. Geographic location name or code, a power plant name or a code-id associated to it can be used. The identifier should end with a number but does not have to contain letters.

EXAMPLE 1 Sophie11, Viking11, Itaipu1 or 2109

2) Profile (StructureId) – Optional: The StructureId should refer to an application profile used for RDS modelling. This information can aid in the understanding of the structure. To differentiate according to the technology type, the proposed syntax “HP” for HydroPower, “WP” for WindPower, “PV” for PhotoVoltaic, “SS” for SubStation, etc., can be used. The numbering in the end should reflect the edition of the profile.

EXAMPLE 2 HP1 or WP1

3) RDS-Library (RdsDomainId): The RdsDomainId should point to the reference designation classes domain used (also known as “RDS library” in this document). ISO 81346-10:2022 and ISO 81346-12 define classes for Power supply Systems and Construction Works. The abbreviations PS and CW can be used along with a number indicating the respective edition of the applicable document (the StructureVersionId).

EXAMPLE 3 PS1 or CW1

Each variation of the top node represents its own model. For a single power plant (same site identifier), each profile, RDS-Library, or indeed aspect will present a different model of the same power plant, such as exemplified in Table 2.

Table 2 — Example of systems represented in different models of the same power plant

Top node site identifier	Top node profile	Top node library	Aspect	Example of RD
PowerPlant1	HP1	PS1	= (Functional aspect)	<PowerPlant1.HP1.PS1>=A1
PowerPlant1	HP1	PS1	- (Functional aspect)	<PowerPlant1.HP1.PS1>-A1
PowerPlant1	HP1	PS1	+ (Functional aspect)	<PowerPlant1.HP1.PS1>+A1
PowerPlant1	HP1	CW1	= (Functional aspect)	<PowerPlant1.HP1.CW1>=A1
PowerPlant1	HP1	CW1	- (Functional aspect)	<PowerPlant1.HP1.CW1>-A1

6.3 Other purpose top nodes — temporary structures

6.3.1 General

Some structures are created to meet a need of limited temporary purpose. The context and therefore the temporary reference designation structures/models depend on the nature of the creation/use of the structure.

Some examples are given in 6.3.2 and 6.3.3.

© ISO 2025 – All rights reserved

Documents
Document Sharing Hub
Full document details: PD ISO/TS 81346-101:2025

6.3.2 Orders and bills of materials

In this example, a list a of materials provided by a supplier for the construction of a particular system (see example in 7.4.3) is considered:

<ProjectID/RecurID.OrderID.Profile.RDS-Library>

<HDrefurb2020.Order023.HP1.PS1>

The RD includes the following elements:

1) ProjectID (StructureIdDomainId): The ReferencedObjectId should identify the time-dependent context, such as a project identifier or a contract number. The identifier should end with a number but does not have to contain letters.

EXAMPLE 1 HDrefurb2020, B2054 or 6112020

2) RecurID (StructureIdDomainId): StructureIdDomainId can be used to identify recurrent tasks and potentially locations. The identifier should end with a number but does not have to contain letters.

EXAMPLE 2 A1001 or B1003 with:

— Class A: replenishment of workshop reserve-parts stock;

— Class B: replenishment of workshop tools and consumables;

— 1001/1003: identifier of the workshop/location.

3) OrderID (ReferencedObjectId): The ReferencedObjectId should identify the object described by the structure (the modelled system). This can be an order identifier, contract number or equivalent. To be able to separate this identifier from the others in the top node it is recommended to start the identifier with a letter and end it with a number.

EXAMPLE 3 Order023 or TX3456 or nr12345

4) Profile (StructureId) — Optional: The StructureId should refer to an application profile used for RDS modelling. This information can aid in the understanding of the structure. To differentiate according to the technology type, the proposed syntax is “HP” for HydroPower, “WP” for WindPower, “PV” for PhotoVoltaic, “SS” for SubStation, etc. The numbering in the end should reflect the edition of the profile.

EXAMPLE 4 HP1 or WP1

5) RDS-Library (RdsDomainId): The RdsDomainId should point to the reference designation classes (domain) used. ISO 81346-10:2022 and ISO 81346-12 define class-tables for Power supply Systems and Construction Works. The abbreviations PS and CW should be used along with a numbering indicating the edition of the standard parts (the StructureVersionId).

EXAMPLE 5 PS1 or CW1

If a material order contains items belonging to both domains (e.g. pumps, valves and joins but also concrete, plugs and steel framework), then two structures should be created.

EXAMPLE 6 <A1001.Order345.PS1> and <A1001.Order345.CW1>

6.3.3 Modular tasks and views, temporary structures

For some projects and tasks system grouping and modularization can be helpful for the organization of information, tasks and work:

<ProjectID.TaskID.Profile.RDS-Library>

<B2345.03.HP1.PS1>

© ISO 2025 – All rights reserved

Documents
Document Sharing Hub
Full document details: PD ISO/TS 81346-101:2025

Structures can be created to clarify and/or support the work if:

— different actors work on different parts of a system (e.g. entrepreneur X is responsible for systems -A1, and entrepreneur Y for -A2);

— a difference in timeline of the project shall be visible (e.g. -A1 systems will be constructed during the first month of the project, then -A2 and -A3);

— HSE issues should be grouped (e.g. -A1 systems are to be created in a temporary potential toxic environment (marsh gases));

— other structuring needs based on other factors than physical assembly or function.

The structure of the top node would look similar to the one described in 6.3.2 (for bills of materials) with a TaskID (ReferencedObjectId, instead of an OrderID), selected to represent the temporary task within the project.

EXAMPLE

01: Design and planning

02: Purchase and delivery

03: Construction on site A

04: Construction on site B

6.4 Top nodes for cataloguing purposes

This application would typically come from supplier documentation, describing a certain system in detail without allocating it in a larger functional structure which would reflect what it is being used for.

As an example, a pump is to be supplied with a full set of documentation describing in detail its parts and assembly. The drawings and documentation all refer to the structure in the product aspect modelling the pump:

<CompanyID.SystemID.Profile.RDS-Library>

<SuperSupplier1.Pump6300.HP1.PS1>

The RD includes the following elements:

1) CompanyID (StructureIdDomainId): The StructureIdDomainId can be used to identify the supplier of the system. This piece of information can be added by a client after purchase to help identify the modelled system.

EXAMPLE 1 SuperSupplier1, s987876

2) SystemID (ReferencedObjectId): The ReferencedObjectId identifies the object described by the structure (the modelled system). This can be done in numerous ways depending on each company's internal information structure principles. Internal designations can be asset codes, a reference to a catalogue or systems library.

EXAMPLE 2 SnowRacer5000, B1A1AA1

Once the system has been purchased, the reference designation structure can be appended to the larger system structure.

A supplier of a given system (e.g. a valve) can, along with the delivery, supply a full RDS-structure modelling the component in question. This will be useful for cross-reference and identification in the documentation attached to the object.

The operator incorporating the new system in a larger scheme (e.g. a power plant), can directly incorporate the supplier's RDS-structure into the full structure of the larger system. This is illustrated in Figure 13.

© ISO 2025 – All rights reserved

Documents
Document Sharing Hub
Full document details: PD ISO/TS 81346-101:2025

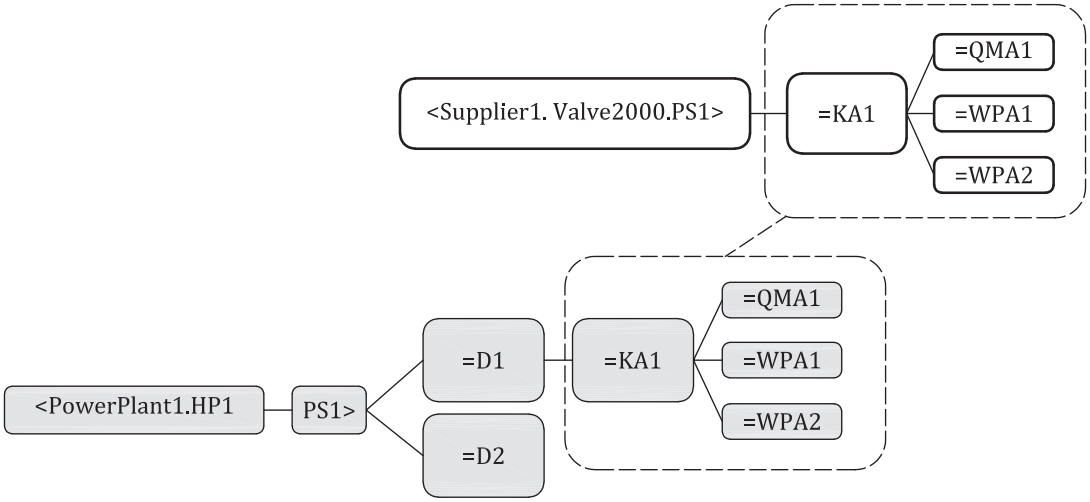

Figure 13 — Example of an integration of a lesser system into a larger system

This will be useful for both the operator and the supplier as the supplied documentation will still refer to the structure in use by the operator. This will minimize errors in identification of subcomponents and systems during later operation and maintenance.

6.5 Other purpose top nodes — (%) type aspects top nodes

The type aspect provides a mean to classify further within the common RDS classes. It is a tool for information structuring, organizing, filtering and sub-grouping. There are many ways the aspect can be employed to aid an organization, as such it needs a flexibility of use. There is however a need to contextualize the type aspect, as there are multiple different interpretations of the type classes.

As an example, a KA system can have different types defined, depending on the information user – defined for different purposes: the HydrType can be created by the hydrology department, and the MaintType by the maintenance department (see Table 3).

Table 3 — Example for a KA system with different types defined

HydrType	MaintType
%KA1 – Water control systems for flows below 1 m^3/s	%KA1 – Gates
%KA2 – Water control systems for flows above 1 m^3/s	%KA2 – Valves

A dedicated top node can be used to contextualise/identify tables of class types:

<DomainID.RDS-Library>

<MaintType.PS1>

The RD includes the following element:

DomainID (StructureIdDomainId): The StructureIdDomainId can be used to identify the type aspect tables. In addition to internal types, system suppliers can have their own definitions. That information can be relevant to add to the RD-set of the object of interest.

EXAMPLE The Inlet gate system of “PowerPlant 4” has the following RD-set:

<PowerPlant4.PS1>=C1.KA1

<PowerPlant4.PS1>-C1.KA1

<HydrType.PS1>%KA2

<MaintType.PS1>%KA2

© ISO 2025 – All rights reserved

Documents
Document Sharing Hub
Full document details: PD ISO/TS 81346-101:2025

<SupplierCompanyX.PS1>%KA34

7 Aspects

7.1 Reference designation sets

7.1.1 General

The use of the reference designations of an object within different aspects creates a clear overview of the systems unencumbered by irrelevant information for specific tasks. Depending on the IT-tool, the setting, or the required type of information, one aspect is likely to be better suited than the others. For example, the location aspect would be best suited for any map-based application (notably GIS-systems).

The collection of reference designations designating a particular object, called a reference designation set (RD-set), can be created stepwise in a project. Identifying an object at an early stage (often using the functional or product aspect) helps to keep track of the object in question, as other designations can be added to the RD-set as the project moves along.

It is the RD-sets (see Figure 14) that will be the key to navigate different systems and domains. In any given situation, one aspect is going to be dominant (e.g. for maps, where navigating the physical locational structures would be based on the ++site of location). Once an object/space of interest has been reached, the other aspect RD will be the key to gather information about the object/space in other systems.

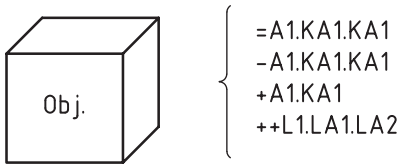

Figure 14 — RD-set

EXAMPLE All systems, identifiable by their reference designation in the functional aspect (e.g. =A1.RB1 and =A1.KA1 in Figure 15*)* located in a specific space, would share a location reference designation. By using the location aspect in e.g. a building information model (BIM) system, to navigate to a specific room ++L1.LA1.LA2.DAC1, where functions performed within that location would be grouped.

© ISO 2025 – All rights reserved

Documents
Document Sharing Hub
Full document details: PD ISO/TS 81346-101:2025

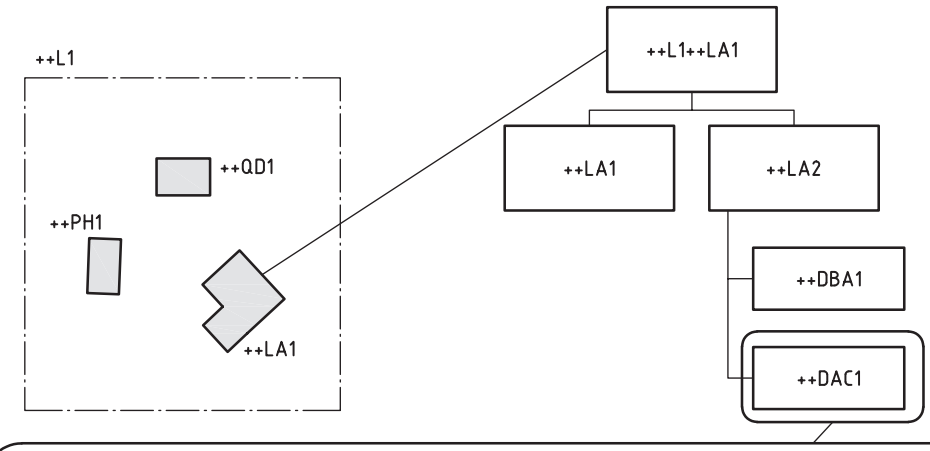

Location RD	Location name	Functional RD	Function name
++L1.LA1.LA2.DBA1.DAC1	2nd flr, mech eq. space	=A1.RB1	Turbine 1
++L1.LA1.LA2.DBA1.DAC1	2nd flr, mech eq. space	=A1.KA1	Main valve 1
++L1.LA1.LA2.DBA1.DAC1	2nd flr, mech eq. space	=A1.RB1.BPA11	Turbine inlet pressure
++L1.LA1.LA2.DBA1.DAC1	2nd flr, mech eq. space	=A1.RB1.BPA21	Turbine outlet pressure

Key

++L1	power plant complex
++L1.QD1	garage
++L1.PH1	workshop
++L1.LA1	hydropower plant
++L1.LA1.LA1	hydropower plant, first floor
++L1.LA1.LA2	hydropower plant, second floor
++L1.LA1.LA2.DBA1	hydropower plant, second floor, control equipment space1
++L1.LA1.LA2.DAC1	hydropower plant, second floor, mechanical installation space

Figure 15 — Functions located in a specific room

7.1.2 Semantics

Usually RD-sets are expressed by dedicating a new line to each RD. RDs part of an RD-set can however be expressed in one line when separated with a slash "/". RDs in a RD-set will not always have the same top node, if this is the case the top node shall also be indicated.

EXAMPLE

If top nodes are the same:	++D1.DD1.DDD2/-B2.BB2.DDD1
If not:	<TopNode1>++D1.DD1.DDD2/<TopNode2>-B2.BB2.DDD1

Annex A and Annex B contain other examples of the creation and use of an RD-set.

7.2 Functional aspect [=]

The proposed use for the functional aspect is in P&IDs, general process diagrams, topology overviews or overview diagrams (single-line, multiline, etc.). With regards to signals and data tags, it is recommended that the functional aspect structure is used to identify the relevant owning asset. A signal tag should be created by combining a reference designation with another standardized tag, such as the signal modelling system of the IEC 61850-7 series.

© ISO 2025 – All rights reserved

Documents
Document Sharing Hub
Full document details: PD ISO/TS 81346-101:2025

The functional aspect structure shows the hierarchical structure of systems functionalities. It shows what systems are intended to do, and how they do it (what functions work together to accomplish a more aggregated function).

The functional aspect will mainly be used to structure systems related to process flow. As such, it is recommened to select what systems to model as follows:

Systems related to a signal or measurement (systems related to the "process" point of view) should be modelled, i.e. systems expected to be part of a P&ID or a single-line diagram. Other systems, although having a functionality, will be visible only in the product aspect (e.g. covers, support beams, wires). Asset data (mechanical attributes or object individual related data) is information usually held by systems where the product aspect is prominent.

In Figure 16, only process-related levels are visible (no cover, housing, screws, or other mechanical components exist in the structure).

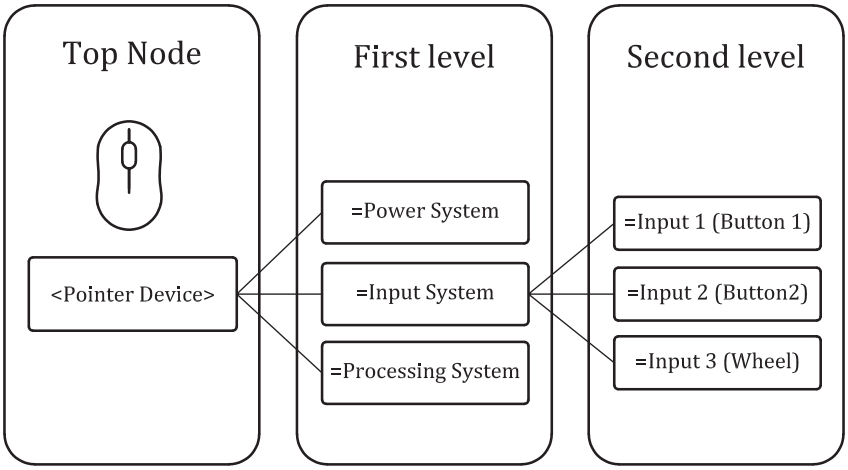

Figure 16 — Functional aspect — Example 1: A computer mouse

The functional aspect structures are generally reliably stable because the functional requirements for a process are stable, while the choice of equipment type, applied physical solution and geographic location of any given system can vary and evolve over time. For example, an elevator system will always need a driving function (motor), whether it is hand-driven, located at the top or bottom of the building, and regardless of how it is assembled.

The functionals structure will often be similar to the product aspect, especially for the upper levels. It will however likely have fewer constituent systems and likely fewer levels to the full model.

The function aspect offers a way of structuring the system functionalities in a way that both supports and adds to the understanding of the role of the object within a larger system.

In Figure 17, the overflow valve =D4.HB1.QB1.QMA2 is a sub-system to the oil storage system.

© ISO 2025 – All rights reserved

Documents
Document Sharing Hub
Full document details: PD ISO/TS 81346-101:2025

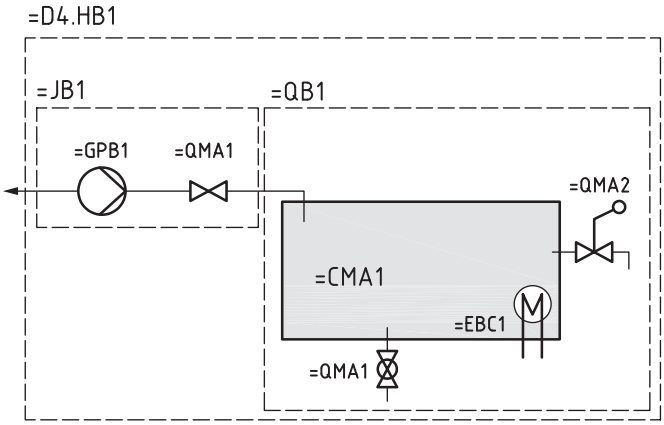

Key

=D4.HB1	aux syst. 4, oil supply
=D4.HB1.JB1	aux syst. 4, oil supply, oil transport
=D4.HB1.JB1.GPB1	aux syst. 4, oil supply, oil transport, Pump
=D4.HB1.JB1.QMA1	aux syst. 4, oil supply, oil transport, Valve
=D4.HB1.QB1	aux syst. 4, oil supply, oil storage
=D4.HB1.QB1.CMA1	aux syst. 4, oil supply, oil storage, tank
=D4.HB1.QB1.EBC1	aux syst. 4, oil supply, oil storage, heater
=D4.HB1.QB1.QMA1	aux syst. 4, oil supply, oil storage, drain valve
=D4.HB1.QB1.QMA2	aux syst. 4, oil supply, oil storage, overflow valve

Figure 17 — Functional aspect — Example 2: An oil supply system

7.3 Type aspect [%]

The use of the type aspect, exemplified in Figure 18, provides the means to subdivide the classes defined in the ISO 81346 and IEC 81346 series. It is a handy tool to provide additional information about the object of interest while remaining in the RDS framework.

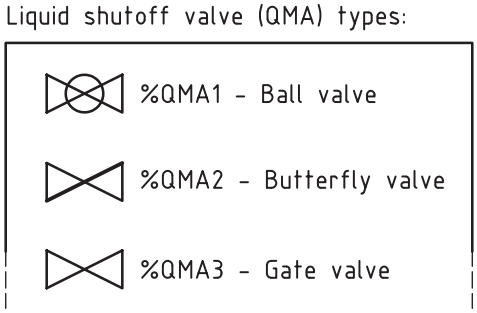

Figure 18 — Type aspect

The type aspect can be useful in applications where either the functional or the product aspect is predominant.

The aspect is suited for situations and application when listing requirements which can be associated to certain system types.

EXAMPLE 1 Electronic equipment can be designed to work with either AC or DC currents, “%XDA1” for AC type electrical terminal, and “%XDA2” for DC type electrical terminal.

© ISO 2025 – All rights reserved

Documents
Document Sharing Hub
Full document details: PD ISO/TS 81346-101:2025

It can also be used in the setting of grouping for comparison. For example, to be able to compare the age of all slide-gates in a portfolio, it would be useful to be able to detail the gate class (KA), which is the class generic for all gates, valves, breakers and more. It would be useful to sort out all KA-systems by types to provide useful comparisons, e.g. by picking and comparing all %KA1.KA2 (Gate systems, slide gates).

The type structure is a natural part of an ontology to define type-of associations.

Types classes are not defined by the ISO 81346 and IEC 81346 series; this means that a type library can be tailored for specific purposes or deliveries. The type aspect is an information holding tool, but the regulations and rules of application are practically non-existent. Different parties confronted with the type aspect should not assume a shared understanding of the classes. The type-library should be clearly stated, see suggestions on the use of the top node for this purpose in 6.5.

A suggested type structure for power supply equipment is to couple equipment types to the ones listed in the IEC Common Data Dictionary (CDD).[1] Four domains are available through the CDD:

— electric/electronic components (IEC 61360-4 [2]);

— process automation (IEC 61987 series);

— low voltage switchgear (IEC 62683-1);

— measuring equipment for electrical quantities (IEC/TR 63213).

The type aspects should, as far as possible, be employed to mirror and fill the structure of the CDD.

Some classes have their equivalent in both standards and do not require the creation of a new type.

EXAMPLE 2 Linear stepping motors, which are represented by the AAA164 classes in IEC 61360-4 and by the MBB class in IEC 81346-2:2019). See Table 4.

Because the CDD is much more detailed in their equipment classifications, there are many classes whose equivalent will have to be created as type-classes of the generic IEC 81346-2 classes.

EXAMPLE 3 Linear DC motor, AAA163 in the CDD, but this is a narrower description of the IEC 81346 class MBA. To correctly mirror the class definition, a type of MBA is defined. See Table 4.

Table 4 — Example for a CDD/RDS conversion

CDD — Motor classes (IEC 61360-4)	RDS — Motor class types (IEC 81346-2:2019)
AAA 160 – motor	*not available*
AAA 161 – linear motor	MBA – electromagnetic linear driving object providing a continuous movement
AAA 162 – linear ac motor	%MBA1 – linear ac motor
AAA 163 – linear dc motor	%MBA2 – linear dc motor
AAA 165 – linear universal motor	%MBA3 – linear universal motor
AAA 164 – linear stepping motor	MBB – electromagnetic linear driving object providing a continuous movement
AAA 166 – rotational motor	MAA – electromagnetic rotational driving object providing continuous rotation
AAA 167 – rotational ac motor	%MAA1 – rotational ac motor
AAA 168 – rotational dc motor	%MAA2 – rotational dc motor
AAA 170 – rotational universal motor	%MAA3 – rotational universal motor
AAA 169 – rotational stepping motor	MAB – electromagnetic rotational driving object providing discrete rotational steps

1) Component Data Dictionary (CDD - V2.0011.0002). Online database featuring 440 classes and 1 400 characteristic properties for electric/electronic components and materials. Free access to database: https://std.iec.ch/iec61360

2) Withdrawn.

© ISO 2025 – All rights reserved

Documents
Document Sharing Hub
Full document details: PD ISO/TS 81346-101:2025

7.4 Product aspect [-]

7.4.1 General

The product aspect, exemplified in the Figure 19, shall not be confused with the type aspect. The product aspect does not present a view of "products" fulfilling specific functions, but it provides the means for modelling systems by the nature of their composing systems, i.e. systems are grouped to constitute their parent-systems.

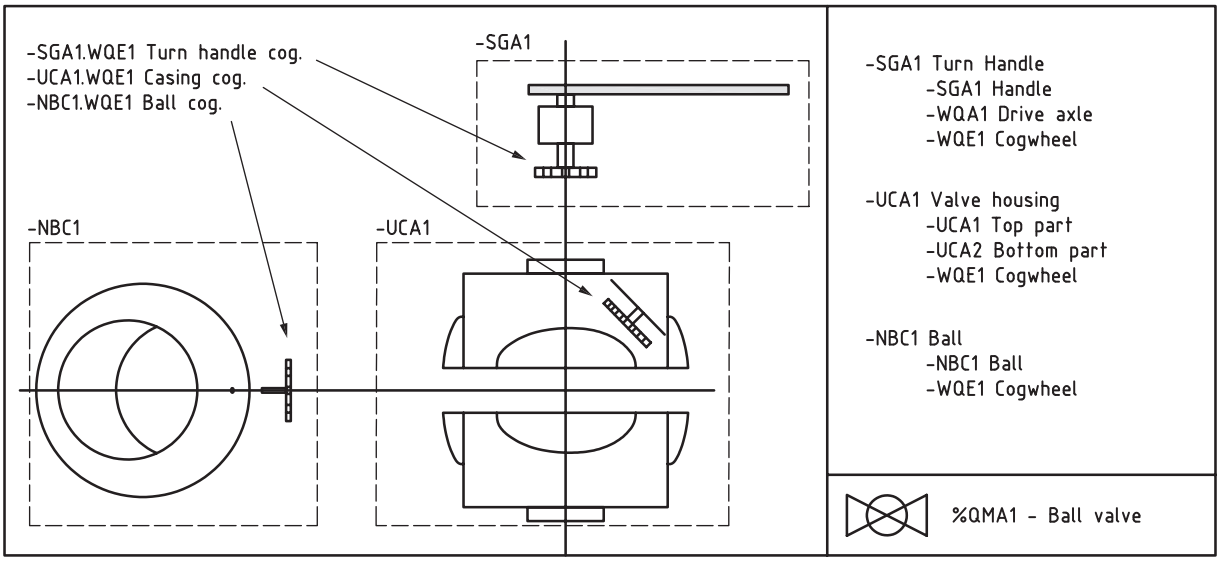

Figure 19 — Product aspect

There are several ways of interpreting/using the product aspect, they are detailed in 7.4.2 and 7.4.3.

7.4.2 Assembly structure

The most common use of the aspect (denoted here as the "assembly" take on the aspect), will be used to represent the physical associations between systems in a hierarchical structure, such as shown in Figure 20 and Figure 21. This take on the product aspect is well suited for e.g. assembly drawings where the physical construction of machines or assemblies is viewed and explained.

© ISO 2025 – All rights reserved

Documents
Document Sharing Hub
Full document details: PD ISO/TS 81346-101:2025

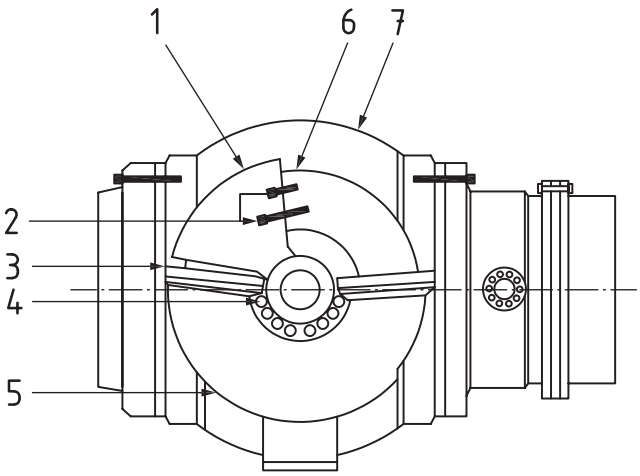

Key

1 force link
2 pin bolt
3 axle
4 bolt system
5 piston housing
6 piston shaft
7 valve body

Figure 20 — Example of the use of the product aspect to structure a physical component — Drawing

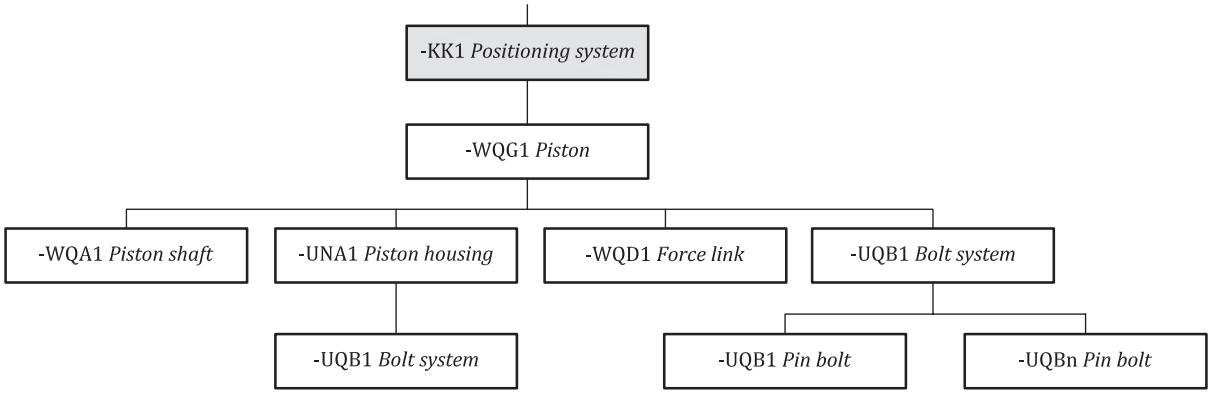

Figure 21 — Example of the use of the product aspect to structure a physical component — Structure

This aspect is useful for the production and assembly stages of a component life cycle, but also for most maintenance and work planning. This aspect is typically preferred by maintenance staff and for system suppliers as it is well suited for identification of components not typically relevant in the functional aspect models.

As it becomes evident when comparing the example in Figure 22 to the functional structure in Figure 16, the product structure is more complex and displays more constituent systems than the functional aspect. Some of the subsystems are obviously related (button input for instance) and will be part of the same RD-sets.

© ISO 2025 – All rights reserved

Documents
Document Sharing Hub
Full document details: PD ISO/TS 81346-101:2025

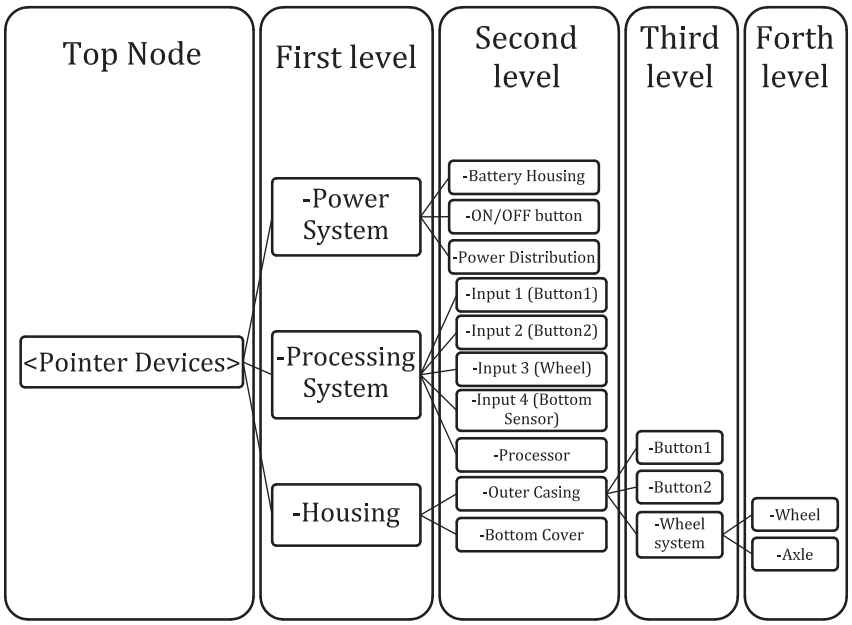

Figure 22 — Product aspect illustration — A computer mouse

Cubicles and power component cabinets will see the benefits of the product aspect, as they are often manufactured/assembled prior to installation. The product aspect will provide the means to create a descriptive structure limited to the cubicle and its components, disregarding the components placement in a larger structure in the functional aspect.

7.4.3 Bill of material structures

The product aspect is also relevant for purchasing/ordering purposes e.g. for bills of materials or when a supplier proposes a detailed offer featuring many systems, which when employed can be functionally unrelated or geographically separated, or both.

Figure 23 shows the example of an order for a multitude of plumbing components, organized in an offer where groups of components have been grouped according to project specific needs (e.g. shipment waves or locations).

Group 1 - Pipes and valves 1 (JB1) - 1 000 £ - Pipe 1 (-JB1.WPA1) - Pipe n (-JB1.WPAn) - Valve 1 (-JB1.QNA1) Group 2 - Pipes and valves 2 (JB2) - 1 000 £ -Pipe 1 (-JB2.WPA1) -Pipe n (-JB2.WPAn) -Valve 1 (-JB2.QNA1) Group 3 - Filters (KC1) - 500 £ - Oil filter 1 (-KC2.HQB1/%HQB1) - Oil filter n (-KC2.HQBn/%HQB1) - Water filter 1 (-KC2.HQBn+1/%HQB2) Sum(-JB1, -JB2 & -KC1) : 2 500 £	%HQB1 - Filter type 1: Oil filter %HQB2 - Filter type 2: Water filter

Figure 23 — Example of the use of the product aspect to structure content

© ISO 2025 – All rights reserved

Documents
Document Sharing Hub
Full document details: PD ISO/TS 81346-101:2025

Once shipped and installed, the components can be part of different models and acquire new reference designations.

EXAMPLE A certain pipe (see Figure 23) can have the RD-set:

<Owner1>=D1.HB1.WPA1

<Owner1>-D1.HB1.JB1.WPA1

<MasterInc.Purchase1234>-JB1.WPA1

7.5 Location aspect [+Host of installation]

The host of installation system (see ISO 81346-10:2022) provides information about objects physical situation. This is done by designating the system physically hosting the object of interest, i.e. the object of interest is physically placed either on or inside the hosting system.

The hosting system is identified using its product reference designation. To indicate that the reference designation is the host of installation aspect, the product aspect prefix "-" is replaced with the location aspect prefix "+" as exemplified in Figure 24.

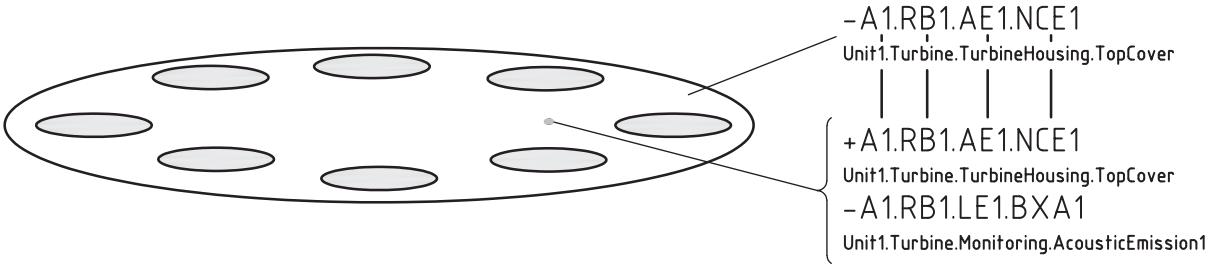

Figure 24 — Host of installation illustration

EXAMPLE A control unit -D8.[...].KEB1, is located inside one of the control system cubicles of another system: -F4.[...].UCA2. The cubicle is hosting the control unit. (Part of) the RD-set for the control unit:

-D8.[...].KEB1

+F4.[...].UCA2

The aspect is useful for a number of situations and cases, notably to identify the cubicle in which electro components (such as a fuse, breaker or control unit) are located, or sensor placements.

7.6 Location aspect [++Site of installation]

7.6.1 General

Site of installation, exemplified by Figure 25, provides the means to point out a physical location (without referring to any other structure defined by another aspect).

© ISO 2025 – All rights reserved

Documents
Document Sharing Hub
Full document details: PD ISO/TS 81346-101:2025

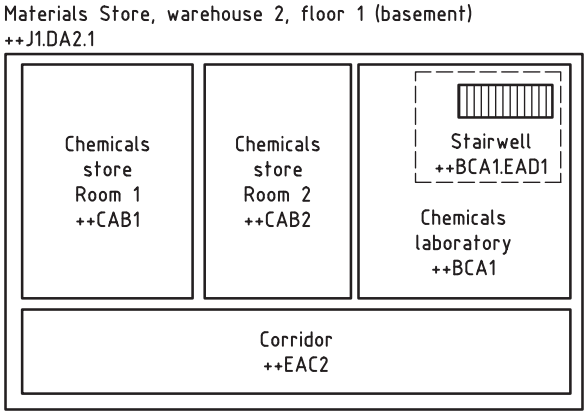

Figure 25 — Site of installation aspect

The site of installation is different from the other aspects in that it employs its own distinct class tables. Figure 26 illustrates the three classes representing the different levels of abstraction available: construction complexes, construction entities and installation spaces (one-, two- or three-letter codes, in order). They are all available in IEC 81346-2.

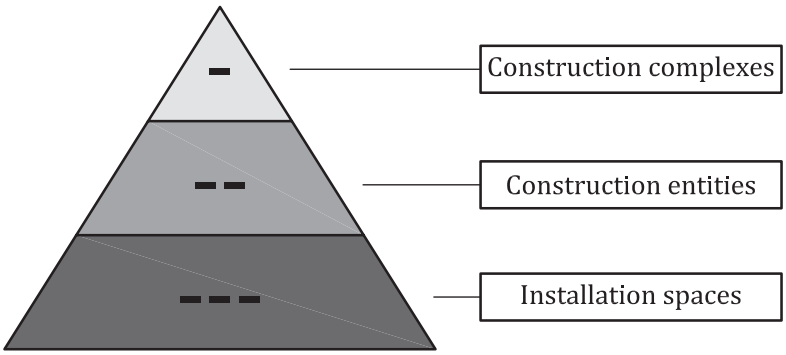

Figure 26 — RDS-libraries for host of installation aspect

The site of installation is typically the aspect preferred for 3D-representation, maps and geographic location-based information systems such as a Geographic Information System (GIS) or Building Information Model (BIM) systems (ISO 19650 series).

Figure 27 illustrates a situation where an electrical cable is stretched over three different spaces.

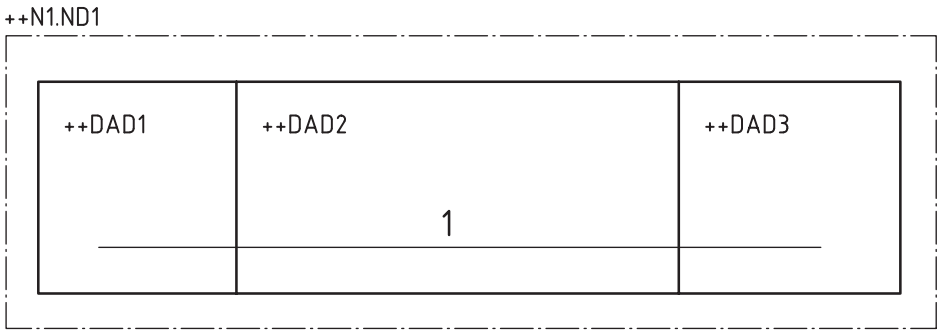

Key

1 electrical cable =D1.JE1

Figure 27 — Example of the benefit of the use of the full RD-set

The parts of the cable in each of the three spaces have the following RD-sets:

© ISO 2025 – All rights reserved

Documents
Document Sharing Hub
Full document details: PD ISO/TS 81346-101:2025

=D1.JE1	=D1.JE1	=D1.JE1
++N1.ND1.DAD1	++N1.ND1.DAD2	++N1.ND1.DAD3

By labelling the cable with its functional (or product) aspect reference designation, one can identify the cable across the spaces it goes through.

7.6.2 Levels and floors

7.6.2.1 General

It is in the nature of the location aspect that the RD of an object should also contain information about the floor/level in which the object can be found. This causes a dilemma. The floor level is represented by a number, and according to best practice, numbers should not hold any meaning, nor should numbers alone be used to represent a level in a reference designation.

The level can be introduced into the object RD in three ways, as described in 7.6.2.2 (repeated entity level), 7.6.2.3 (stand-alone level) and 7.6.2.4 (space numbering including level). All represent exceptions in the application of general modelling principles regarding the use of numbering.

The choice of method to represent the level in a construction entity should be well documented, and detailed, either through a description or through a reference to one of the three methods proposed in this document.

7.6.2.2 Repeated entity level

A first solution, illustrated in Figure 28, is to add a distinct level in the RD as the last technical system level (i.e. the last construction entity (two-letter code) level before the space of installation (three-letter code) levels). This will often refer to a repetition of the former's class-code.

EXAMPLE ++L1.LA1.LA2.DAC1

The use of this concept does have some requirements, as the last entity-level (the second "LA" level in the example) is understood as the bearer of the floor level information.

This is the recommended solution for use on power plants, even if this level-instantiation does carry meaning. It is an unavoidable problem as levels in a building are of a numeric nature.

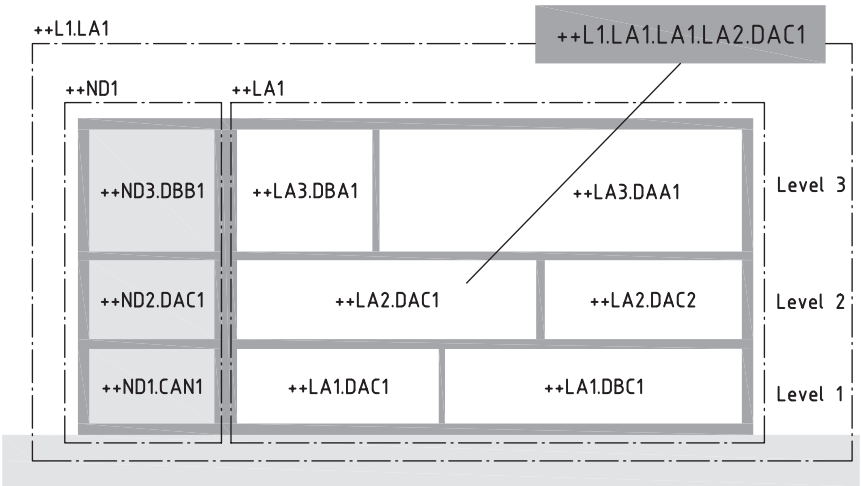

Key

++L1.LA1	power plant
++L1.LA1.ND1	power plant, workshop
++L1.LA1.LA1	power plant, power plant

Figure 28 — First principle for level numbering in the RDS location aspect — Repeated entity level

© ISO 2025 – All rights reserved

Documents
Document Sharing Hub
Full document details: PD ISO/TS 81346-101:2025

7.6.2.3 Stand-alone level

The potentially most user-friendly solution, illustrated in Figure 29, is to add the level in the building as a distinct level in the RD. It should still be placed between the last construction entity (two-letter code) level and the first space of installation (three-letter code) level.

EXAMPLE ++L1.LA1.LA1.2.DAC1

Although this choice provides an easy distinction of the level, it does require all digital applications to accept the use of the separating character (“.” or “++”). The floor shall remain a distinct level, and not an additional digit in the parent-level numbering (e.g. A1CA11CAB1).

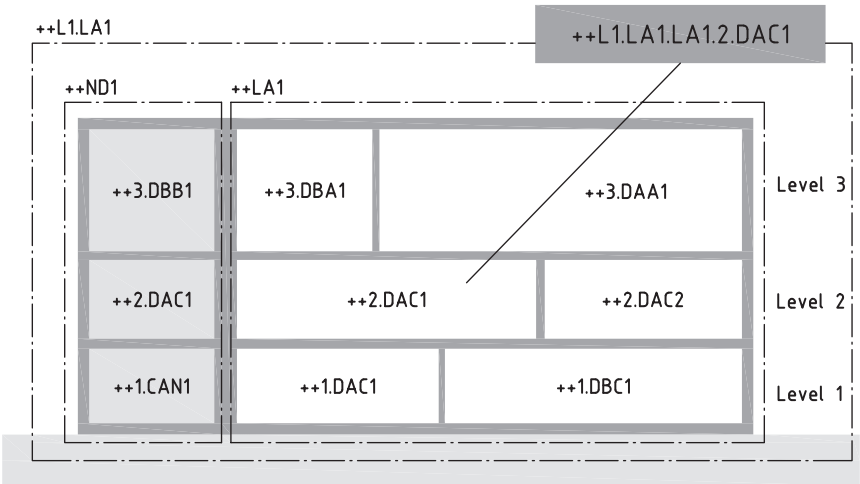

Key

++L1.LA1	power plant
++L1.LA1.ND1	power plant, workshop
++L1.LA1.LA1	power plant, power plant

Figure 29 — Second principle for level numbering in the RDS location aspect — Stand-alone level

7.6.2.4 Space numbering including level

The solution following ISO 4157-2, illustrated in Figure 30 is to add the level into the instantiating number of the different spaces.

EXAMPLE ++A1.CA1.CAB**1**01

This standardized method is generally applied on hotel/building room numbering and should feel familiar (see ISO 4157-2). The major flaw of this is meaningful numbering.

© ISO 2025 – All rights reserved

Documents
Document Sharing Hub
Full document details: PD ISO/TS 81346-101:2025

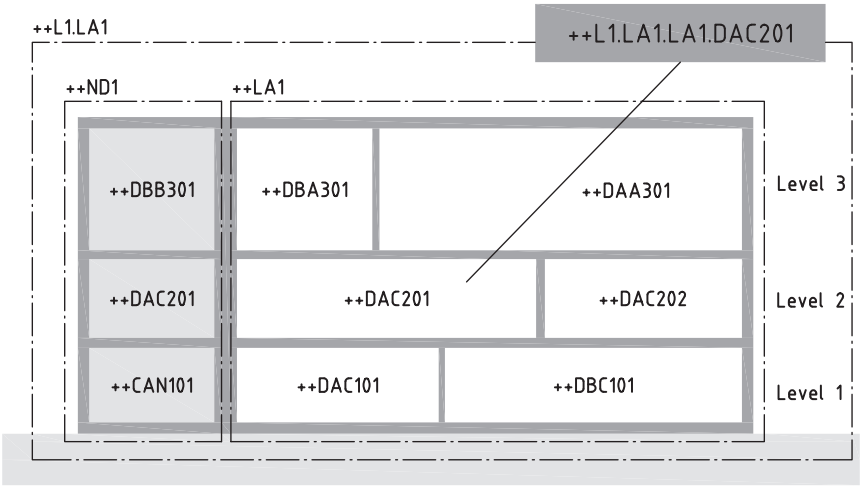

Key

++L1.LA1	power plant
++L1.LA1.ND1	power plant, workshop
++L1.LA1.LA1	power plant, power plant

Figure 30 — Third principle for level numbering in the RDS location aspect — Space numbering including level

Level 1 is defined as the lowest level in a construction entity where activities can be performed (including below ground level). This means that while there can be negative floor numbering (subterranean floors), there can never be negative levels. Buried objects such as pipes or cables can be considered placed on Level 0.

7.6.3 Syntax

In many situations a location RD will point to a space/system containing multiple objects of interest, e.g. it will point to the room where a list of functions is located, each of which share the same location RD. This location RD is *ambiguous* to these objects, as it does not identify each of the systems within. The RD will unambiguously identify the space containing them all.

The location aspect RD of an object will usually identify a parent level to the object of interest (e.g. the room where a cabinet is located, not the space that the cabinet represents). In accordance with IEC 81346-1, such a reference designation shall end the space/host system designation with a horizontal ellipsis ("…"), see the following example RD-set:

EXAMPLE

=A1.XXX1

++A1.AAA12…

Because the location aspect is most often used in this manner (no confusion is likely), the ellipsis may be omitted for this aspect (see IEC 81346-1:2022, Rule 32).

7.7 Location-type aspect [%%]

The site of installation aspect classes is different from the other aspects. While the regular (%) type aspect is employed for types of Power supply Systems, the location-type aspect is reserved for types of construction complexes, construction entities and activity spaces as defined by the tables used by the site of installation aspect. As illustrated in Figure 31 and Table 5, the location-type refers to the site of installation aspect classes (construction complex, construction entity and installation space). This can be useful to indicate zones with particular requirements or HSE hazard, such as a high voltage area indicated by the yellow triangle in Figure 31.

© ISO 2025 – All rights reserved

Documents
Document Sharing Hub
Full document details: PD ISO/TS 81346-101:2025

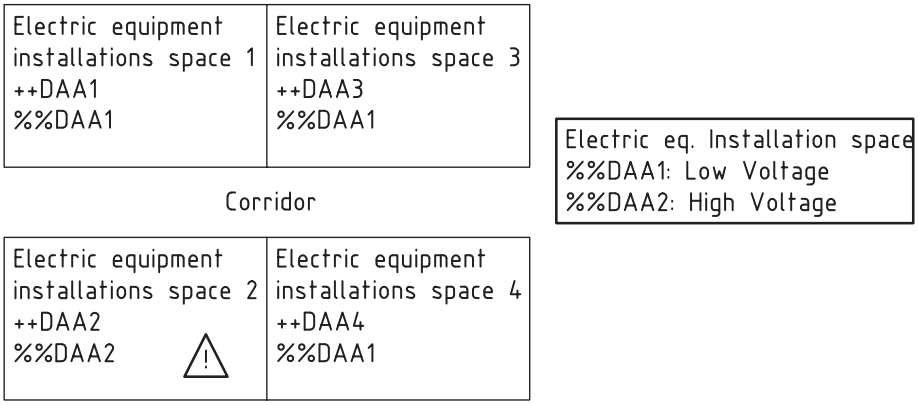

Figure 31 — Location-type aspect example

Table 5 — Type and location-type applications

Type (%)			**Location-Type** (%%)		
A	Prime systems	%A1 Hydropower plant	A	Construction complex	%A1 Apartment residential area
AA	Functional systems	%HB1 Liquid supply system (Oil)	AA	Construction entity	%HG1 Ball sport facility (Tennis)
AAA	Component systems	%WPA1 Water pipe	AAA	Space	%CAE1 Fluid storage space (Water)

All other principles for the type aspect (see 7.3) are valid and useable for the location-type aspect as well.

8 System associations and relationship classification

8.1 Implicit association of the hierarchical structure

An RD-based hierarchical structure is created by classifying its constituent systems and defining part-of relationships between them.

EXAMPLE -D1-JB2-WPA3 is the reference designation of a pipe, part of a water distribution system (-D1-JB2), part of an auxiliary system (-D1).

“Sibling” relationships between systems (multiple systems part of the same larger system) is another relationship type implicitly derived from the hierarchical structure.

These are the most basic of association principles, implicitly given by the object reference designations themselves. In 8.2, 8.3 and 8.4 explicit relationships between systems are discussed.

8.2 RD-set

One of the primary benefits of the RD-sets is that they enable the linking of information about a certain system throughout different domains and IT systems.

Within a company, different IT-tools/software/systems will base their information structures on one of the RDS aspects (e.g. map-based systems will most likely be based on the location aspect structures, while automation processes will be built on the functional aspect). Other types of information about the object of interest can be found on other platforms. Because of the RD-set of the object in question, it can be located on any platform, even those based on another aspect.

© ISO 2025 – All rights reserved

Documents
Document Sharing Hub
Full document details: PD ISO/TS 81346-101:2025

Figure 32 gives an example for using the RDS to navigate a Geographic Information System (GIS) and locating a certain space (a valve chamber); the GIS database can reveal all systems with that particular location occurrence (i.e. the available list of systems in that location). Once a system among them is selected (e.g. the inlet pressure monitoring system) the RD in another aspect (-A1.RB1.BPA1 in Figure 32) will link to, e.g. the system documentation, stored in the digital archives, organized using the product aspect.

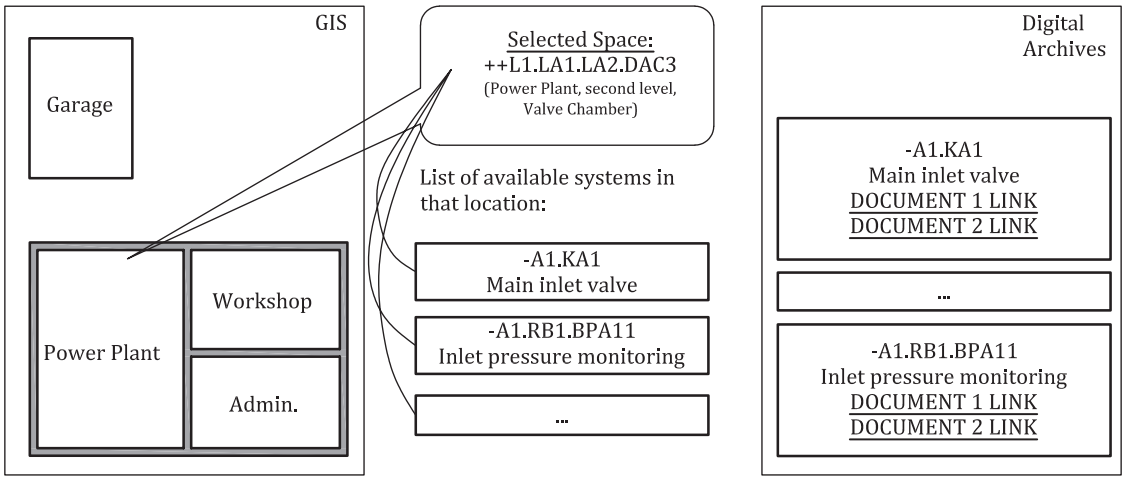

Figure 32 — Navigating between systems (geographic information system and digital archives) using RD-set

A requirement for object recognition over IT systems is the possibility to associate/attach information about the other RDs to the object of interest (usually as attributes/metadata).

8.3 Relationship classification

IEC 81346-1:2022, Annex I specifies a method to designate and classify the relationship between object occurrences. It allows relationships between different objects to be established and classified.

The relationship is identified by inserting the relationship class between the two occurrence RDs, separated by the "|"-character on both sides, such as in the example below.

Some few relationship classes are provided as examples in IEC 81346-1.

EXAMPLE Relationship where matter flows between two systems in liquid form, between the main inlet valve and the turbine (receiving system is on the right side of the relationship class): =A1.KA1|DB|=A1.RB1.

In Figure 33 an auxiliary oil supply system (<Odin.PS1>=D3.HB1) has its own dedicated power supply system (<Odin.PS1>=D3.HB1.HD1).

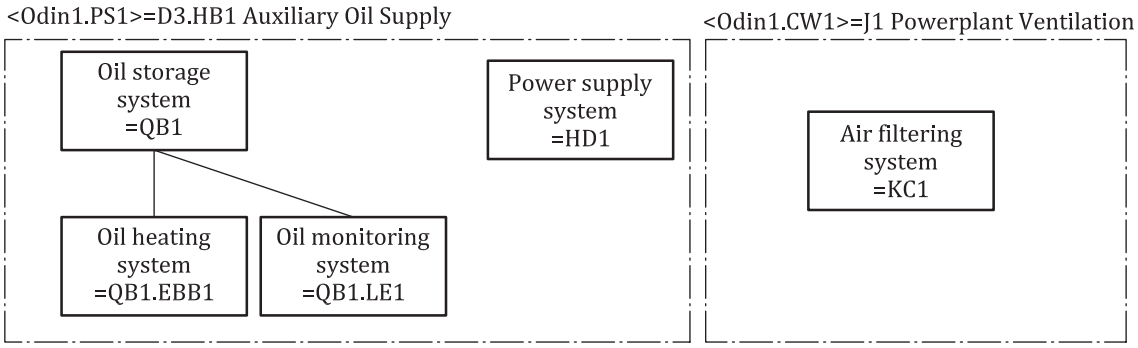

Figure 33 — Example of use of the association classification on a system — System description

The relationship within the oil supply system can be classified as such:

© ISO 2025 – All rights reserved

Documents
Document Sharing Hub
Full document details: PD ISO/TS 81346-101:2025

=D3.HB1.HD1|CA|=D3.HB1.QB1.EBB1

The power supply system |supplies power to| the oil heating system

or

=D3.HB1.HD1|CA|=D3.HB1.QB1.LE1

The power supply system |supplies power to| the oil monitoring system

As an HSE action, the power plant ventilation system (<Odin.CW1>=J1) was equipped with an air filtering system. For convenience, power to the filtering system is supplied by the auxiliary oil supply system power supply (<Odin.PS1>=D3.HB1.HD1):

<Odin.PS1>=D3.HB1.HD1|CA|<Odin.CW1>=J1.KC1

The auxiliary oil supply power supply system |supplies power to| the ventilation system

With this information stored and made available, HSE and root cause analysis can be helped by the classification of the system dependencies. As an example, a user would in the case above be made aware that precautions should be taken because maintenance tasks involving the auxiliary oils supply system and its power supply, can impact the air in the power plant.

8.4 Relationships between aspects

One object individual can be represented uniformly in the different aspects.

There will be cases where an object individual, as referred to unambiguously in the product aspect (e.g. a sensor), can in fact perform multiple functions. In which case, each of these functions exist, and can be identified by their reference designations in the functional aspect.

EXAMPLE

RD-set 1

-D1.LE1.BTA4	auxiliary system 1, monitoring system 1, temperature sensor 4
=D1.PF1.BTA3	auxiliary system 1, protection system 1, temperature sensor 3

RD-set 2

-D1.LE1.BTA4	auxiliary system 1, monitoring system 1, temperature sensor 4
=D1.HE1.BTA2	auxiliary system 1, cooling system 1, temperature sensor 2

In the example above, the same sensor (-D1.LE1.BTA4) fulfils two functions (=D1.PF1.BTA3 and =D1.HE1.BTA2). There is a one-to-many relationship between these occurrences.

There will be occasions where the situation is reversed, and many objects (with individual product occurrences) fulfil one single function. Such a situation can be found in a stretch of pipes, where the full stretch is modelled as e.g. =D1.JB1, while every single pipe segment can be individually identified in the product aspect (-D1.WPA1, -D1.WPA2, etc.).

An equivalent one-to-many relationship will exist regarding the location aspects as well, as some objects are large enough to exist in multiple defined spaces at the same time (e.g. cables stretching over multiple rooms in a building).

In any given system where these one-to-many relationships exist, the one is the unambiguous reference designation of the object in question (i.e. that points specifically to the object in question, and only that object).

© ISO 2025 – All rights reserved

Documents
Document Sharing Hub
Full document details: PD ISO/TS 81346-101:2025

9 Classification guidelines — Power supply systems

9.1 Prime systems (main systems)

9.1.1 General

Prime systems, formerly known as "power supply systems", are reference designations of the highest level of abstraction. Prime system classes are represented by one-letter codes.

The classes discussed in 9.1.2, 9.1.3 and 9.1.4 can be found in ISO 81346-10:2022, Table B.1.

9.1.2 Electric power transporting systems (B-systems)

B-systems are difficult to model in a uniformed manner because of their great variety. The following rules of thumb can help users to model systems in a homogenous way:

— The separating system between electrical systems is often a circuit breaker (CB). If in doubt, the ownership of the separating/connecting system is given by the receiver's ownership principle (see 5.2) or the collector system principle (see 5.3).

— A power distribution system collecting power from the process and submitting it to the grid should be modelled as B-system. A power distribution system submitting power for internal or secondary purposes (notably local power supply) should generally be modelled as a D-system.

9.1.3 Supporting systems (D-systems)

Systems supporting the main process, in particular systems that potentially support several units at once should be modelled as D-systems.

The following is a list of some of the proposed systems classified as support systems:

— Multi-purpose hydraulics oil supply systems;

— Main cooling water supply systems (hydro);

— Auxiliary power supply system.

Many auxiliary systems would naturally fit in the construction works structure (see Clause 10), they would therefore not figure as D-systems within the power supply hierarchy. Examples of these are:

— building ventilation systems;

— building heating/cooling systems;

— access control systems;

— general firefighting systems;

— local alarm systems (sound/light).

Some systems, such as station power self-supply systems or earthing systems, can exist in both domains. This is allowed and supported if required (see 5.10).

9.1.4 Managing systems (F-systems)

Power supply systems are complex and hold a great many sub-systems that require some sort of control system. A control system can be considered a part of the object of interest itself (e.g. the manual control system of a motorized crane) or it can be a dedicated external system (e.g. a plant management automation system).

© ISO 2025 – All rights reserved

Documents
Document Sharing Hub
Full document details: PD ISO/TS 81346-101:2025

The following are proposed guidelines for determining what systems should or should not be part of dedicated F-systems:

— If a control system Alpha is solely dedicated to a single system Beta, then the control system Alpha is part of system Beta. This situation will often apply to local control systems.

— If a control system Alpha is dedicated to multiple (functionally) dispersed systems, it should probably be considered as an F-system, or a part thereof. This situation will often apply to remote control and overall plant automation systems.

— If a system is dedicated to, or supports general information flow, it can be considered part of an F-system, e.g. signal transmission systems.

— If a cubicle/rack/equipment housing system holds information handling equipment dedicated to multiple functionally dispersed systems, it should be considered part of an F-system.

Especially within these F-systems, there will likely exist functions that are, at least partly, performed by non-physical devices (software), such as IT networks.

9.2 Technical systems

9.2.1 General

Technical systems can be found in ISO 81346-10:2022, Table B.2.

9.2.2 Consecutive duplicated classes

The RDS hierarchies are created by structuring systems within systems. Any given system has an essence to its functionality that leads to the selection of its classification: A gate in a waterway controls the flow of water, it is a KA technical system.

Some systems can be complex, with many sub-systems reflecting that complexity (see 5.1). In such a situation it can be desired to designate the part of a larger system that incorporates the essence of the parent system functionality. In these cases, it is natural to find a reference designation with a duplicated class.

EXAMPLE 1 A gate system =KA1 can be a complex system with multiple gates such as in Figure 34. It is essential for the control system to be able to reference each individual gate within the larger gate system (=KA1.KA1 and =KA1.KA2), as exemplified in Figure 35.

© ISO 2025 – All rights reserved

Documents
Document Sharing Hub
Full document details: PD ISO/TS 81346-101:2025

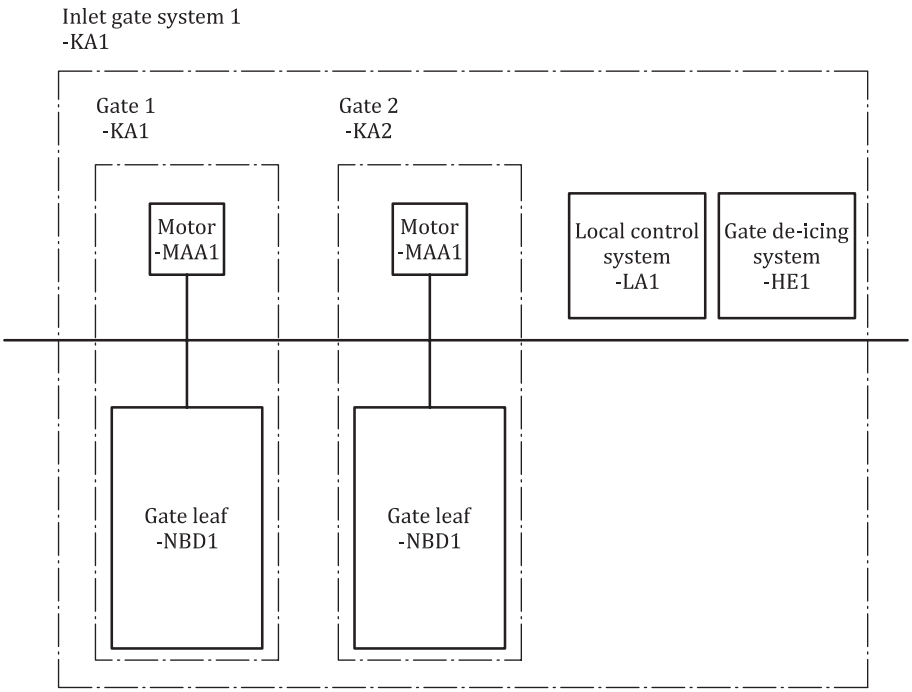

Figure 34 — Gate system example

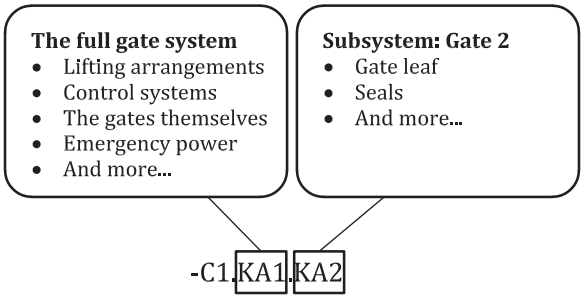

Figure 35 — Gate system example details

Duplicated classes can also be used to group large quantities of similar systems.

EXAMPLE 2 For a long and complex oil distribution system, there can be hundreds of pipe sections attached in a complicated network. It is sensible to group sections of pipes into meaningful systems:

[…]-JB1 Oil distribution system

-JB1.WPA1 Pipe system leading oil to customer systems on first floor

-JB1.WPA1.WPA1 Pipe section 1

-JB1.WPA1.WPA2 Pipe section 2

-JB1.WPA1.WPAn Pipe section n

-JB1.WPA2 Pipe system leading oil to customer systems on second floor

-JB1.WPA2.WPA1 Pipe section 1

-JB1.WPA2.WPA2 Pipe section 2

© ISO 2025 – All rights reserved

Documents
Document Sharing Hub
Full document details: PD ISO/TS 81346-101:2025

-JB1.WPA2.WPAn Pipe section n

…

9.2.3 AA-AE Structural support classes

For PS, the functional aspect is proposed to be used primarily for process related tasks (signals, automation, process control). Because of the mechanical nature of the AA-AE structural classes, they can not figure in the functional aspect model at all.

There are however some exceptions. Notable among these are dams. It is proposed to model dams, and the dam sub-systems using the following classes:

— AE: Dam;

— AA: Dam Structure;

— AB: Dam Foundation.

9.2.4 Pumping systems (KE) or Liquid matter transport systems (JB)

Pumping systems (KE) are treatment systems, they increase pressure. The overall purpose of the increased pressure is often used to lift/transport matter; when that is the case, it is recommended to model a liquid matter transportation system (JB) to model the overall system function, and then add the pump as a sub-function to it.

Figure 36 provides an example.

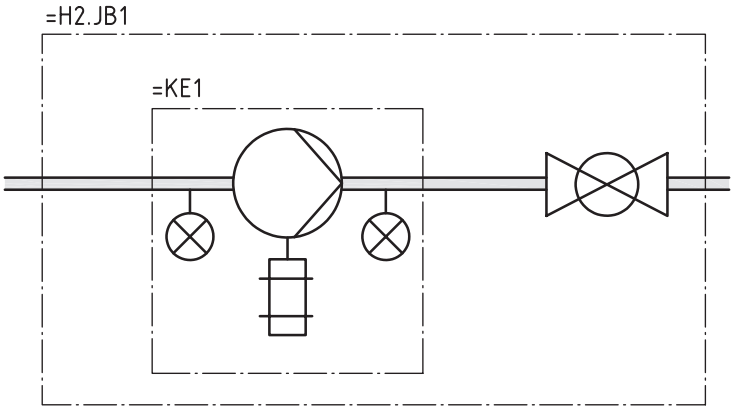

Key

=H2.JB1	drain water ejection (transport) system
=H2.JB1.KE1	pump system

Figure 36 — Pump system =H2.JB1.KE1 within a liquid transport system =H2.JB1

9.2.5 Electrical power supply (HD) or electrical energy storage system (QD)

Electrical power supply (HD) or electrical energy storage system (QD) can both be applied to battery system.

The selection of class shall come from the primary intended use:

— If the system's goal is to supply energy in need (blackouts/start-up), it is a power supply system (HD). See Figure 37.

— If the system was installed to be a temporary recipient of energy for subsequent retrieval and use (e.g. a lithium-based battery system installed to store surplus energy from a wind power farm), it is a storage system, i.e. a QD system.

© ISO 2025 – All rights reserved

Documents
Document Sharing Hub
Full document details: PD ISO/TS 81346-101:2025