PD ISO/TS 81346-3:2012

BSI Standards Publication

Industrial systems, installations and equipment and industrial products — Structuring principles and reference designations

Part 3: Application rules for a reference designation system

bsi.

...making excellence a habit.™

Document Sharing Hub

National foreword

This Published Document is the UK implementation of ISO/TS 81346-3:2012. It supersedes DD ISO/TS 16952-1:2007 which is withdrawn.

The UK participation in its preparation was entrusted to Technical Committee TDW/4, Technical Product Realization.

A list of organizations represented on this committee can be obtained on request to its secretary.

This publication does not purport to include all the necessary provisions of a contract. Users are responsible for its correct application.

© The British Standards Institution 2012

Published by BSI Standards Limited 2012

ISBN 978 0 580 76313 7

ICS 01.110

Compliance with a British Standard cannot confer immunity from legal obligations.

This Published Document was published under the authority of the Standards Policy and Strategy Committee on 31 July 2012.

Amendments issued since publication

Amd. No.	Date	Text affected

Documents
Document Sharing Hub

Full document details: PD ISO/TS 81346-3:2012

TECHNICAL SPECIFICATION

ISO/TS 81346-3

First edition
2012-07-15

Industrial systems, installations and equipment and industrial products — Structuring principles and reference designations —

Part 3: Application rules for a reference designation system

Systèmes industriels, installations et appareils, et produits industriels — Principes de structuration et désignations de référence —

Partie 3: Règles d'application pour un système de désignation de référence

Reference number
ISO/TS 81346-3:2012(E)

Documents
Document Sharing Hub

© ISO 2012

Full document details: PD ISO/TS 81346-3:2012

COPYRIGHT PROTECTED DOCUMENT

© ISO 2012

All rights reserved. Unless otherwise specified, no part of this publication may be reproduced or utilized in any form or by any means, electronic or mechanical, including photocopying and microfilm, without permission in writing from either ISO at the address below or ISO's member body in the country of the requester.

ISO copyright office
Case postale 56 • CH-1211 Geneva 20
Tel. + 41 22 749 01 11
Fax + 41 22 749 09 47
E-mail copyright@iso.org
Web www.iso.org

Published in Switzerland

Documents
Document Sharing Hub
© ISO 2012 – All rights reserved

Full document details: PD ISO/TS 81346-3:2012

Contents

Page

Foreword iv
Introduction v
1 Scope 1
2 Normative references 1
3 Terms and definitions 2
4 Designation systematics 5
4.1 General 5
4.2 Designation process 6
5 Tasks of designation 7
5.1 General 7
5.2 Conjoint designation 7
5.3 Designation of technical objects 8
5.4 Designation of other objects 12
6 Construction of designation 13
6.1 Syntax overview 13
6.2 Conjoint designation 14
6.3 Reference designation 14
6.4 Specific designation 16
Annex A (informative) **Designation process within a project** 18
Annex B (informative) **Application examples** 30
Annex C (informative) **Other helpful terms and definitions for a “designation system”** 34
Bibliography 48

© ISO 2012 – All rights reserved

Documents
Document Sharing Hub
Full document details: PD ISO/TS 81346-3:2012

Foreword

ISO (the International Organization for Standardization) is a worldwide federation of national standards bodies (ISO member bodies). The work of preparing International Standards is normally carried out through ISO technical committees. Each member body interested in a subject for which a technical committee has been established has the right to be represented on that committee. International organizations, governmental and non-governmental, in liaison with ISO, also take part in the work. ISO collaborates closely with the International Electrotechnical Commission (IEC) on all matters of electrotechnical standardization.

International Standards are drafted in accordance with the rules given in the ISO/IEC Directives, Part 2.

The main task of technical committees is to prepare International Standards. Draft International Standards adopted by the technical committees are circulated to the member bodies for voting. Publication as an International Standard requires approval by at least 75 % of the member bodies casting a vote.

In other circumstances, particularly when there is an urgent market requirement for such documents, a technical committee may decide to publish other types of document:

— an ISO Publicly Available Specification (ISO/PAS) represents an agreement between technical experts in an ISO working group and is accepted for publication if it is approved by more than 50 % of the members of the parent committee casting a vote;

— an ISO Technical Specification (ISO/TS) represents an agreement between the members of a technical committee and is accepted for publication if it is approved by 2/3 of the members of the committee casting a vote.

An ISO/PAS or ISO/TS is reviewed after three years in order to decide whether it will be confirmed for a further three years, revised to become an International Standard, or withdrawn. If the ISO/PAS or ISO/TS is confirmed, it is reviewed again after a further three years, at which time it must either be transformed into an International Standard or be withdrawn.

Attention is drawn to the possibility that some of the elements of this document may be the subject of patent rights. ISO shall not be held responsible for identifying any or all such patent rights.

ISO/TS 81346-3 was prepared by Technical Committee ISO/TC 10, *Technical product documentation*, Subcommittee SC 10, *Process plant documentation*.

ISO/TS 81346-3 cancels and replaces ISO/TS 16952-1:2006 which has been editorially revised for integration in the ISO 81346 and IEC 81346 series.

Documents in the 80000 to 89999 range of reference numbers are developed by collaboration between ISO and IEC.

ISO 81346 consists of the following parts, under the general title *Industrial systems, installations and equipment and industrial products — Structuring principles and reference designations*:

— *Part 3: Application rules for a reference designation system* [Technical Specification]

IEC 81346 consists of the following parts, under the general title *Industrial systems, installations and equipment and industrial products — Structuring principles and reference designations*:

— *Part 1: Basic rules*

— *Part 2: Classification of objects and codes for classes*

Further parts on sector-specific rules are under consideration.

Documents
Document Sharing Hub

© ISO 2012 – All rights reserved

Full document details: PD ISO/TS 81346-3:2012

Introduction

This International Standard is the basic standard for structuring principles and reference designation. IEC 81346-1 provides a number of possibilities for the construction of reference designations. For most applications, however, only a subset of the possibilities given in IEC 81346-1 needs to be used. IEC 81346-1 does not restrict the use of the reference designation system to a specific area. It is sometimes necessary to incorporate further basic requirements, and it is recommended that these be specified and explained in supporting documentation.

To enhance an efficient implementation of those basic rules and to ensure a consistent interpretation of those rules, an easily understandable system is necessary. Consequently, ISO/TS 81346-3:

— offers broadly based, general solutions with rules for a practice-oriented and consistent application;

— fulfils the requirements for ergonomics and occupational safety;

— takes into account memorability, labelling, and processing in common office- and CAx-tools;

— summarizes in a single document all technical designation tasks (reference designations according to function, product and location aspect as well as designation of connections, signals, documents);

— recommends decoupling of reference designation activities of plant designers and of equipment suppliers, by use and allocation of different aspects;

— introduces the “conjoint designation” for higher level objects without specific aspect;

— supports the handling of computer programs and parts of such programs as technical products;

— forms the basis for sector-specific solutions and specifications in further parts, in order to achieve a consistent designation across different technical fields.

© ISO 2012 – All rights reserved

Documents
Document Sharing Hub
Full document details: PD ISO/TS 81346-3:2012

Industrial systems, installations and equipment and industrial products — Structuring principles and reference designations —

Part 3:
Application rules for a reference designation system

1 Scope

This part of ISO 81346 establishes comprehensive and practice-oriented principles and rules for the designation of technical objects within a system, as well as for the designation of connections, signals and documents in accordance with the corresponding basic standards.

The principles of this part of ISO 81346 apply to all technical fields for all industries and can be applied in all phases of the life cycle of a technical object.

The designation of types, individuals, cost-centres, projects, etc. is not covered by this part of ISO 81346.

2 Normative references

The following referenced documents are indispensable for the application of this document. For dated references, only the edition cited applies. For undated references, the latest edition of the referenced document (including any amendments) applies.

ISO 9355-1, *Ergonomic requirements for the design of displays and control actuators — Part 1: Human interactions with displays and control actuators*

ISO 9355-2, *Ergonomic requirements for the design of displays and control actuators — Part 2: Displays*

ISO 12100, *Safety of machinery — General principles for design — Risk assessment and risk reduction*

IEC 61175, *Industrial systems, installations and equipment and industrial products — Designation of signals*

IEC 61355-1, *Classification and designation of documents for plants, systems and equipment — Rules and classification tables*

IEC 61666, *Industrial systems, installations and equipment and industrial products — Identification of terminals within a system*

IEC 81346-1:2009, *Industrial systems, installations and equipment and industrial products — Structuring principles and reference designations — Part 1: Basic rules*

IEC 81346-2:2009, *Industrial systems, installations and equipment and industrial products — Structuring principles and reference designations — Part 2: Classification of objects and codes for classes*

© ISO 2012 – All rights reserved

Documents
Document Sharing Hub
Full document details: PD ISO/TS 81346-3:2012

3 Terms and definitions

For the purposes of this document, the following terms and definitions apply.

3.1
aspect
specific way of viewing an object

[IEC 81346-1:2009]

3.2
building
construction works that has the provision of shelter for its occupants or contents as one of its main purposes, and which is usually partially or totally enclosed and designed to stand permanently in one place

[ISO 6707-1:2004]

3.3
designation
generation of task-specific reference designations for technical objects in accordance with fixed rules

3.4
document
information on a data medium

NOTE 1 Normally a document is designated in accordance with the type of information and the form of presentation, for example overview diagram, connection table, function chart.

NOTE 2 Information can appear in static manner on paper and microform, or dynamically on (video) display devices.

[IEC 61082-1:2006]

3.5
document kind
type of document defined with respect to its specified content of information and form of presentation

NOTE Sometimes the term document type is used for the same concept.

[IEC 61355-1:2008]

3.6
document kind class
group of document kinds having similar characteristics concerning the content of information independent of the form of presentation

[IEC 61355-1:2008]

3.7
documentation
collection of documents assigned to a specific object

NOTE This can include technical, commercial and/or other documents.

[IEC 61082-1:2006]

3.8
function
intended or accomplished purpose or task

[IEC 81346-1:2009]

© ISO 2012 – All rights reserved
Documents
Document Sharing Hub
Full document details: PD ISO/TS 81346-3:2012

3.9
infrastructure
system of facilities, equipment and services required for the operation of an organization

[ISO 9000:2005]

3.10
multi-level reference designation
reference designation consisting of concatenated single-level reference designations

[IEC 81346-1:2009]

3.11
object
entity treated in a process of development, implementation, usage and disposal

NOTE 1 The object may refer to a physical or non-physical “thing”, i.e. anything that might exist, exists or did exist.

NOTE 2 The object has information associated to it.

[IEC 81346-1:2009]

3.12
plant
complete set of technical equipment and facilities for solving a defined technical task

NOTE A plant includes apparatus, machines, instruments, devices, means of transportation, control equipment and other operating equipment.

[IEC 60050-351:2006]

3.13
process
sequence of chemical, physical or biological operations for the conversion, transport or storage of material or energy

[ISO 10628:1997]

NOTE 1 Different processes or process steps can be carried out in the same process plant or plant section at different times.

NOTE 2 A process can also be regarded as an entirety of interacting events in a system through which material, energy or information are transformed, transported or stored.

3.14
product
intended or accomplished result of labour, or of a natural or artificial process

[IEC 81346-1:2009]

3.15
reference designation
identifier of a specific object formed with respect to the system of which the object is a constituent, based on one or more aspects of that system

[IEC 81346-1:2009]

© ISO 2012 – All rights reserved

Documents
Document Sharing Hub
Full document details: PD ISO/TS 81346-3:2012

3.16
signal
unit of information conveyed from one object to another

NOTE Messages (units of signals) may be sent in a communication network in the form of telegrams. Such messages may represent one or several signals.

[IEC 61175:2005]

3.17
single-level reference designation
reference designation assigned with respect to the object of which the specific object is a direct constituent in one aspect

NOTE A single-level reference designation does not include any reference designations of upper level or lower level objects.

[IEC 81346-1:2009]

3.18
structure
relations among the elements of a system

[IEC 60050-351:2006]

3.19
system
set of interrelated objects considered in a defined context as a whole and separated from their environment

NOTE 1 A system is generally defined with the view of achieving a given objective, e.g. by performing a definite function.

NOTE 2 Elements of a system may be natural or man-made material objects, as well as modes of thinking and the results thereof (e.g. form of organisation, mathematical methods, programming languages).

NOTE 3 The system is considered to be separated from the environment and from the other external systems by an imaginary surface, which cuts the links between them and the system.

NOTE 4 The term "system" should be qualified when it is not clear from the context to what it refers, e.g. control system, colorimetric system, system of units, transmission system.

NOTE 5 When a system is part of another system, it may be considered as an object as defined in this standard.

[IEC 81346-1:2009]

3.20
terminal
point of access to an object intended for connection to an external network

NOTE 1 The connection may refer to:

— a physical interface between conductors and/or contacts, or piping and/or duct systems to provide a signal, energy or material flow path;

— an association of functional nature established between logical elements, software modules, etc. for conveying information.

NOTE 2 The external networks may be of different nature and accordingly they may be classified. IEC 81714-3 provides such classifications.

[IEC 61666:2010]

© ISO 2012 – All rights reserved
Documents
Document Sharing Hub
Full document details: PD ISO/TS 81346-3:2012

4 Designation systematics

4.1 General

4.1.1 Designation systematics is a well-ordered and methodical process of forming designations on the basis of simple rules, ensuring compliance with the following requirements:

a) consistency in all phases (e.g. engineering, operation and decommissioning) and engineering disciplines (e.g. process, civil, mechanical and electrical engineering) of a project;

b) fulfilment of ergonomic principles in accordance with ISO 12100, ISO 9355-1 and ISO 9355-2, with regard to occupational health and safety (hazard analysis, fault tracing, job orders, equipment release procedures, etc.), e.g.

   — simple structure of designation,

   — easy-to-remember representation,

   — clear legibility and easy memorability,

   — error-free interpretation;

c) improvement of information management and information quality control, e.g. by establishing:

   — identifiers for data and document management systems,

   — identifiers for configuration and quality management systems,

   — clear cross-references between physical application and documentation.

The designation shall clearly and unambiguously identify all objects and associated information according to their function, implementation and location.

The designation shall describe the real structure of an object and its relations to other objects.

The designation of the parts of a system shall be generic to such an extent that the system can be incorporated in any other system, without the need for changing the reference designations in any of the systems involved.

4.1.2 IEC 81346-1 provides a number of possibilities for the construction of reference designation. For most applications, however, only a subset of the possibilities given in IEC 81346-1 needs to be used. For a consistent application in practice, this part of ISO 81346 establishes clear and easily understandable rules and guidelines as well as well-defined specifications for the following:

— tasks of designation (see Clause 5);

— general and sector neutral construction of designation (see Clause 6).

4.1.3 This part of ISO 81346 stipulates only basic rules. Detailed and specific requirements are given in the sector-specific parts, in order to cover the specific needs of different application fields. These specific requirements comprise:

— a relevant subset of designation possibilities;

— letter codes for infrastructure objects;

— a reference designation that identifies the object unambiguously (main aspect);

© ISO 2012 – All rights reserved

Documents
Document Sharing Hub
Full document details: PD ISO/TS 81346-3:2012

— transitions between different aspects;

— a sector-specific designation structure;

— the allocation of structural levels to letter code tables;

— additional aspects.

4.1.4 Furthermore, the following specifications need to be established and documented for each project:

— conjoint allocation;

— notation, e.g. in documents, on labels, on displays.

4.1.5 The chosen structure, with corresponding reference designations, shall be documented not only in relevant object describing documents, but also in a separate document describing the structure.

For a specific project, the general rules shall be listed at the start of the designation process and documented complete with specific requirements in separate instructions.

4.1.6 An example of a designation process within a project is given in Annex A. Application examples are given in Annex B. Other terms and definitions that are used in the context of a “designation system” and will be helpful for the elaboration of sector-specific parts of this International Standard are given in Annex C.

4.2 Designation process

The designation process comprises the following sub-processes.

Starting from process flow diagrams, overview diagrams, site plans, etc. used to describe the structure of the overall project in accordance with IEC 81346-1, the overall object shall be broken down according to different viewpoints. For instance, a location with industrial facilities can be divided into specific areas (e.g. manufacture, power plant). These objects shall be defined as top-level nodes of the overall structure and shall serve as starting point for subdivisions into lower-level aspect-oriented structures (see 5.3.1).

At an early stage in the planning, the task-oriented representations of the object of interest shall be translated into a hierarchical tree-like structure under a functional aspect. In subsequent phases, the products that fulfil the tasks of the partial objects viewed under functional aspects shall be defined and structured. To designate the location of the products, the overall object shall be structured under the location aspect. Structuring shall be performed in compliance with the principle of constituency, i.e. an object is a constituent of a single higher object, but can comprise several sub-objects (hierarchical structural model). The subdividing process is completed with the smallest object of interest for the defined purpose.

Partial objects shall be defined and classified during the structuring process. To classify partial objects, it is possible to use IEC 81346-2:2009, Table 1, for non aspect-specific purposes and/or sector- or project-specific letter code tables structured in accordance with IEC 81346-2:2009, Table 2. In cases where both methods are used, the allocations of the structural level to the corresponding letter code level shall be defined. The parts of an object shall be classified in accordance with their location in the structure (structural level), as specified by the agreed tables.

The prefix for the aspect, the letter code of the object class and an additional number form the single-level reference designation. The number is used to distinguish between objects belonging to the same class and to the same overall object. The multi-level reference designation is created by concatenating the single-level reference designations represented in the path beginning with the top-most one.

To establish a unique designation, it is necessary to create task-specific designation combinations (in relation to technical objects, signals, connections, documents), as described in Clause 6.

The designation shall be used for labelling technical objects in the plant, for designating documents and for identifying the representation of objects in documents.

© ISO 2012 – All rights reserved
Documents
Document Sharing Hub
Full document details: PD ISO/TS 81346-3:2012

Reference designations with different aspects can be used in databases to network object information in different records ("pragmatic relations"). This yields a large number of task-related evaluation options, e.g. information about the location of products performing a function and which are reported as defective.

Figure 1 shows the schematic representation of the designation process.

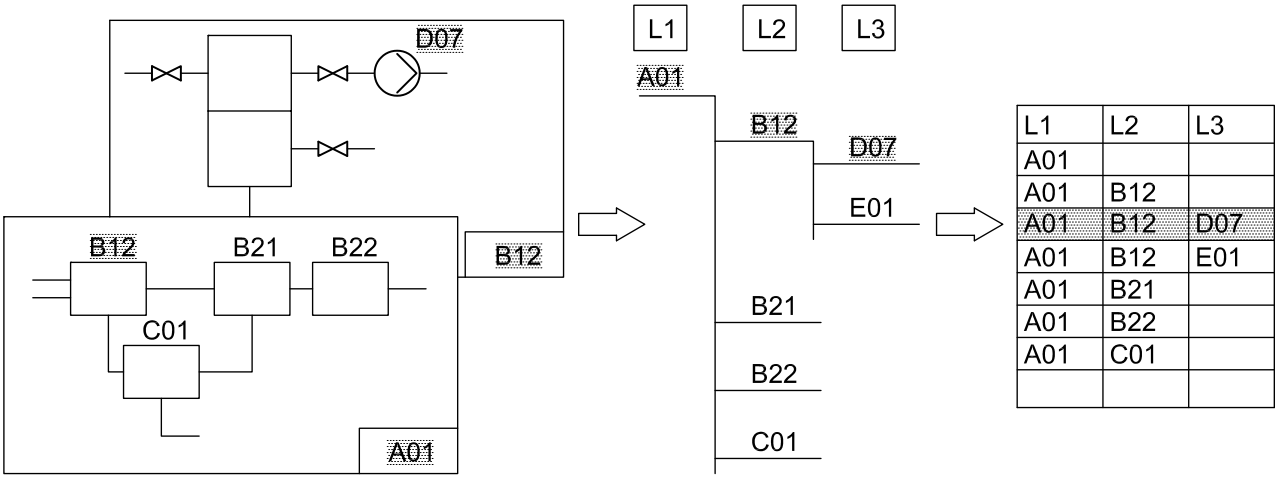

Figure 1 — Schematic representation of the designation process

5 Tasks of designation

5.1 General

A reference designation shall

— identify an object,

— provide information regarding the class to which the object belongs, and

— provide information on where the object is located within a structure.

5.2 Conjoint designation

It is recognized that on a site different plants may exist. In order to address these plants with respect to the site, it may be necessary to apply a conjoint designation. A conjoint designation is a reference designation of a plant/system with respect to the site, which is not related to one of the defined aspects.

NOTE In IEC 81346-1, the aspect type "other aspect" (for aspects see 5.3.1.1) is introduced together with the prefix sign "#". Conjoint designation is considered as one of the "other aspect" types.

The use of the conjoint designation is optional. The application, structure and number of data characters shall be defined project-specifically.

If this designation is used as part of the identifier (see 6.1), the systems, objects and products which fulfil the same task in different plants can have the same reference designation. Unambiguous designations are obtained by means of the different conjoint designations. There is a significant ergonomic advantage in adopting this approach. Even if the equipment is moved from plant to plant, the necessary changes of its designation are limited. The same principle applies to designations of locations.

© ISO 2012 – All rights reserved

Documents
Document Sharing Hub
Full document details: PD ISO/TS 81346-3:2012

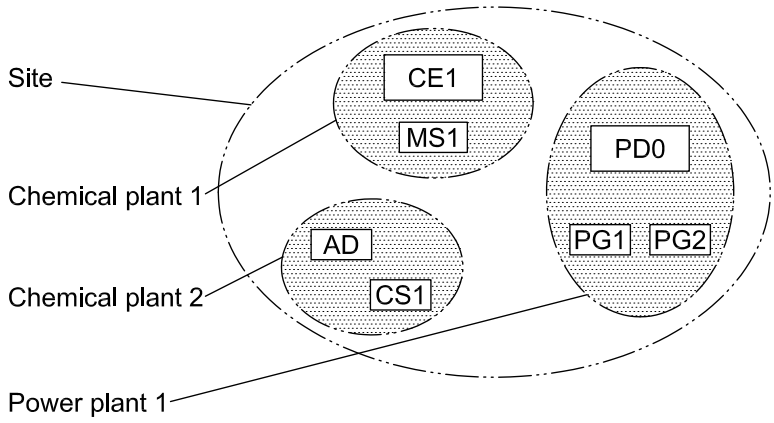

Designation	Description
#CP1	Chemical plant 1
#CP1CE1	CP1, electrolysis 1
#CP1MS1	CP1, material storage 1
#CP2	Chemical plant 2
#CP2AD1	CP2, administration
#CP2CS1	CP2, central storage 1
#PP1	Power plant 1
#PP1PD0	PP1, distribution
#PP1PG1	PP1, generation 1
#PP1PG2	PP1, generation 2

Figure 2 — Conjoint designation, designation principle

5.3 Designation of technical objects

5.3.1 Reference designation

5.3.1.1 Aspects

The reference designation identifies objects for the purpose of correlating information about an object among different kinds of documents and the products implementing the system.

A system, and each constituent object, can be viewed in many ways, called “aspects” (see Figure 3).

Questions:

— What does the object do? (function aspect)

— How is the object constructed? (product aspect)

— Where is the object located? (location aspect)

NOTE In IEC 81346-1, the aspect type “other aspect” is introduced together with the prefix sign “#”. This aspect type is applied in this part of ISO 81346 as “conjoint designation”, see 5.2.

© ISO 2012 – All rights reserved
Documents
Document Sharing Hub
Full document details: PD ISO/TS 81346-3:2012

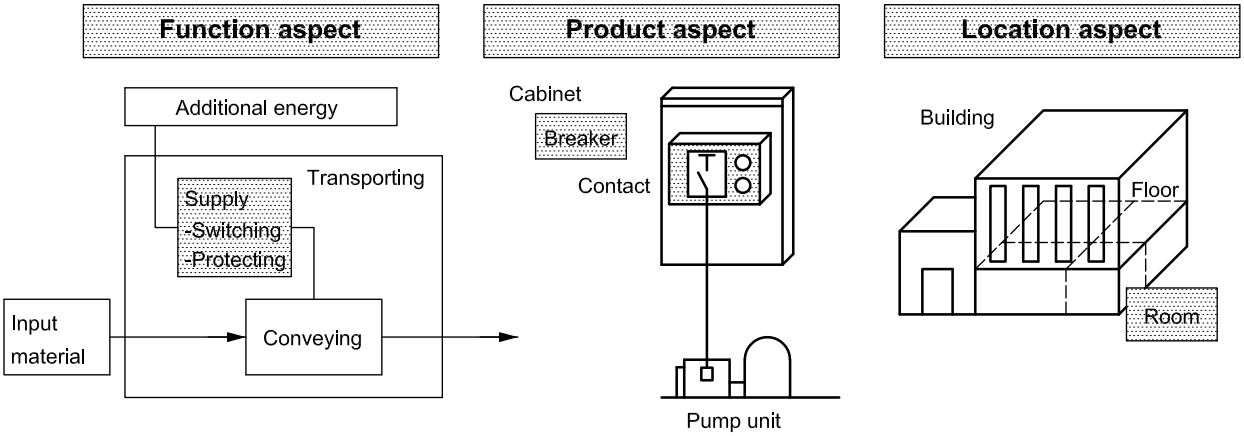

Explanations:

— Materials are to be conveyed in a transport process. This task requires electrical energy, which shall be switched by a control. The equipment shall be protected from the effects of short circuit and overload (function aspect).

— A breaker with contacts is part of a cabinet (product aspect).

— A building with floors contains a number of rooms (location aspect).

Figure 3 — Aspects

© ISO 2012 – All rights reserved

Documents
Document Sharing Hub
Full document details: PD ISO/TS 81346-3:2012

5.3.1.2 Structures

With respect to the three types of aspects considered in 5.3.1.1, and following the rule of constituent objects, three independent structures can be generated (see Figure 4).

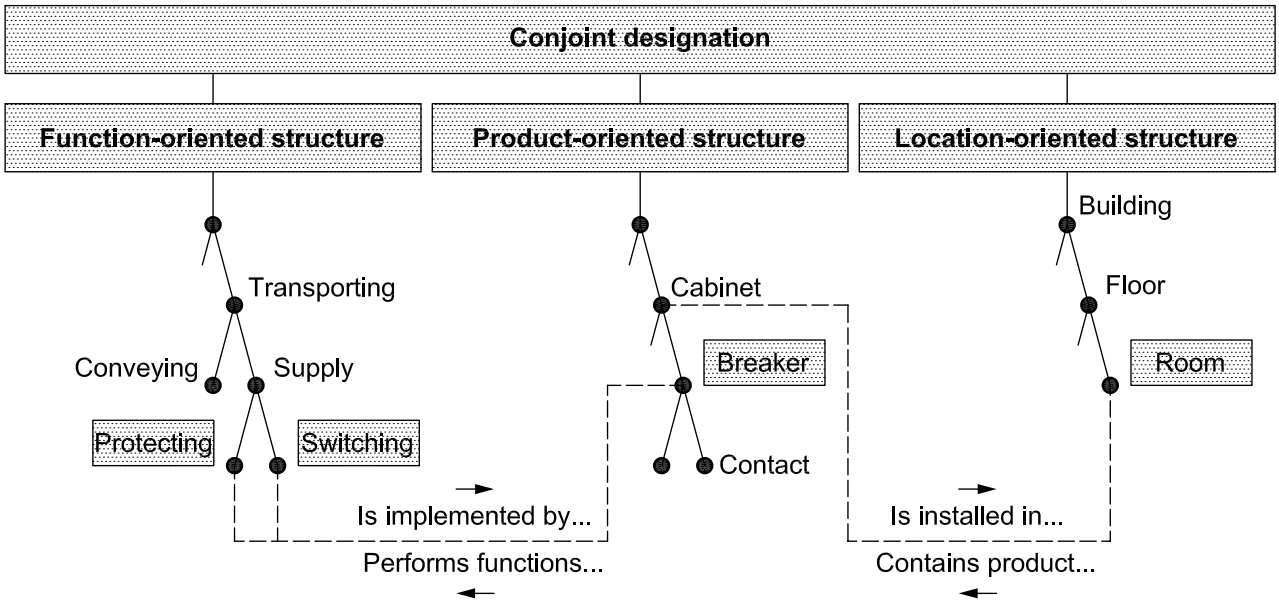

Explanations:

The relations of objects (represented by nodes) within one structure tree are partitive relations, e.g.

— the cabinet consists of the breaker, etc.; the breaker consists of contacts, etc.;

— the contact is a constituent of the breaker, the breaker is a constituent of the cabinet.

The relations of objects (represented by nodes) between different structure trees are associative (pragmatic) relations (indicated by dotted lines); these open numerous options for the extraction of comprehensive information regarding the plant, e.g.

— the basic tasks of switching and protecting are implemented with a breaker: this device is part of a cabinet, which is installed in a certain room on a floor of a building;

— a room contains cabinets with breakers, one of which performs the functions of switching and protecting within the transporting process.

Figure 4 — Structures and relations

5.3.2 Designation of function-oriented structure

The function aspect shall be based on the purpose of the system, without necessarily taking into account the products used to fulfil this purpose or their location.

An additional aspect of the function type enables distinction to be drawn between, e.g.:

— functional units with dynamic effects,

— the control function view,

— the energy supply function view.

A precise definition shall be documented in the sector-specific parts of this International Standard.

© ISO 2012 – All rights reserved
Documents
Document Sharing Hub
Full document details: PD ISO/TS 81346-3:2012

The designation based on the function aspect is preferably performed in the early planning phase of a project without taking implementation into account. Normally, this type of designation is first used by the planner of the overall process (top-down approach).

5.3.3 Designation of product-oriented structure

The product aspect shall be based on the way in which a system is implemented, constructed or delivered, without necessarily taking into account functions and/or locations.

The designation based on the product aspect is, for example, used for assemblies, indicating the way an assembly is built up from its parts without necessarily taking into account the functions and/or locations.

An additional aspect of the product type enables a distinction to be made for purposes to be defined in supporting documentation.

5.3.4 Designation of location-oriented structure

The location aspect shall be based on the topographical layout of a system, without necessarily taking into account products and/or functions.

An additional aspect of the location type enables a distinction to be drawn between

— the designation of locations within design modules (installation aspect) as well as designation of locations on machinery components (mounting aspect), and

— the designation of the plant topology (erection aspect).

The designation based on the location aspect is preferably used for the designation of objects which fulfil the task of providing locations for other objects. The plant designer normally uses this type of designation for assigning the equipment parts to their locations (i.e. installation, mounting, set-up).

5.3.5 Designation of objects using different aspects

It is often expedient to use different aspects for the same object. Different aspects of successive objects may be used by making a transition from one aspect to another.

The most frequent application of this method is the transition from the function to the product aspect when a function is completely implemented by a product, and when there is no sub-product that by itself completely implements the function.

Figure 5 shows the transition from the function aspect to the product aspect, and presents the difference between transition and allocation.

© ISO 2012 – All rights reserved

Documents
Document Sharing Hub
Full document details: PD ISO/TS 81346-3:2012